CASTCONNEX®
innovative components for inspired designs

HOW TO SPECIFY:
ARCHITECTURAL TAPER™

GETTING READY: Visit www.castconnex.com and download

A. CAST CONNEX Architectural Taper (ART) Datasheet

B. CAST CONNEX Architectural Taper (ART) 2D and 3D Assets (CAD/BIM)

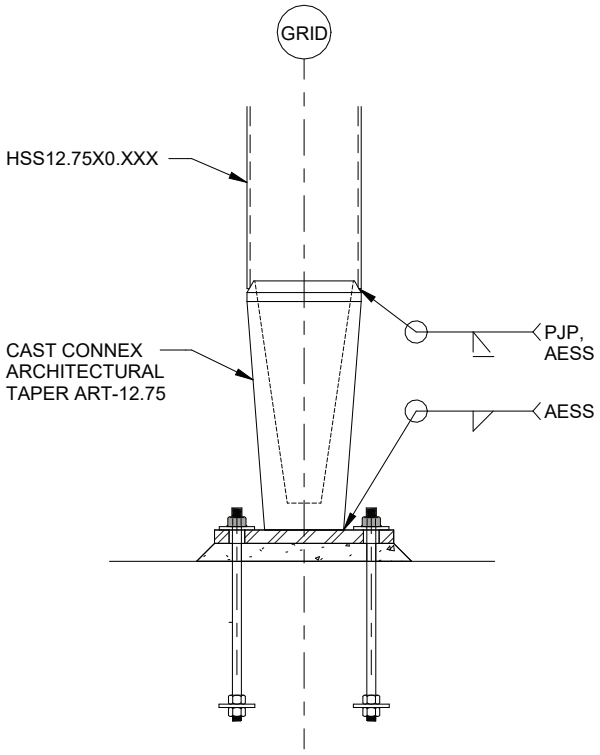

BASE DETAIL

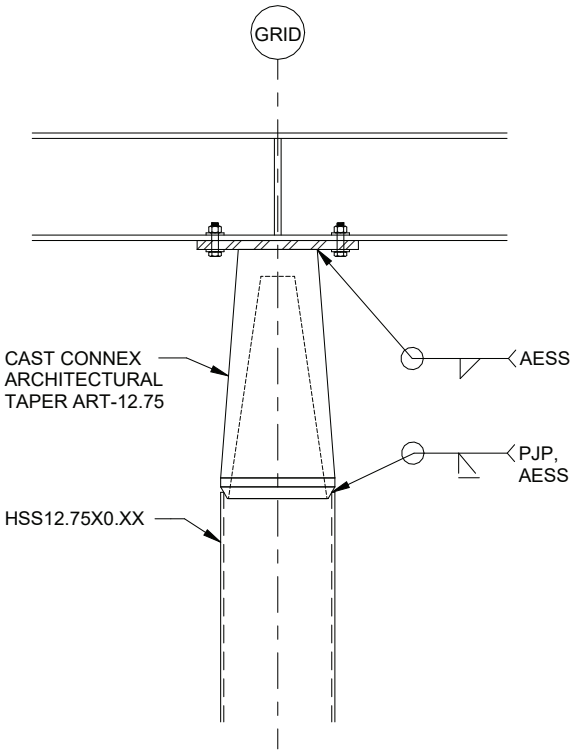

TOP DETAIL

PRODUCT SELECTION

Select an ART with a D_1 outer diameter that matches the outer diameter of the connecting round HSS or Pipe. Refer to the ART Datasheet for casting sizes.

If a corresponding ART size is not listed, adjust the HSS or Pipe size to match, or contact a CAST CONNEX representative to explore alternative solutions.

CONNECTION

Design and specify the weld between:
1) the ART and round HSS or Pipe, and
2) the D_2 end of the ART and the adjacent structural element.

Include architecturally exposed structural steel (AESS) requirements, if applicable. Refer to the ART Datasheet for a typical assembly.

LOADING

Confirm the available axial, flexural, and shear strengths of the ART meet or exceed the design loads. Refer to the ART Datasheet for a summary of the capacity checks used to determine the nominal strengths reported in the design table.

Consider ART strengths are for single-action loading. Consider combined action of forces.

DESIGN DRAWINGS & SPECIFICATION

Include a detail of the connections to the ART on the design drawings. Use the ART 2D and 3D Assets (CAD/BIM) to get started.

Call out: "CAST CONNEX ARCHITECTURAL TAPER ART-XX.XX"

Include Structural Cast Steel Components specification language in the contract specification document for the ART. Sample specification language, suitable for Division 05 - Metals, is available upon request at www.castconnex.com.