ENVOLÉE DOUBLE BOURGOGNE PENDANT

PRODUCT PHOTOGRAPHY

CARLYLE COLLECTIVE

JENNIFER MIDOZ



ENVOLÉE DOUBLE BOURGOGNE PENDANT

TECHNICAL DRAWINGS, MATERIALS AND SPECIFICATIONS

CARLYLE COLLECTIVE

JENNIFER MIDOZ

DIMENSIONED DRAWINGS

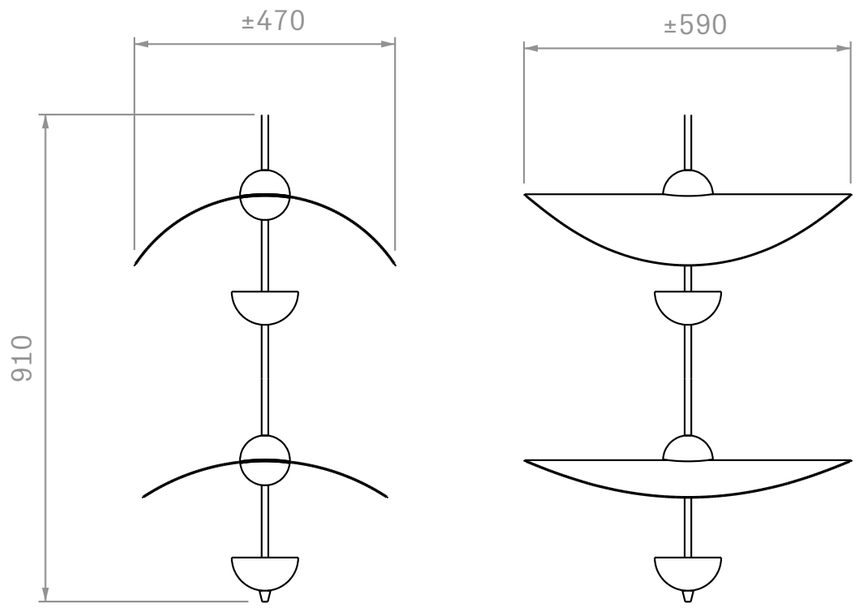

PRODUCT SPECIFICATIONS

MATERIALS

Brass

FINISHES

Porcelain bisque finish Porcelain finish Pale gold White nickel Black nickel

LIGHT SOURCE

2 x 24V LED disc, 15 Watts, dimmable, class 3 Driver necessary CE certification or US wired, all components are UL listed, UL Certification on request.

DIMENSIONS & WEIGHT*

W ±470 x D ±590 x H 910 mm, 18 kg Custom

Manufacturer drawings and specifications preserved from the supplied tear sheet.