CROSS BITUME WALL SCONCE

PRODUCT PHOTOGRAPHY

CARLYLE COLLECTIVE

JENNIFER MIDOZ







CROSS BITUME WALL SCONCE

TECHNICAL DRAWINGS, MATERIALS AND SPECIFICATIONS

CARLYLE COLLECTIVE

JENNIFER MIDOZ

DIMENSIONED DRAWINGS

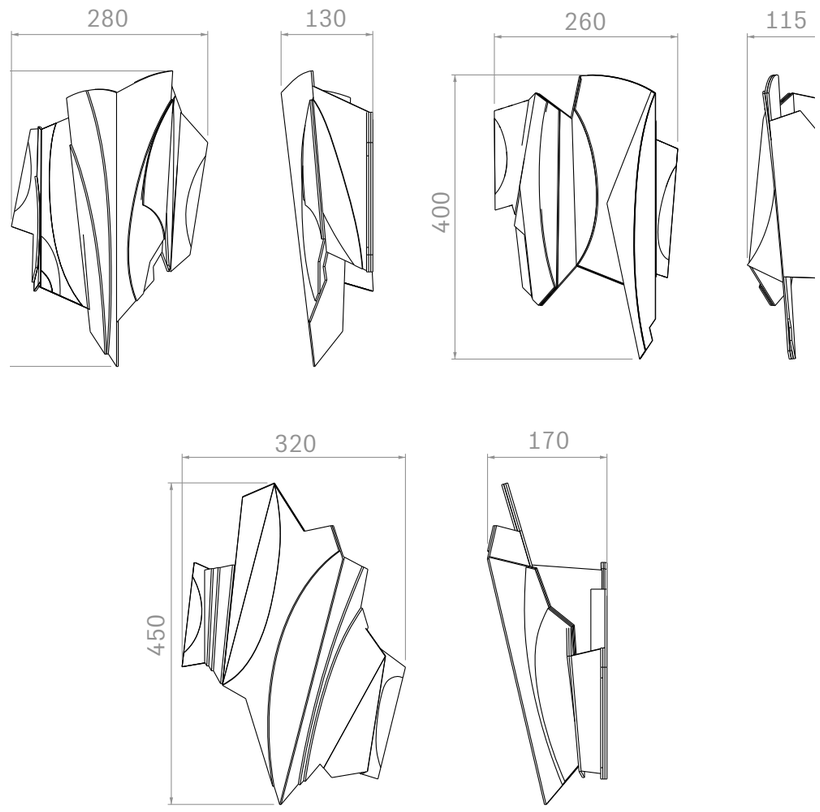

PRODUCT SPECIFICATIONS

MATERIALS

Brass

FINISHES

Polished pale gold Polished white nickel Polished black nickel

LIGHT SOURCE

24V LED strip, 5 Watts, dimmable, class 3 Driver necessary CE certification or US wired, all components are UL listed, UL Certification on request.

DIMENSIONS & WEIGHT*

01: W 280 x D 130 x H 420 mm, 5 kg 02: W 260 x D 115 x H 400 mm, 5 kg 03: W 320 x D 170 x H 450 mm, 5 kg

Manufacturer drawings and specifications preserved from the supplied tear sheet.