BRUME II SUSPENSION

PRODUCT PHOTOGRAPHY

CARLYLE COLLECTIVE

JENNIFER MIDOZ



BRUME II SUSPENSION

TECHNICAL DRAWINGS, MATERIALS AND SPECIFICATIONS

CARLYLE COLLECTIVE

JENNIFER MIDOZ

DIMENSIONED DRAWINGS

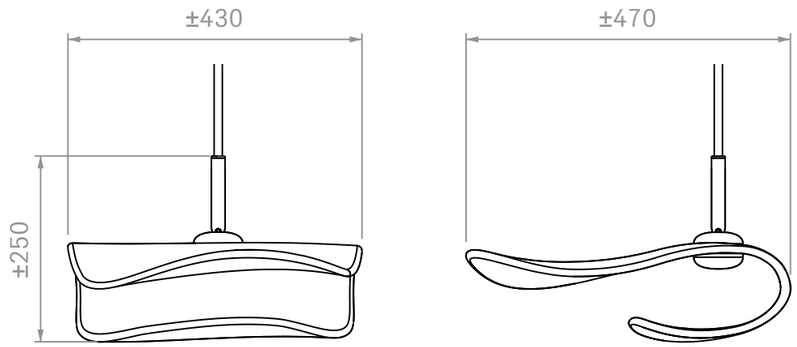

PRODUCT SPECIFICATIONS

MATERIALS

Blown glass and brass

FINISHES

Blown glass (various colors) Polished pale gold Polished white nickel Polished black nickel

LIGHT SOURCE

24V LED disc, 5 Watts, dimmable, class 3 Driver necessary CE certification or US wired, all components are UL listed, UL Certification on request.

DIMENSIONS & WEIGHT*

W ±430 x D ±470 x H ±250 mm, 12 kg

Manufacturer drawings and specifications preserved from the supplied tear sheet.