VALE ARMCHAIR

CARLYLE COLLECTIVE

BY JORDAN CARLYLE



FRONT PERSPECTIVE



BACK VIEW

VALE ARMCHAIR

OVERALL ELEVATIONS AND PRINCIPAL DIMENSIONS

CARLYLE COLLECTIVE

BY JORDAN CARLYLE

FRONT AND SIDE ELEVATIONS

FRONT VIEW

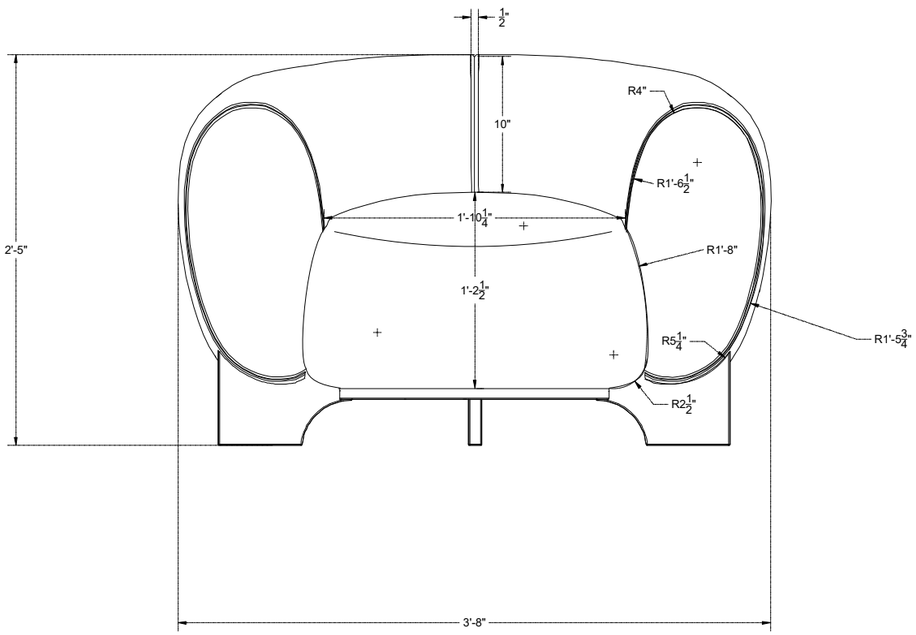

SIDE

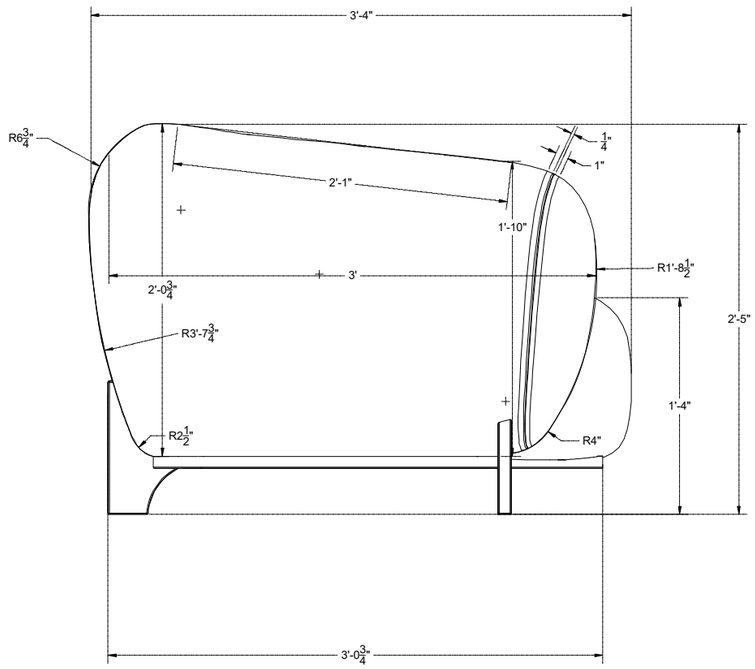

DIMENSION SCHEDULE

Overall width	44 in
Overall depth	40 in
Overall height	29 in
Seat height	16 in

SOURCE NOTE

All detailed dimensions and angles are retained on the following sheets.

Source CAD file dated 30 August 2026.