SADDLE ARMCHAIR

PRODUCT PHOTOGRAPHY & SPECIFICATIONS

CARLYLE COLLECTIVE

BY ARTICOLO



DIMENSIONS

32" (81.3 cm) · 32" (81.3 cm) · 25.6" (65 cm) · 15.7" (39.9 cm) · 27" (68.6 cm) · 29.9" (75.9 cm)

SPECIFICATIONS

Lead time: 12 - 14 weeks

FINISHES

Finishes: Leather with Walnut & Linen
Care & maintenance: Refer to Materials & Care Guide on website resources page

SADDLE ARMCHAIR

DIMENSIONED DRAWINGS & FINISHES

CARLYLE COLLECTIVE

BY ARTICOLO

ARMCHAIR

LEATHER, WALNUT & LINEN

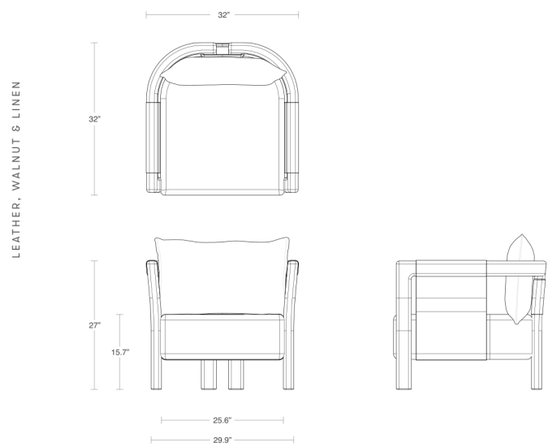

OTTOMAN

LEATHER, WALNUT & LINEN

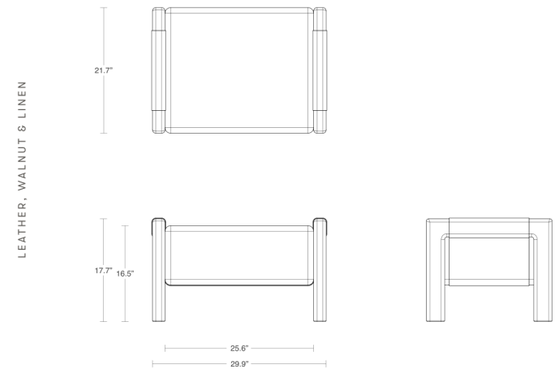

BENCH

LEATHER, WALNUT & LINEN

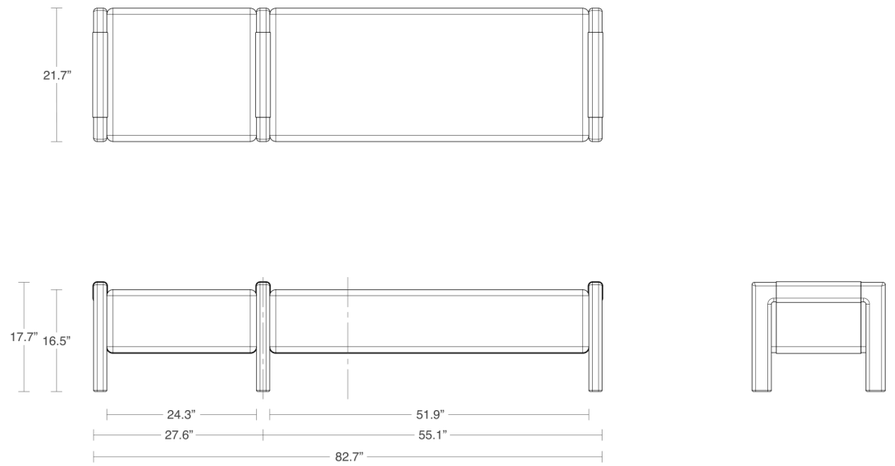

FINISHES

Finishes: Leather with Walnut & Linen

Care & maintenance: Refer to Materials & Care Guide on website resources page