SLAB WALL SCONCE

PRODUCT PHOTOGRAPHY & SPECIFICATIONS

CARLYLE COLLECTIVE

BY ARTICOLO



DIMENSIONS

Full dimensions are shown on the dimensioned drawings on Sheet 2.

LIGHT SOURCE

4.3W LED Board 2700k warm white 400 lumens 90+ CRI Dimmable

SPECIFICATIONS

Lead time: 8 - 10 weeks
Weight: 11.5 lb
Installation: Supplied with external driver and mounting plate to fit 4.0 square Jbox Tea
Warranty: 3 years

FINISHES

Compliance: ADA Compliant
Fittingfinish: Brass, Bronze*, Satin Nickel, Black Electroplate, *As Bronze is a hand applied finish,, the depth of colour will vary
Shade colours: Fizi, Drunken Emerald, Abyss, *Please note: Shade dimensions inclusive, of overall height may vary marginally, due to the nature of mouth blown glass.
Accessories: Accessories, including custom arms, anchoring brackets, and subtle clips, securing pendants and wall sconces in place are available for harsh environments (such as strong wind locations, tropical weather) and ocean-going vessels.

SLAB WALL SCONCE

DIMENSIONED DRAWINGS & FINISHES

CARLYLE COLLECTIVE

BY ARTICOLO

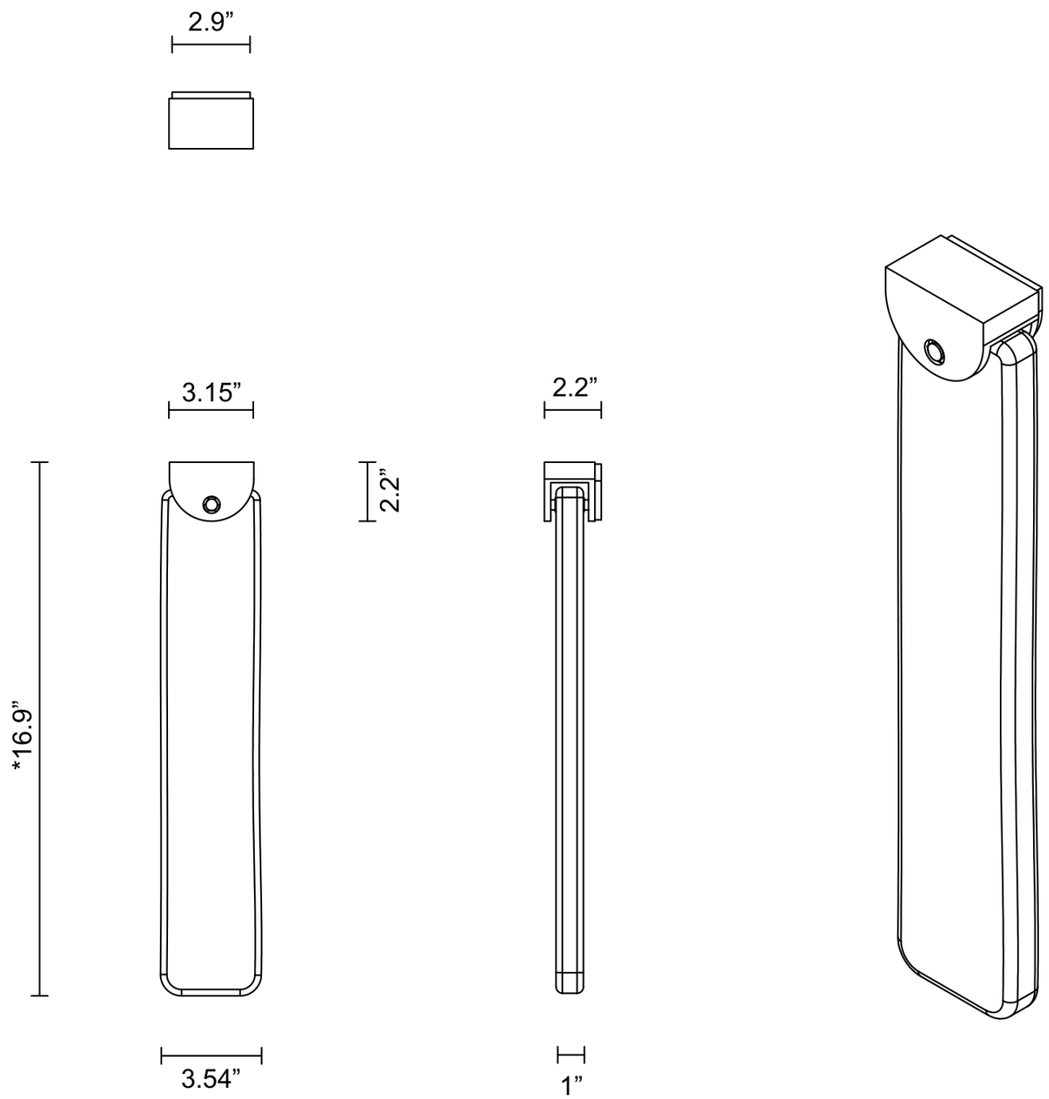

26V1

FINISHES

Compliance: ADA Compliant
Fittingfinish: Brass, Bronze*, Satin Nickel, Black Electroplate, *As Bronze is a hand applied finish,, the depth of colour will vary
Shade colours: Fizi, Drunken Emerald, Abyss, *Please note: Shade dimensions inclusive, of overall height may vary marginally, due to the nature of mouth blown glass.
Accessories: Accessories, including custom arms, anchoring brackets, and subtle clips, securing pendants and wall sconces in place are available for harsh environments (such as strong wind locations, tropical weather) and ocean-going vessels.