HERA

BATHTUB

CARLYLE COLLECTIVE

BY IL GRANITO





SPECIFICATIONS

Type: Freestanding bathtub in natural stone
Size: 1800 × 800 × 600 mm
Interior: 1700 × 700 mm

FINISHES — NATURAL STONE

Arabescato — honed
Calacatta Viola — honed
Bianco Carrara — honed
Nero Marquina — honed
Verde Alpi — honed
Grigio Veneto — honed
Travertino Classico — honed + resin filled
Travertino Rizzi — invecchiato + grout filled
Travertino Rizzi — honed + resin filled
Travertino Silver — honed + resin filled

NOTES

Faucet(s) not included.
Other sizes and natural stone on demand.

HERA

BATHTUB

CARLYLE COLLECTIVE

BY IL GRANITO

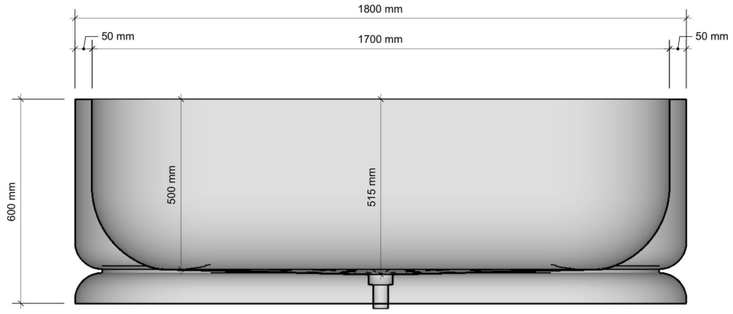

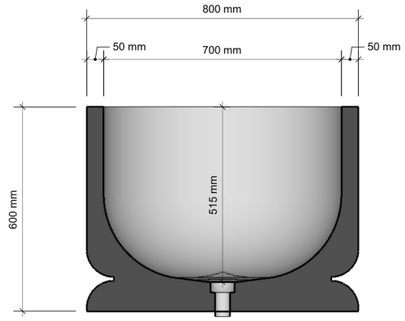

HERA — SECTIONS

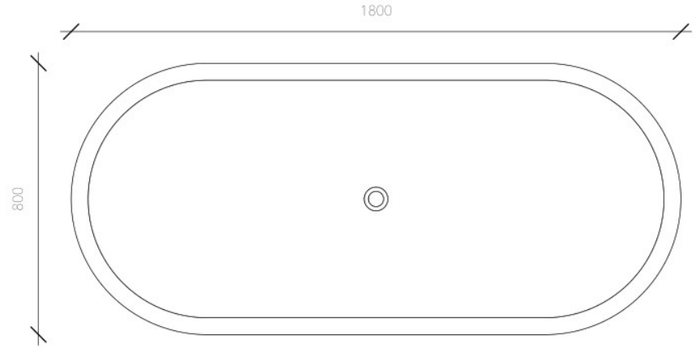

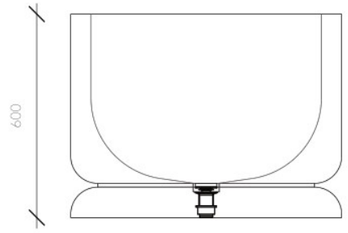

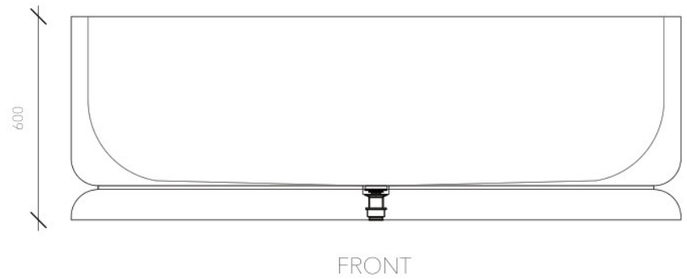

HERA — TOP, FRONT AND SIDE

FINISHES — NATURAL STONE: Arabescato — honed · Calacatta Viola — honed · Bianco Carrara — honed · Nero Marquina — honed · Verde Alpi — honed · Grigio Veneto — honed · Travertino Classico — honed + resin filled · Travertino Rizzi — invecchiato + grout filled · Travertino Rizzi — honed + resin filled · Travertino Silver — honed + resin filled