DELANO | SOFA

PRODUCT PHOTOGRAPHY & SPECIFICATIONS

SPECIFICATIONS

Width 130½ in (331.5 cm)
Depth 47½ in (120.7 cm)
Height 33 in (83.8 cm)

MATERIALS & FINISHES

- Mohair back and armrests
- Mohair seat
- Silvered bronze base





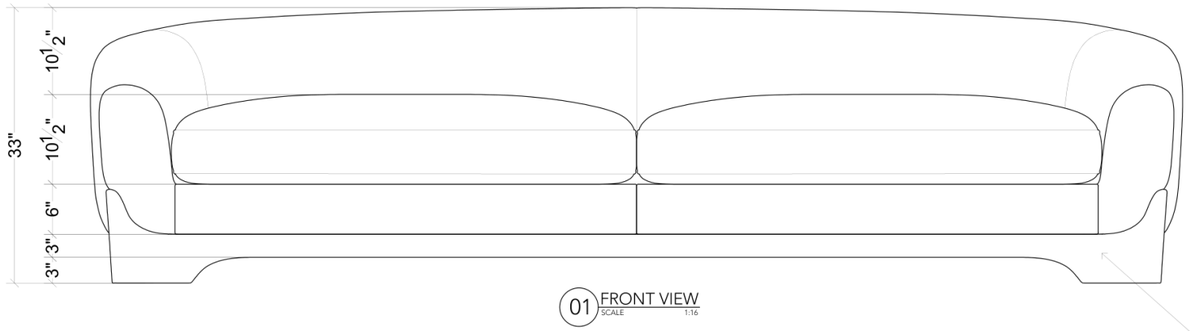

01 FRONT VIEW
SCALE 1:16

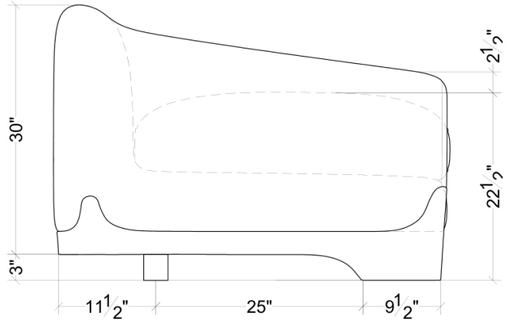

04 SIDE VIEW
SCALE 1:16

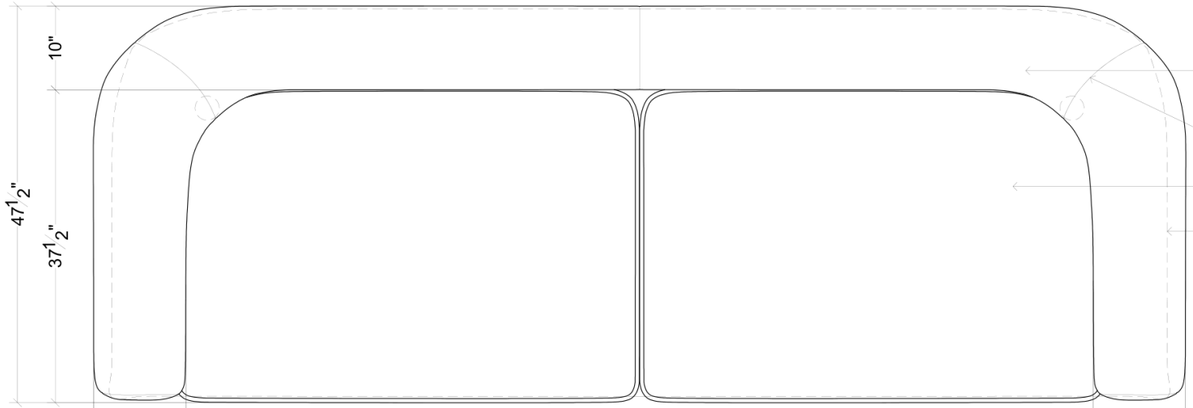

02 TOP VIEW
SCALE 1:16

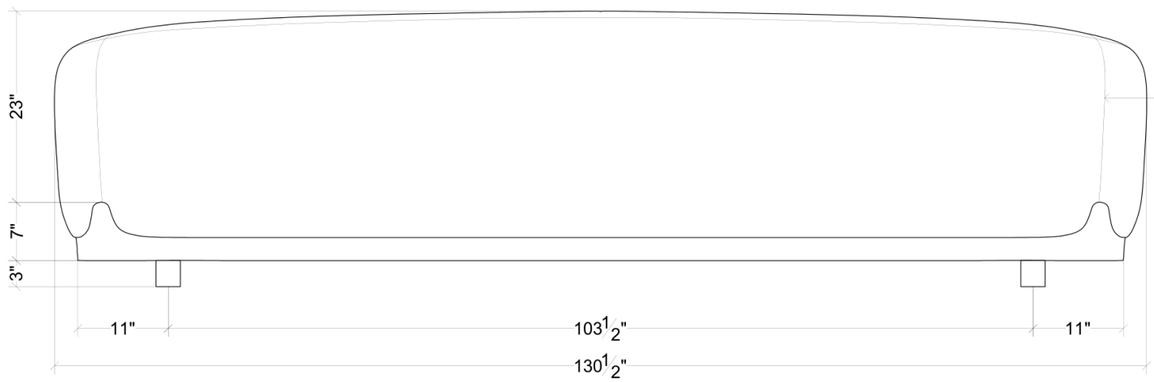

03 REAR VIEW
SCALE 1:16

SILVERED BRONZE BASE

MOHAIR BACK AND ARMRESTS

SEAM LINE LOCATION

MOHAIR SEAT

SEAM LINE LOCATION

SEAM LINE LOCATION



The copyright and other intellectual property rights in all material and content on this presentation and the organization and layout of the presentation is owned by Carlyle Collective and/or its licensor.