GIO | SOFA

PRODUCT PHOTOGRAPHY & SPECIFICATIONS

CARLYLE COLLECTIVE

BY HESSENTIA



DESCRIPTION

Gio is a sofa with sinuous shapes and strong lines, that express a vigorous appearance. Gio has been designed to transform a living area into a young and welcoming place.

SPECIFICATIONS

Materials: Fabric, Leather

Design: Luca Erba - 2021

Dimensions:

265 W x 102 D x 70 H cm (GIO.2300)
300 W x 102 D x 70 H cm (GIO.2400)
335 W x 102 D x 70 H cm (GIO.2500)

GIO.2300

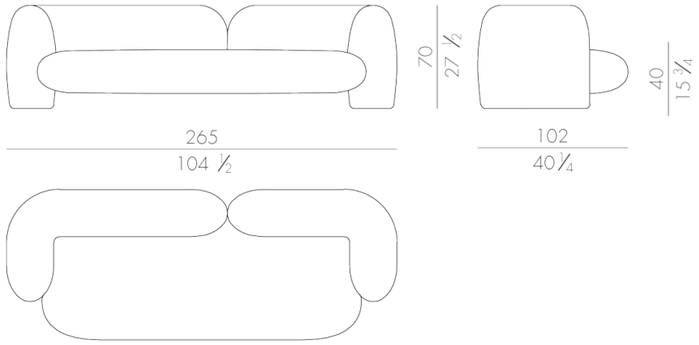

GIO.2400

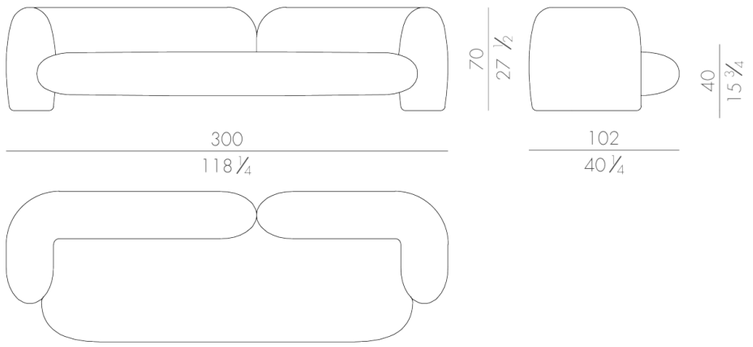

GIO.2500

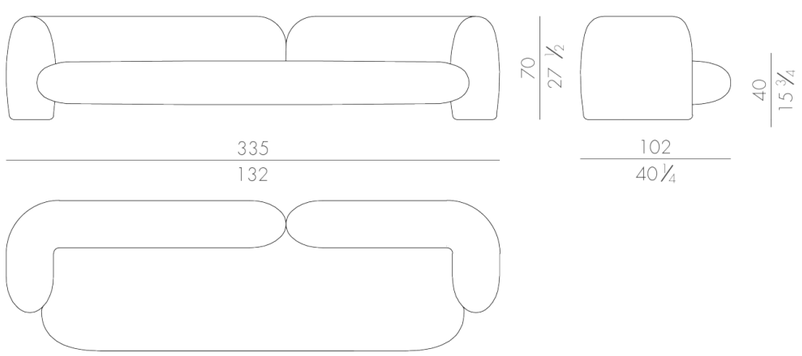

CT.5050/GIO

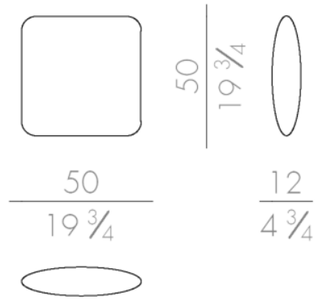

CT.6535/GIO

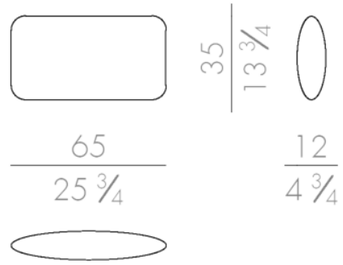

Leather cushion

CP.5050/GIO

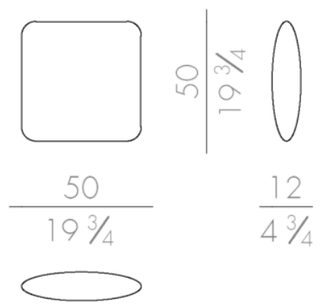

CP.6535/GIO

