ORYN | LOUNGE CHAIR

PRODUCT PHOTOGRAPHY & SPECIFICATIONS

CARLYLE COLLECTIVE

BY JORDAN CARLYLE

SPECIFICATIONS

Width 34½ in (87.6 cm)
Depth 35½ in (90.2 cm)
Height 31 in (78.7 cm)

MATERIALS & FINISHES

- Mohair back
- Mohair seat
- Silvered bronze legs and frame



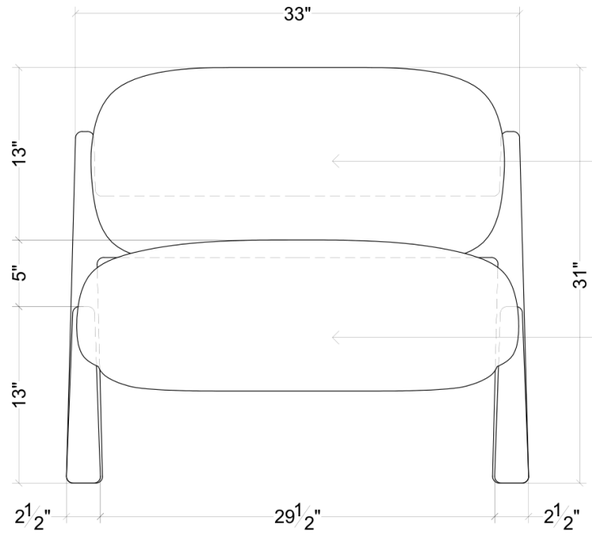

01 FRONT VIEW SCALE 1:10

MOHAIR BACK

MOHAIR SEAT

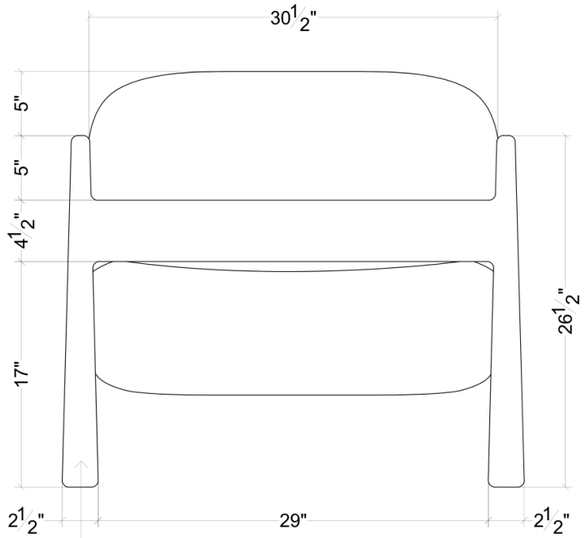

02 REAR VIEW SCALE 1:10

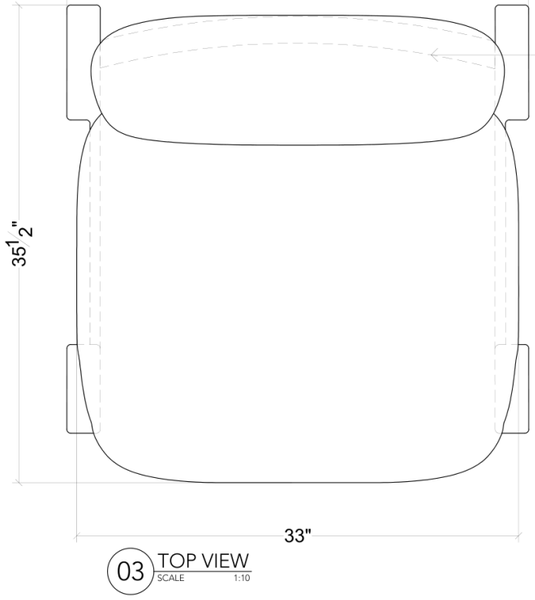

03 TOP VIEW SCALE 1:10

SILVERED BRONZE LEGS AND FRAME

DASHED LINE OF BRONZE FRAME



CONCEPT IMAGE

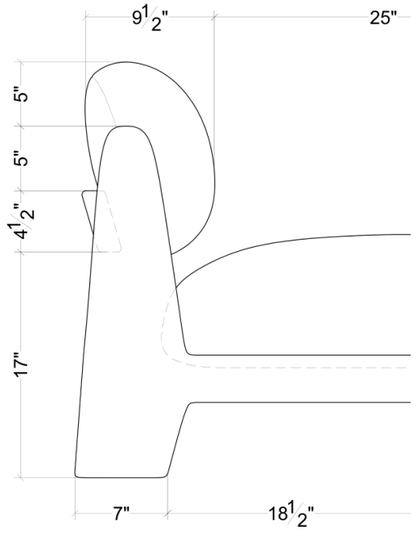

04 SIDE VIEW SCALE 1:10

The copyright and other intellectual property rights in all material and content on this presentation and the organization and layout of the presentation is owned by Carlyle Collective and/or its licensor.