TERRA | LOUNGE CHAIR

PRODUCT PHOTOGRAPHY & SPECIFICATIONS

CARLYLE COLLECTIVE
BY JORDAN CARLYLE

SPECIFICATIONS

Width 33½ in (85.1 cm)
Depth 35 in (88.9 cm)
Height 33½ in (85.1 cm)
Seat height 18 in (45.7 cm)

MATERIALS & FINISHES

- Mohair back
- Mohair seat
- Bronze base





TERRA | LOUNGE CHAIR

DIMENSIONED DRAWINGS

CARLYLE COLLECTIVE

BY JORDAN CARLYLE

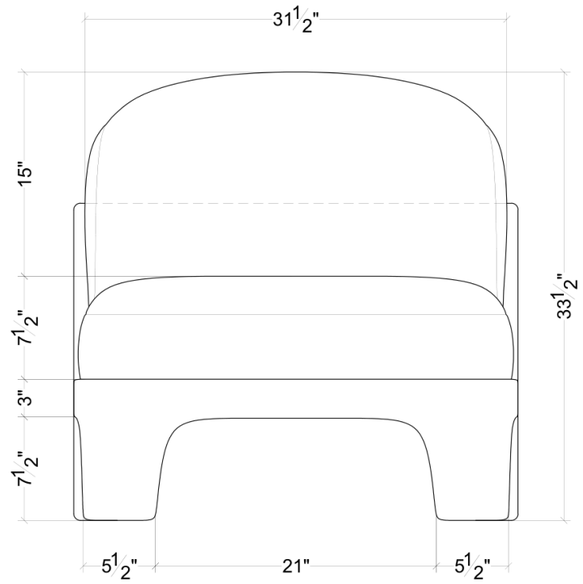

01 FRONT VIEW
SCALE 1:10

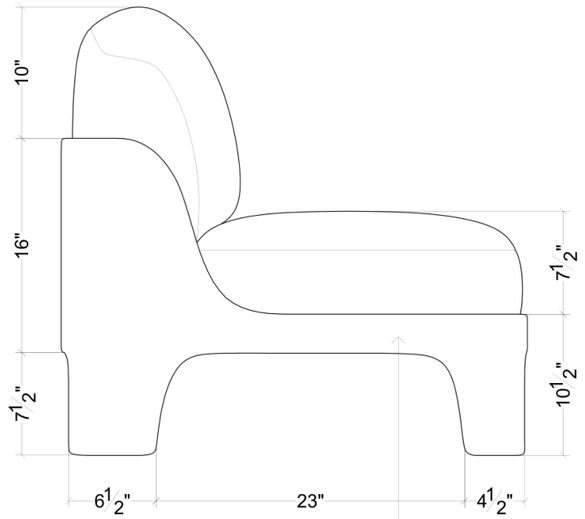

02 SIDE VIEW
SCALE 1:10

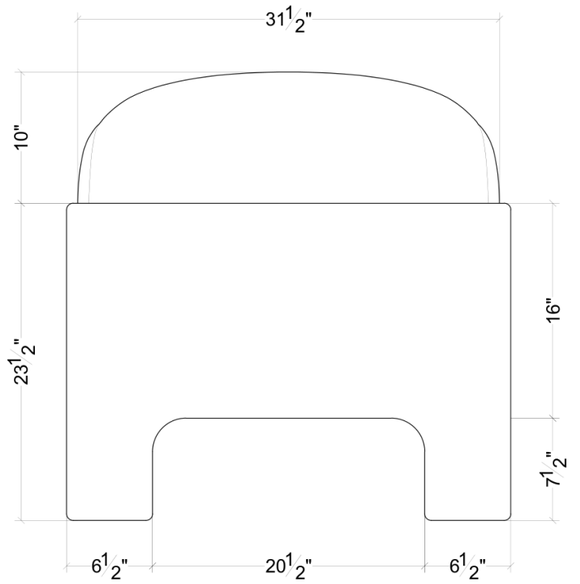

03 REAR VIEW
SCALE 1:10

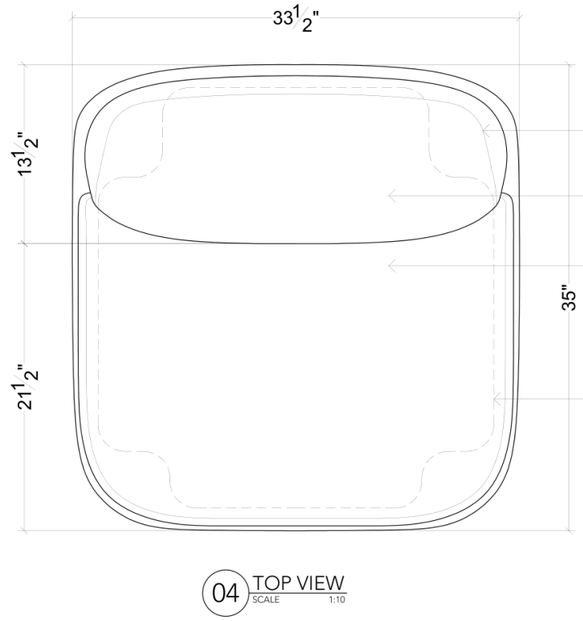

04 TOP VIEW
SCALE 1:10

BRONZE BASE

STITCHING SEAM LINE

MOHAIR BACK

MOHAIR SEAT

DASHED LINE OF
BRONZE FRAME



CONCEPT IMAGE

The copyright and other intellectual property rights in all material and content on this presentation and the organization and layout of the presentation is owned by Carlyle Collective and/or its licensor.