VERA | CHAISE

PRODUCT PHOTOGRAPHY & SPECIFICATIONS

SPECIFICATIONS

Width 36½ in (92.7 cm)
Length 68½ in (174 cm)
Height 31½ in (80 cm)

MATERIALS & FINISHES

- Mohair back
- Mohair seat
- Silvered bronze metal feet





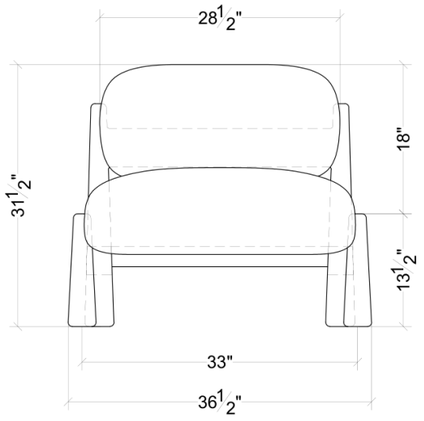

01 FRONT VIEW
SCALE 1:16

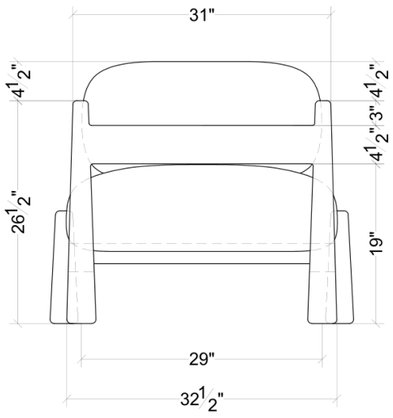

02 REAR VIEW
SCALE 1:16

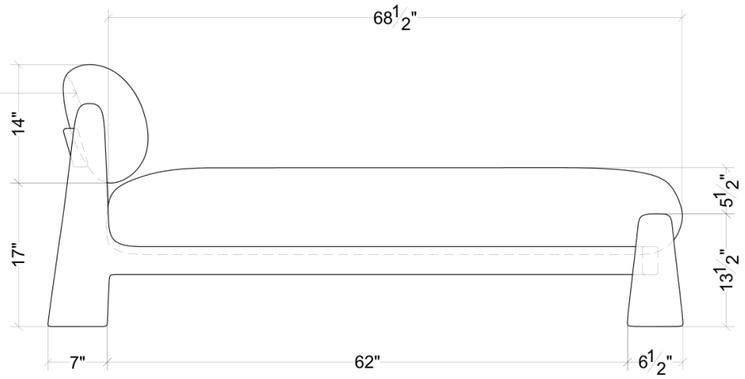

03 SIDE VIEW
SCALE 1:16

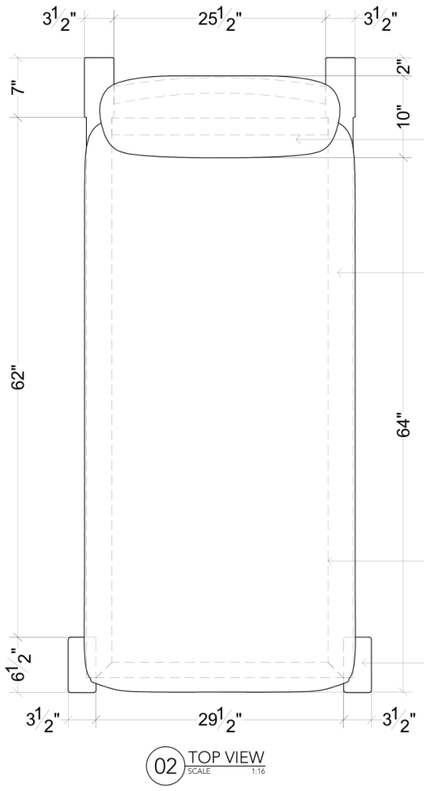

02 TOP VIEW
SCALE 1:16

SEAM LINE LOCATION

MOHAIR BACK

MOHAIR SEAT

DASHED LINE OF
THE BRONZE FRAME

SILVERED BRONZE METAL FEET



CONCEPT IMAGE

The copyright and other intellectual property rights in all material and content on this presentation and the organization and layout of the presentation is owned by Carlyle Collective and/or its licensor.