TALLIS | WALL SCONCE

PRODUCT PHOTOGRAPHY & SPECIFICATIONS

CARLYLE COLLECTIVE

BY MARTIN HUXFORD



The Tallis wall sconce is tall, modern and elegant with its innovative combination of natural beauty and minimalism. The design highlights the contrast between the architecturally crisp linear frame of solid bronze, with the curved, translucent central section of illuminated alabaster. Adding natural beauty to an interior, the delicately veined alabaster has been carefully worked into a long central convex curve, and is an artful contrast of form and texture with the architectural rigour of the linear bronze frame.

Shown in: Bronze

DIMENSIONS · TALLIS

Height: 62 cm (24.5")
Width: 18.5 cm (7")
Depth: 8 cm (3")
Weight: 5 kg (11 lbs)

DIMENSIONS · TALLIS XL

Height: 112 cm (44")
Width: 18.5 cm (7")
Depth: 8 cm (3")
Weight: 10 kg (22 lbs)

FINISHES

Satin brass, antique brass, bronze

MATERIALS

Alabaster, solid brass, powder coated steel

DIMMING

Triac leading or trailing edge

LAMPING

Integrated 5W/10W LED light strip 12V
Requires 12V 10/20W constant voltage LED driver mounted in back box or wall cavity

Handmade in England

TALLIS | WALL SCONCE

DIMENSIONED DRAWINGS

CARLYLE COLLECTIVE

BY MARTIN HUXFORD

TALLIS WALL LIGHT

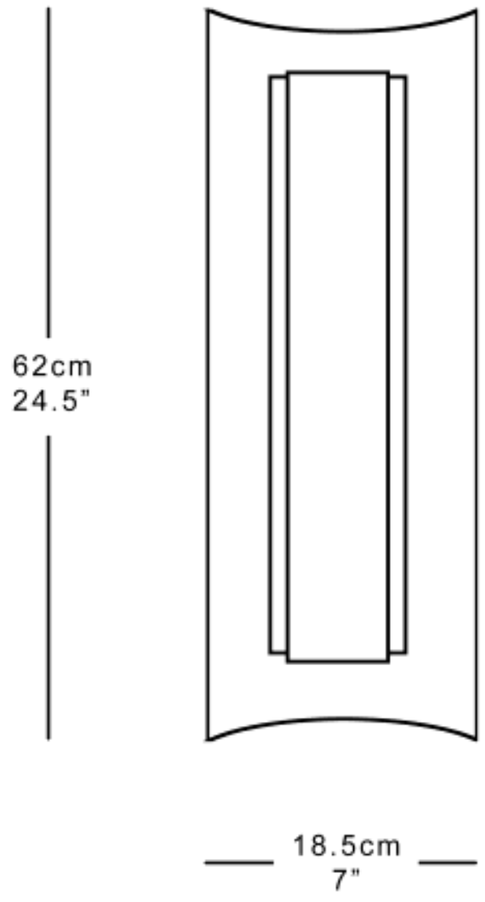

TALLIS XL WALL LIGHT

