DIVERGENT | SOFA

PRODUCT PHOTOGRAPHY & SPECIFICATIONS

CARLYLE COLLECTIVE

BY MARTA DELGADO



The Divergent Sofa defies the ordinary. It fragments the standards and preconceptions of what a sofa looks and feels like. Through captivating geometry and faceted surfaces, the long and deep seat is assuredly soft, the intriguing backrest is conceived for different heights and body types, while the piping keeps the edges sharp. The mirroring metal structures offer a lightness to its volume. It's a celebration for those who don't fit in, the divergent ones.

AS PICTURED
Upholstery: Olive velvet.
Footer and Back Detail: Stainless Steel in polished finishing.

DIMENSIONS
Width: 94.5" | 240 cm
Depth: 32.7" | 83 cm
Height: 31.5" | 80 cm
Seat Height: 15.7" | 40 cm
Seat Depth: 23.2" | 59 cm
Suitable for custom sizes.

CLIENT'S OWN MATERIAL (COM) REQUIREMENTS
334.6" | 8.5 m
* requirements based on plain fabric with a standard width of 55.1" | 1.4 m

WEIGHT
198.4 lbs | 90 kg
Packed: (wooden case)
540 lbs | 245 kg

VOLUME
59.2 ft3 | 1.59 m3
Packed: (wooden case)
76.1 ft3 | 2.2 m3

STRUCTURE FEATURES
Frame in solid wood. Upholstery with straps. Foam in 100% PU with BS standard fire specifications. Combustion Modified High Resilience Foam. Foam in American Standard CAL 117 for the USA. Fire retardant interlining is available on request.

REFERENCE
MDS.SO.DIV

DIVERGENT | SOFA

DIMENSIONED DRAWINGS

CARLYLE COLLECTIVE

BY MARTA DELGADO

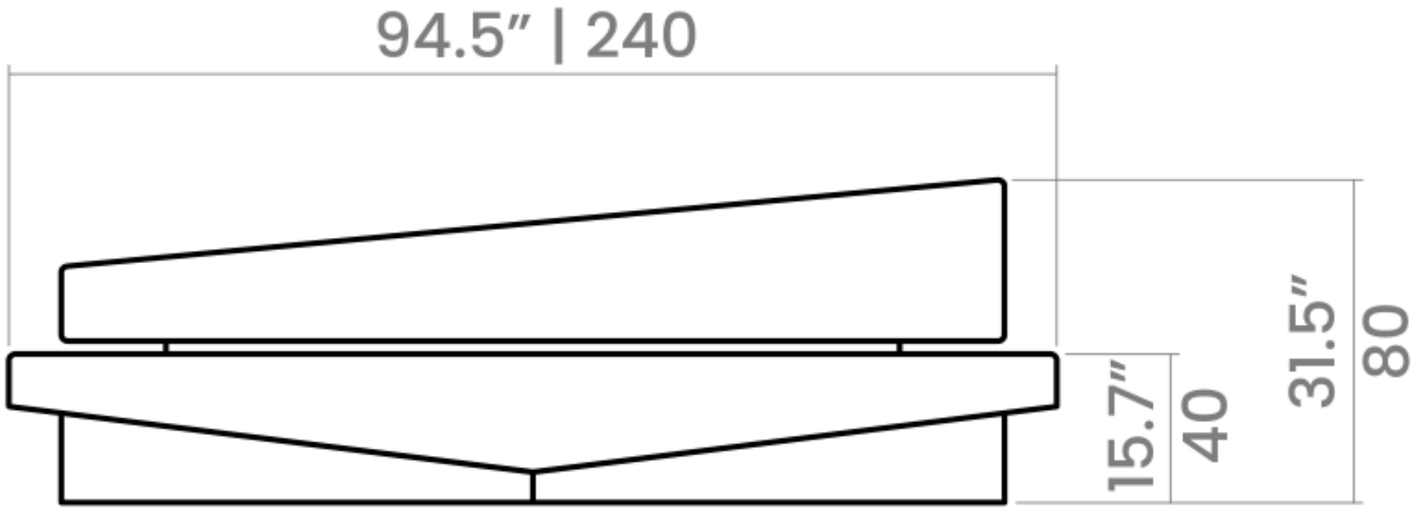

Front

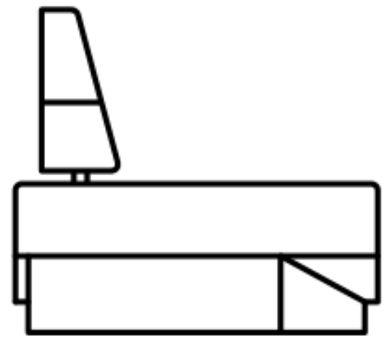

Left

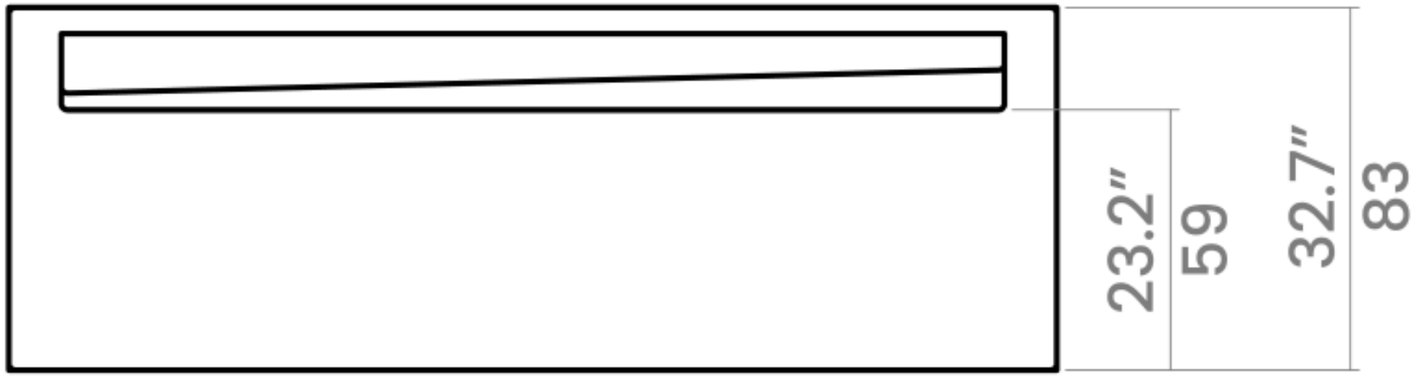

Top

Scale 1:50

Scale 1:50, as printed on the vendor sheet