PAMPUKH | BED

PRODUCT PHOTOGRAPHY & SPECIFICATIONS

CARLYLE COLLECTIVE

BY FAINA



MATERIALS
Textile, foam rubber, sintepon, wood

FRAME
Metal and wood frame; soft upholstered headboard and sideboards

MATTRESS
Not included; no lift mechanism

UPHOLSTERY
Not removable

SIZES
EU, mattress 1600 × 2000 mm: W 1870 × L 2350 × H 1000 mm (73.6" × 92.5" × 39.4")
EU, mattress 1800 × 2000 mm: W 2070 × L 2350 × H 1000 mm (81.5" × 92.5" × 39.4")
US, mattress 1520 × 2030 mm, 60" × 80": W 1790 × L 2380 × H 1000 mm (70.5" × 93.7" × 39.4")
US, mattress 1930 × 2030 mm, 76" × 80": W 2200 × L 2380 × H 1000 mm (86.6" × 93.7" × 39.4")

WEIGHT
Approximately 100 to 110 kg depending on size

RECOMMENDED LOAD
170 kg per sleeping place

COLORS
More than 100 colors in 5 categories.
See the finishes sheet.

USE
Indoor use only

LEAD TIME
8 to 10 weeks; made to order

PLEASE NOTE
Handcrafted; slight differences in shade and texture may occur.

PAMPUKH | BED

DIMENSIONED DRAWINGS

CARLYLE COLLECTIVE

BY FAINA

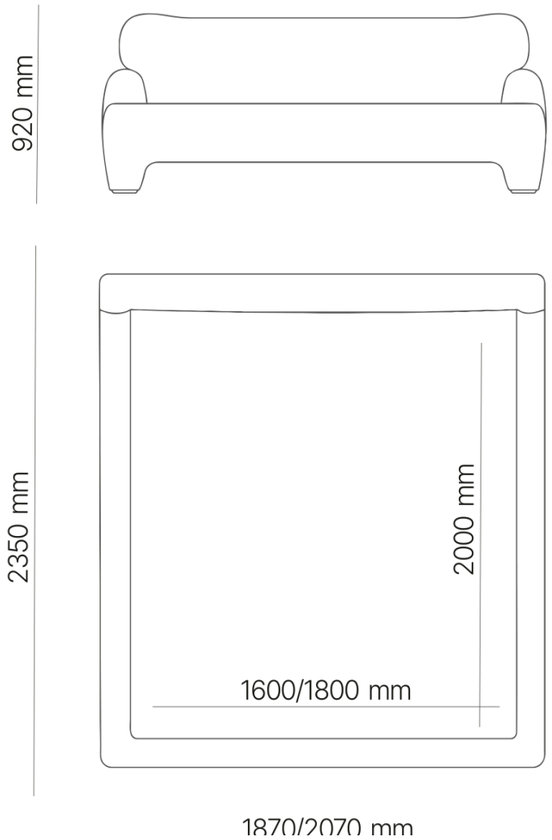

EU SIZES: MATTRESS 1600/1800 × 2000 MM

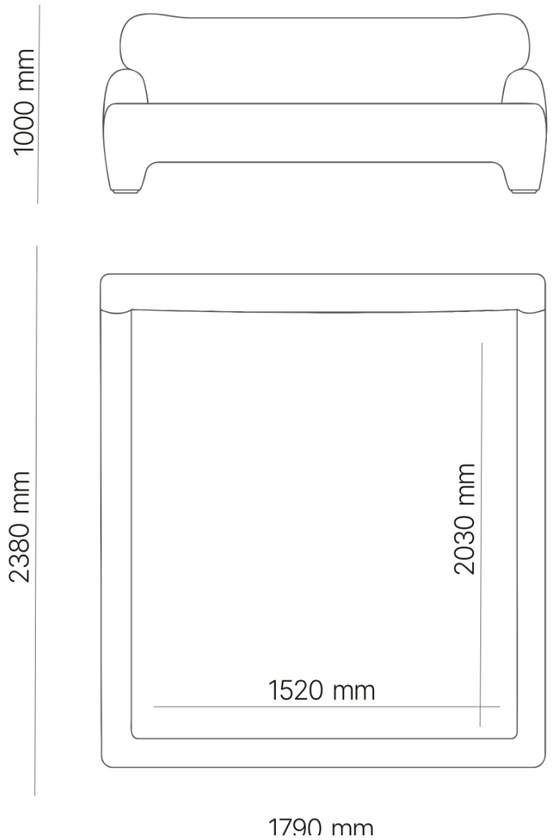

US: MATTRESS 1520 × 2030 MM (60" × 80")

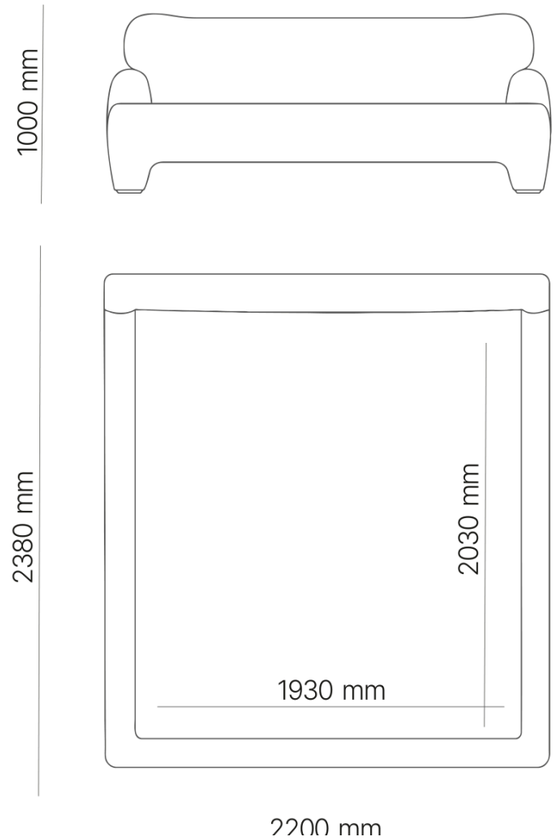

US: MATTRESS 1930 × 2030 MM (76" × 80")