www.hd-hyundaice.com

HD HYUNDAI CONSTRUCTION EQUIPMENT

Head Office(Sales Office)
11F, GLOBAL R&D CENTER, 477 BUNDANG SUSEO-RO, BUNDANG-GU, SEONGNAM-SI, GYEONGGI-DO, 13553, KOREA

PLEASE CONTACT

2025.MAR

HX60A

With TIER 4 FINAL Engine Installed

Gross Power	Net Power	Bucket Capacity	Operating Weight
48.5 kW / 65.9 HP	47 kW / 63.9 HP	0.18 m^3	5,990 kg/13,210 lb ~ 6,160 kg/13,580 lb

HD HYUNDAI CONSTRUCTION EQUIPMENT

WHAT'S NEWEST AND BEST

HX60A

THE BEST PRODUCTIVITY AND FUEL EFFICIENCY

- Tier 4 Final Engine
- Fuel efficiency
- Thumb Option
- Angle Dozer Option
- Heavy Counterweight Option

EASY CONTROL AND COMFORTABLE OPERATION

- 7-inch LCD Cluster with Flow Rate Control NEW
- Centralized Switch Console NEW
- Proportional Auxiliary Hydraulic System
- Aux. Hydraulic Line Pressure Control
- Pattern Change Valve with Better Accesibility
- Optimized Air Duct System
- Spacious & Comportable New Cabin
- Auto-Shift Travel Speed

THE ULTIMATE SAFE ENVIRONMENT

- Auto Safety Lock NEW
- Safety Belt Warning Alarm NEW
- Emergency Engine Stop Switch
- Travel Alarm
- LED Work Light & Beacon Lamp Option
- Boom and Arm Safety Valves Option
- Anti-theft System

NEW EXTERIOR DESIGN FOR ROBUSTNESS AND SAFETY

- ROPS/FOPS Cabin
- ROPS/FOPS Canopy Option
- OPG Level 2 (top) Option
- OPG Level 2 (front + top) Option
- Standard Boom/Arm/Bucket Cylinder Guard NEW
- New Designed Attachment For Durability
- Optimized Hydraulic Layout

SERVICEABILITY AND TELEMATICS

- Hi MATE NEW Option
  - Mobile Fleet App
- Fully Accessible MCV & Engine NEW
- 2-Piece Dozer Hose NEW

* Photo may include optional equipment.

THE BEST PRODUCTIVITY AND FUEL EFFICIENCY

HX A Series is equipped with eco-friendly, high-performance engines that meet the TIER 4 FINAL emission requirements.

TIER 4 FINAL Certified Engine

The new engine meets TIER 4 FINAL emission regulations without DPF and AdBlue, allowing for reduced maintenance costs for after-treatment devices.

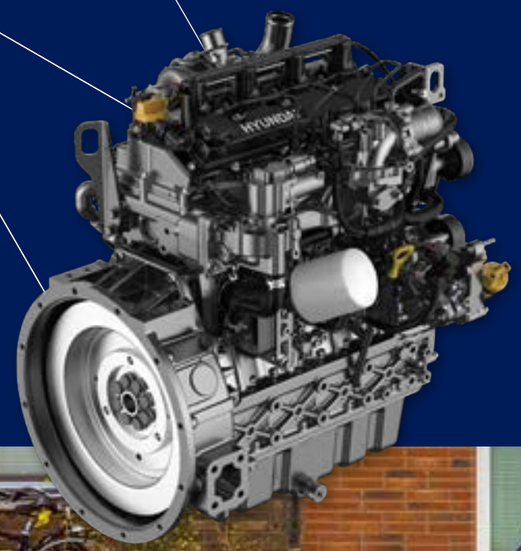

Optimal counterweight

Lifting force has been increased massively by installing a heavy counterweight. It also enables the best working stability in its class.

Improved engine cowl air vent

Increasing the vent hole of the engine cowl by 76% has improved engine cooling and durability and reduced noise.

Reinforced bushing application

Durability is enhanced by applying dimple bushing to the boom pin area.

Complete durability

A double layer air cleaner blocks dust from the engine, which optimises the air filter replacement and the engine's durability.

Optimal hydraulic pipeline layout

The hydraulic pipes are placed at the top of the boom to prevent damage when working in narrow trenches.

Seamless performance

By designing everything in-house, Hyundai has created the perfect synergy between engine and machine, with reduced noise and vibration enhancing operator comfort.

* Photo may include optional equipment.

NEW EXTERIOR DESIGN FOR ROBUSTNESS AND SAFETY

The true value of HX A Series lies in its durability and high productivity.
The robust upper and lower frame structure can endure external shock and heavy work loads.
Attachment performance has been proven through rigorous field testing. No matter how tough the working environment is, you can always rely on the HYUNDAI Excavator HX A Series.

* Photo may include optional equipment.

Max visibility

Visibility is key while working. That's why the HX60A is equipped with a rear-view camera as standard with the option of a side-view camera.

LED lamps

For added safety, LED lamps are used in all the worklights with the boom worklights recessed to help prevent damage when working.

Seat belt warning alarm

If the seat belt is not buckled when the ignition key is turned, an alarm is sounded, along with a continuous visual alert.

Auto Safety Lock

The Auto Safety Lock prevents unintended operation due to the excavator not being controlled solely by the RCV lever.

No additives required

The HX60A can be used without additional additives through fuel line reinforcement.

We make the best performance in rough working conditions without any unsureness with trustworthy HX60A

HX A Series is equipment with eco-friendly, high-performance engines that meet the TIER 4 FINAL emission requirement. Become a true leader on the ground with HX A Series.

* ROPS Cabin and Canopy

The cabin structure of Hyundai HX A Series is using integrally welded low-stress, high strength steel to meet ROPS and OPG certification.

- **ROPS** : Roll-Over Protective Structures ISO12117-2
- **OPG** : Operator Protective Guard, ISO10262 Option

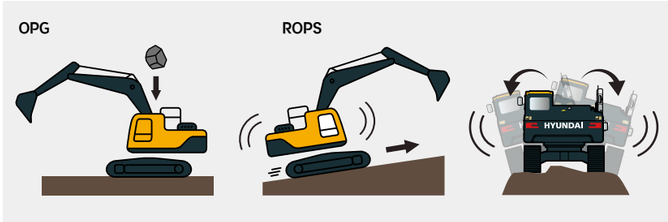

Boom Robust Cylinder Guard NEW

We have added Robust cylinder guards to the boom of our excavator to provide increased protection for the hydraulic cylinders. These guards effectively shield the cylinders from damage caused by debris and other external factors, reducing the risk of downtime and costly repairs.

Built for tough working

The HX60A is designed to with stand harsh treatment, increased thickness lower frame, wet track link, full track guards give maximum protection and durability. Dozer, boom and engine hood guarding give extra protection.

Powerful driving motor

Powerful track motors provide unrivaled performance and traction.

COMFORT & EASE OF USE

In the new HX60A, comfort and efficiency go hand in hand. The standard proportional joysticks improve operating while the new 7- inch cluster makes diagnosing your machine as easy as possible. More space, better visibility and enhanced features make sure the operator enjoys a comfortable working environment.

New 7-inch touchscreen cluster

The new cluster maximises operator productivity by providing integrated, easy access to all necessary information, from the outside temperature to the power modes and hydraulics settings, on a highly readable screen.

Intelligent & wide cluster

The new layout increases the operator's comfort and productivity thanks to an increase in space, better visibility and new tools.

* Photo may include optional equipment.

Ⓐ Comfort in all weathers

The proportional joysticks as standard will greatly improve the operability of your machine and your attachments.

Ⓑ Bluetooth Radio

Audio and hands free functions are conveniently located.

Smooth operation

A proven, high-quality RCV (Remote Control Valve) lever has been added to improve operating and let you personalise settings such as attachment control.

Comfort in all weathers

Standard air conditioning has been improved in the front and rear, while a 3-level, adjustable heated seat ensures maximum comfort.

Push button start

An innovative machine requires convenient modern functions like the button-type ignition key with start & stop function, plus added USB ports.

SERVICEABILITY AND TELEMATICS

IoT / ICT / AI-based digital technology.
Creating a smart construction site. Maximizes connectivity, productivity, and safety for successful businesses.

* Photo may include optional equipment.

Hi MATE

Option

IT'S CONVENIENT, EASY AND VALUABLE

Hi MATE Hyundai's newly developed remote management system, utilizes GPS-satellite technology to provide customers with the highest level of service and product support available. Hi MATE enables users to remotely evaluate machine performance, access diagnostic information, and verify machine locations at the touch of a button.

WHAT IS BENEFITS

Increase Productivity

It helps you operate machines in efficient. You can check the difference between total engine hours and actual working hours. See how productive your machines are and plan any required cost saving solutions. Hi MATE offers working information such as working / idling hours, fuel consumption and rate.

Convenient and Easy Monitoring

There is nothing much to do to monitor your machines. Just log on to the Hi MATE website or mobile application. Hi MATE allows you to watch your machines whenever and wherever you are.

Security

Protect your machines from theft or unauthorized usage with Hi MATE. If the machine moves out of the Geo-fence boundary, you will get alerts.

Fully Accessible MCV & Engine NEW

The cowl, which is a full open type, allows for easy access to both the MCV and engine. In addition, the layout of the MCV and engine has been optimized for better serviceability.

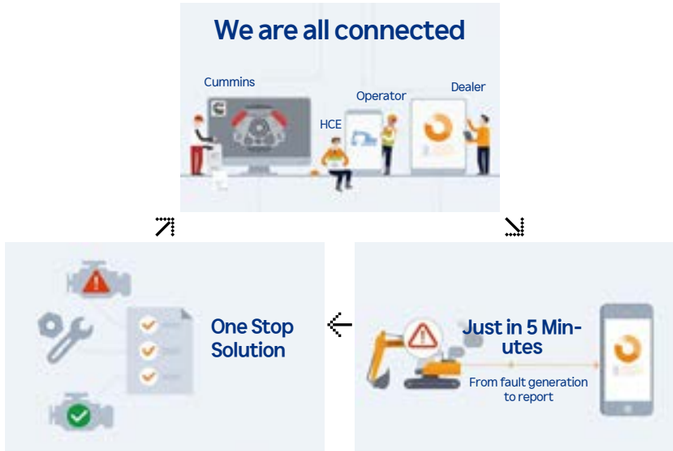

Mobile Fleet App. Option

The new Mobile App is optimized to fleet management. It provides productivity, health insights based on telematics technology and enables fleet owner just focus on most wanted equipment in view of economical usage, utilization, fault codes and maintenance. The new Mobile App sorts equipment in order of eco-index, utilization-index and fault code level automatically so that urgent equipment pops up automatically.

Hi MATE Fleet App

HCE-DT AIR App

2-Piece Dozer Hose NEW

HX60A dozer is designed with a hydraulic hose that is a 2-piece type, providing easy and convenient maintenance. This design allows for easy replacement of individual hoses in case of damage, reducing maintenance time and costs.

Optimal placement of filters

Large engine hood and easy ground level access to daily checks and filters.

SPECIFICATIONS

ENGINE

Maker / Model		HYUNDAI / DM02VB
Type		4-cycle, turbocharged, intercooled, electronic controlled diesel engine
Rated flywheel horse power		
SAE	J1995 (gross)	65.0 hp (48.5 kW) at 2,400 rpm
	J1349 (net)	63.0 hp (47 kW) at 2,400 rpm
Max. torque		248 N·m (183 lb·ft) at 1,600 rpm
Bore x stroke		90 mm x 94 mm (3.5" x 3.7")
Piston displacement		2,392 cc (146 cu in)
Batteries		12 V - 100 Ah
Starting motor		12 V - 2.5 kW
Displacement		13.5 V - 90 Amp

HYDRAULIC SYSTEM

MAIN PUMP	
Type	Variable Alternator tandem axial piston pumps
Max. flow	2x60.5 lpm (16.0 gpm) at 2,200 rpm
Sub-pump for pilot circuit	36.6 lpm (9.7 gpm) + 9.0 lpm (2.4 gpm) 40.3 lpm (10.6 gpm) + 10 lpm (2.6 gpm) at 2,200 rpm
HYDRAULIC MOTORS	
Travel	Two fixed displacement axial piston motors
Swing	Fixed displacement axial piston motor
RELIEF VALVE SETTING	
Implement circuits	220 kgf/cm² (3,130 psi)
Travel circuit	350 kgf/cm² (4,980 psi)
Swing circuit	230 kgf/cm² (3,280 psi)
Pilot circuit	30 kgf/cm² (430 psi)
HYDRAULIC CYLINDERS	
Boom	1-110 x 715 mm (4.3" x 28.1")
Arm	1-90 x 850 mm (3.5" x 33.5")
Bucket	1-80 x 660 mm (3.1" x 26.0")
Boom swing	1-95 x 527 mm (3.7" x 20.7")
Dozer blade (STD)	1-110 x 224 mm (4.3" x 8.8")
Dozer blade (Angle)	1-115 x 212 mm (4.5" x 8.3")
Angle swing	1-95 x 335 mm (3.7" x 13.2")

TRAVEL SYSTEM

Drive method	Fully hydrostatic type
Drive motor	Two fixed displacement axial piston motors
Reduction system	2-stage planetary
Max. drawbar pull	5,221 kgf (11,510 lbf)
Max. travel speed (high / low)	4.2 km/hr (2.6 mph) / 2.2 km/hr (1.4 mph)
Gradeability	35°(70 %)
Parking brake	Automatic, spring applied hydraulic released

CONTROLS

Pilot pressure operated joysticks and pedals with detachable lever provide almost effortless and fatigueless operation.

Pilot control	Two joysticks with one safety lever (LH) : Arm and Swing (RH) : Boom and Bucket (ISO)
Traveling and steering	Two levers with pedals
Engine throttle	Electric, dial type

SWING SYSTEM

Swing motor	Fixed displacement axial piston motor
Swing reduction	2 - stage planetary
Swing bearing lubrication	Grease-bathed
Swing brake	Multi wet disc
Swing speed	9.4 rpm

COOLANT & LUBRICANT CAPACITY

	liter	US gal
Fuel tank	125	33.0
Engine coolant	11	2.9
Engine oil	8.6	2.3
Final drive (each)	1	0.3
Hydraulic tank	70	18.5
Hydraulic system (including tank)	120	31.7

UNDERCARRIAGE

x-leg type center frame is integrally welded with reinforced box-section track frames. the undercarriage includes lubricated rollers, track adjusters with shock absorbing springs and sprockets, and rubber shoes.

Center frame	x-leg type
Track frame	pentagonal box type
No. of upper roller on each side	1
No. of lower roller on each side	5

OPERATING WEIGHT (APPROXIMATE)

Operating weight, including 3,000 mm (9'10") boom, 1,900 mm (6'3") long arm, SAE heaped 0.18 m³ (0.24 yd³) digging bucket, 400 mm (1'4") rubber track, lubricant, coolant, full fuel tank, full hydraulic tank, 435 kg (960 lb) counterweight and all standard equipment.

Operating weight	6,160 kg (13,580 lb)
Ground pressure	0.36 kgf/cm² (5.08 psi)

SOUND LEVEL

Exterior sound level (2000/14/EC – ISO 6395:2008) LWA	99 dB (EU only)
Interior sound level (ISO 6396:2008) LPA	76 dB

AIR CONDITIONING SYSTEM

The air conditioning system contains fluorinated greenhouse gas refrigerant R134a (Global Warming Potential = 1430). The system contains 0.65 kg of refrigerant representing a CO2 equivalent of 0.93 metric tonnes.

DIGGING FORCE

Boom	Length	mm	3,000	
Arm	Length	mm	1,600	1,900
Bucket digging force	SAE	kN	37	37
		kgf	3,763	3,763
		lbf	8,295	8,295
	ISO	kN	42	42
		kgf	4,292	4,292
		lbf	9,461	9,461
Arm crowd force	SAE	kN	27	24
		kgf	2,779	2,476
		lbf	6,126	5,459
	ISO	kN	28	25
		kgf	2,886	2,561
		lbf	6,363	5,646

LIFTING CAPACITY

Rating over-front Rating over-side or 360 degree

LIFTING CAPACITIES HX60A

Boom : 3.0 m (9' 10") / Arm : 1.9 m (6'3") / No Bucket / Counterweight : 435 kg (960 lb) / Rubber track : 400 mm (1' 4") / Dozer down position

Lift-point height (m/ft)		Lift-point radius										At max. reach		
		1.0 m (3.3 ft)		2.0 m (6.6 ft)		3.0 m (9.8 ft)		4.0 m (13.1 ft)		5.0 m (16.4 ft)		Capacity		Reach
														m (ft)
5.0m	kg											*1,200	*1,200	3.64
16.4 ft	lb											*2,650	*2,650	(11.9)
4.0m	kg							*1,060	*1,060			*1,080	1,070	4.63
13 ft	lb							*2,340	*2,340			*2,380	2,360	(15.2)
3.0m	kg							*1,140	*1,140	*1,160	950	*1,020	890	5.19
10 ft	lb							*2,510	*2,510	*2,560	2,090	*2,250	1,960	(17.0)
2.0m	kg					*1,730	*1,730	*1,380	1,300	*1,240	930	*1,020	810	5.47
7 ft	lb					*3,810	*3,810	*3,040	2,870	*2,730	2,050	*2,250	1,790	(18.0)
1.0m	kg					*2,430	1,870	*1,680	1250	*1,360	910	*1,080	780	5.54
3 ft	lb					*5,360	4,120	*3,700	2,760	*3,000	2,010	*2,380	1,720	(18.2)
0.0m	kg			*1,480	*1,480	*2,810	1,800	*1,880	1,200	*1,440	880	*1,210	800	5.39
0.0ft	lb			3,460	*3,260	*6,190	3,970	*4,140	2,650	*3,170	1,940	*2,670	1,760	(17.7)
-1.0m	kg	*1,920	*1,920	*2,710	*2,710	*2,820	1,770	*1,920	1,180	*1,380	880	*1,380	880	5.01
-3 ft	lb	*4,230	*4,230	*5,970	*5,970	*6,220	3,900	*4,230	2,600	*3,040	1,940	*3,040	1,940	(16.4)
-2.0m	kg	*3,140	*3,140	*4,070	3,440	*2,480	1,790	*1,670	1,190			*1,440	1,080	4.31
-7 ft	lb	*6,920	*6,920	*8,970	7,580	*5,470	3,950	*3,680	2,620			*3,170	2,380	(14.1)
-3.0m	kg			*2,450	*2,450	*1,430	*1,430					*1400	*1,400	3.02
-9.8 ft	lb			*5,400	*5,400	*3,150	*3,150					*3,090	*3,090	(9.9)

Boom : 3.0 m (9' 10") / Arm : 1.9 m (6'3") / No Bucket / Counterweight : 435 kg (960 lb) / Rubber track : 400 mm (1' 4") / Angle dozer down position

Lift-point height (m/ft)		Lift-point radius										At max. reach		
		1.0 m (3.3 ft)		2.0 m (6.6 ft)		3.0 m (9.8 ft)		4.0 m (13.1 ft)		5.0 m (16.4 ft)		Capacity		Reach
														m (ft)
5.0m	kg											*1,200	*1,200	3.64
16.4 ft	lb											*2,650	*2,650	(11.9)
4.0m	kg							*1,060	*1,060			*1,080	*1,080	4.63
13 ft	lb							*2,340	*2,340			*2,380	*2,380	(15.2)
3.0m	kg							*1,140	*1,140	*1,160	970	*1,020	910	5.19
10 ft	lb							*2,510	*2,510	*2,560	2,140	*2,250	2,010	(17.0)
2.0m	kg					*1,730	*1,730	*1,380	1,340	*1,240	960	*1,020	830	5.47
7 ft	lb					*3,810	*3810	*3,040	2,950	*2,730	2,120	*2,250	1,830	(18.0)
1.0m	kg					*2,430	1,920	*1,680	1,280	*1,360	930	*1,080	800	5.54
3 ft	lb					*5,360	4,230	*3,700	2,820	*3,000	2,050	*2,380	1,760	(18.2)
0.0m	kg			*1,480	*1,480	*2,810	1,850	*1,880	1,240	*1,440	910	*1,210	820	5.39
0.0ft	lb			3,460	*3,260	*6,190	4,080	*4,140	2,730	*3,170	2,010	*2,670	1,810	(17.7)
-1.0m	kg	*1,920	*1,920	*2,710	*2,710	*2,820	1820	*1,920	1,220	*1,380	900	*1,380	900	5.01
-3 ft	lb	*4,230	*4,230	*5,970	*5,970	*6,220	4,010	*4,230	2,690	*3,040	1,980	*3,040	1,980	(16.4)
-2.0m	kg	*3,140	*3,140	*4,070	3,540	*2,480	1,840	*1,670	1,230			*1,440	1,120	4.31
-7 ft	lb	*6,920	*6,920	*8,970	7,800	*5,470	4,060	*3,680	2,710			*3,170	2,470	(14.1)
-3.0m	kg			*2,450	*2,450	*1,430	*1,430					*1,400	*1,400	3.02
-9.8 ft	lb			*5,400	*5,400	*3,150	*3,150					*3,090	*3,090	(9.9)

| 1 | Lifting capacity are based on ISO 10567.
| 2 | Lifting capacity of HX Series does not exceed 75% of tipping load with the machine on firm, level ground or 87% of full hydraulic capacity.
| 3 | The Lift-point is bucket pivot mounting pin on the arm(without bucket mass).
| 4 | (*) indicates load limited by hydraulic capacity.

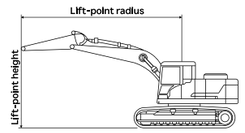

BUCKETS

All buckets are welded with high-strength steel.

Capacity m³ (yd³)		Width mm (in)		Weight kg (lb)	Tooth EA	Recommendation mm (ft.in)					
						3,000 (9' 10") Boom					
SAE heaped	CECE heaped	Without Side cutters	With Side cutters			1,600 (5' 3") Arm	1,600 (5' 3") Arm	1,600 (5' 3") Arm	1,900 (6' 3") Arm	1,900 (6' 3") Arm	1,900 (6' 3") Arm
◈ 0.18 (0.24)	0.15 (0.20)	670 (26.4")	730 (28.7")	163	5	●	●	●	●	●	●

◈ General Purpose
◆ Rock-Heavy duty bucket
★ Heavy duty bucket

■ : Applicable for materials with density of 2,100 kgf/m³ (3,500 lbf/yd³) or less
● : Applicable for materials with density of 1,800 kgf/m³ (3,000 lbf/yd³) or less
◐ : Applicable for materials with density of 1,500 kgf/m³ (2,500 lbf/yd³) or less
▲ : Applicable for materials with density of 1,200 kgf/m³ (2,000 lbf/yd³) or less
× : Applicable for materials with density of 1,200 kgf/m³ (2,000 lbf/yd³) or less

DIMENSIONS & WORKING RANGE

HX60A DIMENSIONS & WORKING RANGE

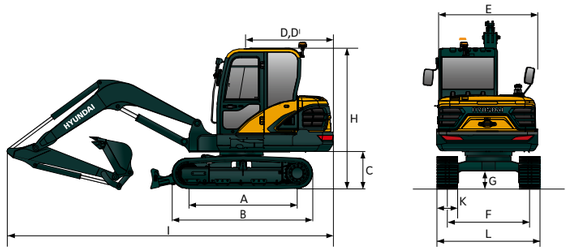

Unit : mm (ft in)

A	Tumbler distance	2,010 (6' 7")	
B	Overall length of crawler	2,544 (8' 4")	
C	Ground clearance of counterweight	687 (2' 3")	
D	Tail swing radius	1,680 (5' 6")	
D'	Rear-end length	1,675 (5' 6")	
E	Overall width of upper structure	1,850 (6' 1")	
F	Track gauge	1,500 (4' 11")	
G	Min. ground clearance	271 (11")	
H	Overall height of cab	2,595 (8' 6")	
	Boom length	3,000 (9' 10")	
	Arm length	1,600 (5' 3")	1,900 (6' 3")
I	Overall length	5,970 (19' 7")	5,995 (19' 8")
K	Track shoe width	Steel track	Rubber track
		380 (1' 3")	400 (1' 4")
L	Overall Width	1,880 (6' 2")	1,900 (6' 3")

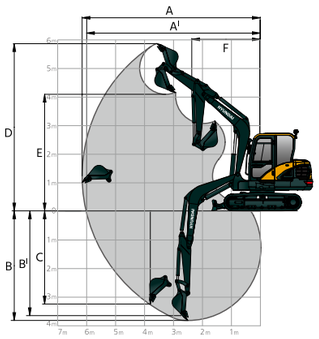

Unit : mm (ft in)

	Boom Length	3,000 (9' 10")	
	Arm Length	1,600 (5' 3")	1,900 (6' 3")
A	Max. Digging Reach	6,150 (20' 2")	6,450 (21' 2")
A'	Max. digging reach at ground	6,020 (19' 9")	6,320 (20' 9")
B'	Max. digging depth	3,770 (12' 4")	4,070 (13' 4")
B	B' Max. digging depth (8' level)	3,380 (11' 1")	3,720 (12' 2")
C	Max. vertical wall digging depth	3,230 (10' 7")	3,600 (11' 10")
D	Max. digging height	5,760 (18' 11")	5,980 (19' 7")
E	Max. dumping height	4,000 (13' 1")	4,210 (13' 10")
F	Min. swing radius	2,375 (7' 10")	2,410 (7' 11")

* Standard and optional equipment may vary. Contact your Hyundai dealer for more information.
  The machine may vary according to International standards.
* The photos may include attachments and optional equipment that are not available in your area.
* Materials and specifications are subject to change without advance notice.
* All imperial measurements rounded off to the nearest pound or inch.

STANDARD/OPTIONAL EQUIPMENT

ENGINE	STD	OPT
Hyundai DM02V	●	
HYDRAULIC SYSTEM		
2 Power mode	●	
Engine auto idle	●	
CABIN & INTERIOR		
Radio & USB	●	
Standard key	●	
Smart key + Start button		●
Proportional joysticks	●	
Adjustable heatable seat (fabric)	●	
Adjustable heatable seat (pvc)		●
CABIN FOG		
FOG protection (top)		●
FOG protection (front+top)		●
SAFETY		
Boom LED light		●
Cabin LED lamp		●
Beacon LED lamp		●
Boom safety valve		●
Arm safety valve		●
Rear view camera		●
Travel alarm	●	
ATTACHMENT		
BOOMS		
3.00m, 9'10" Mono	●	
ARM		
1.60m, 5'3"	●	
1.90m, 6'3"		●
QUICK COUPLER		
Quick coupler (Push+Hook)		●
Quick coupler (Slide+Hook)		●

OTHERS	STD	OPT
Rotating piping		●
Quick coulper piping		●
Fuel filler pump		●
Hi Mate		●
Pattern change valve		●
COUNTERWEIGHT		
435kg CWT	●	
UNDERCARRIAGE		
Rubber track 400mm	●	
Track 380mm (Steel)		●
Track 450mm (Steel)		●
Track 400mm + Rubber pads		●

* Standard and optional equipment may vary.
  Contact your HD Hyundai dealer for more information.
  The machine may vary according to International standards.
* The photos may include attachments and optional equipment that are not available in your area.
* Materials and specifications are subject to change without advance notice.