WAVE

Aluminum Profile - Raceway Suspended

High-quality 6063 thin-wall aluminum, light-weight design featuring hidden cables and suspended by cables from the ceiling. The raceway space is enough to conceal seamless connectors with bottom feed and the general male/female connectors. It is superb for the facade where tidiness is required and the scenarios that lack of space for wiring. Please refer to install manual for proper installation practices.

ORDER CODE

A9		F	1	4
MOUNTING PROFILE TYPE	**STANDARD LENGTH**	**PROFILE**	**COLOR**	**BENDING**
A9 = Aluminum Raceway Suspended	3 = 19.68in (500mm) 5 = 39.37in (1000mm) 6 = 78.74in (2000mm)	F = Wave	1 = Standard	4 = N/A

DIMENSIONS

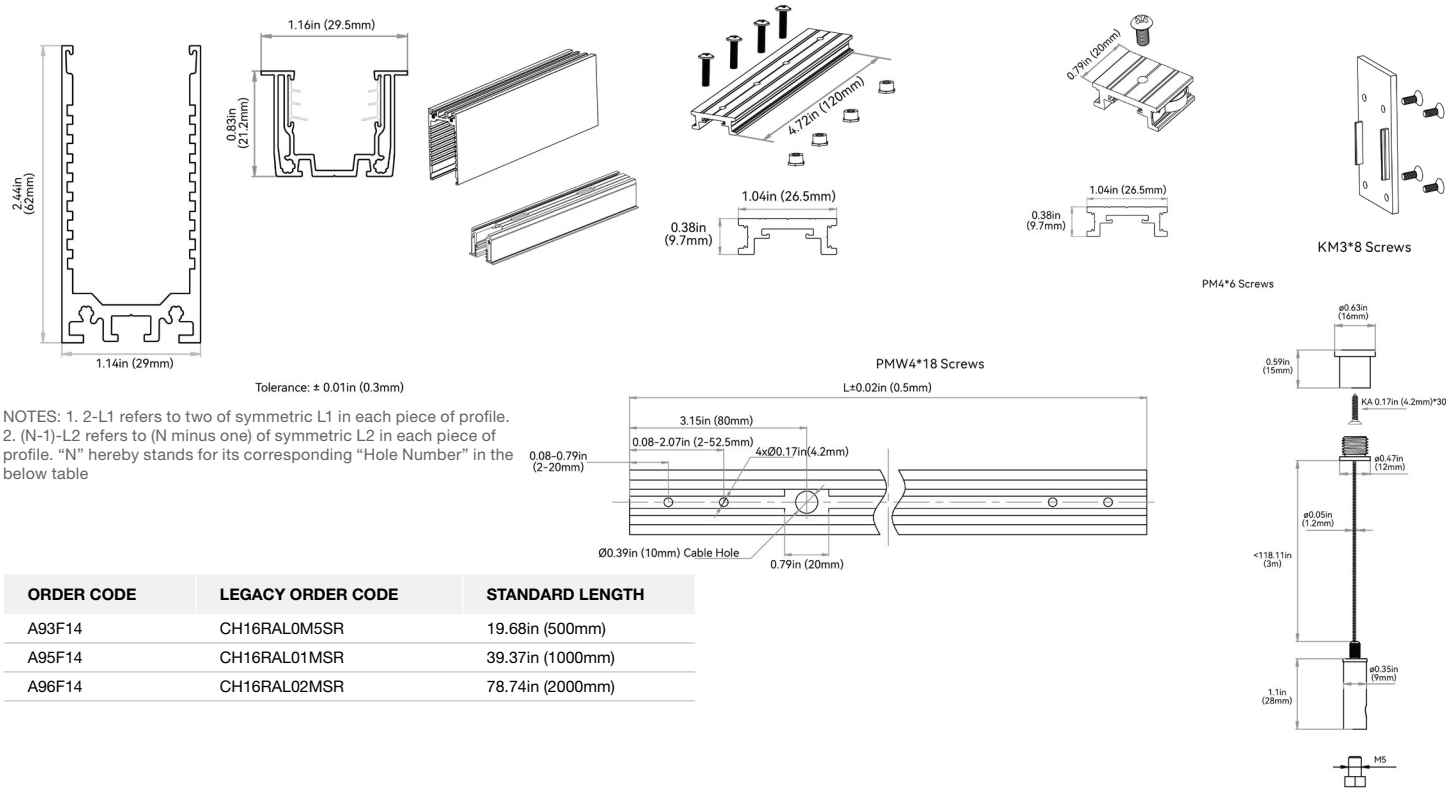

NOTES: 1. 2-L1 refers to two of symmetric L1 in each piece of profile.
2. (N-1)-L2 refers to (N minus one) of symmetric L2 in each piece of profile. "N" hereby stands for its corresponding "Hole Number" in the below table

ORDER CODE	LEGACY ORDER CODE	STANDARD LENGTH
A93F14	CH16RAL0M5SR	19.68in (500mm)
A95F14	CH16RAL01MSR	39.37in (1000mm)
A96F14	CH16RAL02MSR	78.74in (2000mm)