REQUEST QUOTE NOW

Customer: Date:

Project:



AQUA NEON WAVE: PVC - 24V

Submersible Pool Rated Linear Flex Profile - Tunable White

RoHS COMPLIANT | Class 2 | UL | CE

PROFILE CAPABILITIES

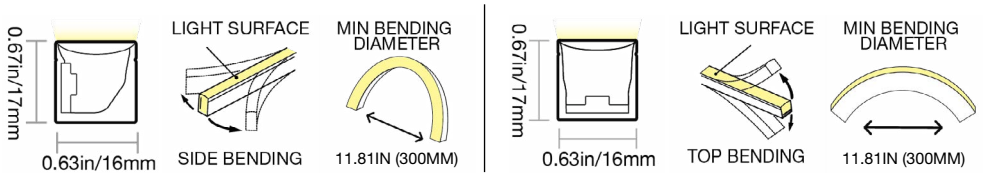

CERTIFICATIONS & FEATURES*

IP68 | IK10 | DMX | DALI | 24 DC

5 YEAR WARRANTY | 3G VIBRATION | 16.4FT (5M) SUBMERSIBLE DEPTH | RESISTANT: FLAME, UV, SOLVENT, SALT WATER

TEMPERATURES

AMBIENT OPERATING TEMPERATURE:
Above Water: -4°F to 113°F (-20°C to 45°C)
Underwater: -4°F to 95°F (-20°C to 35°C)

AMBIENT INSTALLATION TEMPERATURE:
≥-32°F (0°C)

FIXTURE STORAGE TEMPERATURE:
-4°F to 140°F (-20°C to 60°C)

MAX MOUNTING SURFACE TEMPERATURE:
140°F (60°C)

HUMIDITY (NON-CONDENSING):
0–95%

THERMAL MANAGEMENT:
Free Air Convection

FIXTURE ORDER CODE

E	A					B		
F	A	2	F		W	2		
INPUT CONNECTORS	SERIES	MATERIAL	PROFILE	BENDING	JACKET/BASE + LENS COLOR	LED FUNCTION	LED COLOR	CHIP + CRI
See Page 5 to select input connector	A = Aqua Neon	2 = PVC	F = Wave	1 = Side 2 = Top	W = White + Diffused	2 = Tunable White	U = 2200K -5700K W = 2500K -5000K	2 = Epistar SMD LED Chip + CRI80 2200K~5700K 6 = Nichia SMD LED Chip + CRI80 2500K~5000K

C		D	E		F		
G		F	F		F	4	
POWER	VOLTAGE + CIRCUIT TYPE	ORDER UNIT LENGTH	OUTPUT CONNECTOR		MOUNTING PROFILE		POWER SUPPLIES & CONTROLS:
G = 3.66W/ft (12W/m)	3V = 24V DC CV	F = 3.28in (83.3mm)	See Page 5 to select output connector		See Page 8 to select mounting profile		By Others By GLLS

* Maximum IP and IK ratings achievable with appropriate accessories, and cable diameter: PVC tunable white = 0.24in (6mm).

AQUA NEON WAVE: PVC - 24V

Submersible Pool Rated Linear Flex Profile - Tunable White

COMPLEXITY, SIMPLIFIED.

A

MECHANICAL

ASSEMBLY

Fixtures are carefully assembled using high-quality components to ensure durability and performance. Each unit is built to meet strict specifications, with attention to electrical safety, thermal management, and optical alignment.

OVERALL & CUTTING LENGTHS

Fixtures feature defined overall lengths and specific cutting increments for easy customization. Cutting must be done at marked points to maintain proper function and consistent light output.

JACKET COLOR

The white jacket with diffused white lens covers provide a clean, uniform appearance while softening light output for reduced glare. It enhances visual comfort and delivers smooth, even illumination ideal for architectural and display applications.

BENDING RADIUS

Do not bend smaller than allowed minimum bend diameter, or may cause damage to the light & void warranty.

OPERATION

LIGHT ENGINE

Tunable White Pulse Width Modulation (PWM) light engines deliver stable, flicker-free light at a fixed brightness. They offer consistent color and reliable performance for long-term applications.

ELECTRICAL

Designed to meet UL, CE, and RoHS standards, they feature overload, overvoltage, and short-circuit protection, along with low EMI and efficient thermal management for safe, reliable operation.

DIMMING

Dimming of 24V PWM fixtures is achieved via the driver or decoder used in the system. Depending on the selected driver/decoder, control options can include 0–10V, DMX, or DALI, enabling smooth, flicker-free dimming while maintaining consistent color and performance. Note: DMX and DALI are supported at the system level, not natively by the fixture.

GENERAL

WARRANTY

Limited 5-Year Warranty against defects in materials and manufacturing. Coverage applies to properly installed and maintained products. Damage from misuse or improper installation is not covered. GLLS may repair, replace, or issue credit for eligible claims.

LUMEN MAINTENANCE

GLLS static lighting fixtures are tested to IES LM-84 and projected with IES TM-28 to ensure consistent lumen maintenance. Fixtures are designed to retain at least 70% of their initial brightness (L70) over a 10-year lifespan when properly installed and operated.

CERTIFICATION

Tested to UL676 by Underwriters Laboratory for use in the USA and Canada. Exceeds CSA C22.2, CE, and RoHS standards. Must be used under Class 2 ratings to maintain certification.

UL Certificate #: E509134

Report Referance #: E509134-20190918

TESTING

OPTICAL TESTING

TEST	RESULTS
Spectrum Analysis	IES LM 79 (Lumen, CCT, CRI, XY, SDCM, Wavelength)
Photometric Distribution	IES LM 79
Lumen Maintenance & Lifetime	IES LM 84 & IES TM28

TEMPERATURE TESTING

TEST	RESULTS
Normal Temperature Test	UL1598 & UL2388 & IEC60598-1 & IEC60598-2-21
Abnormal Operation Test	UL1598 & UL2388 & IEC60598-1 & IEC60598-2-21

ENVIRONMENTAL TESTING

TEST	RESULTS
Salt Water Immersion	IEC60598-1, Sailinity 4%
Salt Spray Test	IEC60068-2-11
Outdoor Exposure	Manufacturer-defined
Flame Resistance	UL94
UV Exposure	ASTMG 154, ISO 4892-3, UVA @ 340nm & 55
IPX8	EN 60598-1: 2015+A1:2018 Clause 9.2.2 & 9.2.8
Temperature Shock(Silicone)	Manufacturer-defined, -40°C - 60°C (typical temperature range)
Constant Temperature	Manufacturer-defined
12mm Needle Flame Test (Silicone)	IEC60695-11-5
650 Glow-wire Test (Silicone)	IEC60695-2-10

DURABILITY TESTING

TEST	RESULTS
Bending Test	Manufacturer-defined, 500 cycles
Tensile Test	Manufacturer-defined, > The weight of light in max.
Twist Test	Manufacturer-defined, >200 cycles
Ball Impact	UL1598 & UL2388 & IEC60598-1 & IEC60598-2-21
IK	IEC62262

AQUA NEON WAVE: PVC - 24V

Submersible Pool Rated Linear Flex Profile - Tunable White

COMPLEXITY, SIMPLIFIED.

B

LED COLORS



2200K-5700K



2500K-5000K

FIXTURE SPECIFICATIONS & OPTICAL PARAMETERS - WHITE JACKET + DIFFUSED LENS - SIDE BEND

COLOR	LED COUNT	1 CONNECTOR FULL/DYNAMIC*	2 CONNECTORS FULL/DYNAMIC**	UL CLASS 2 MAX RUN***	FIXTURE COLOR TOLERANCE****	WAVELENGTH/ CCT	LED CRI	LED COLOR TOLERANCE	LUMEN COUNT	LEGACY ORDER CODE
2200K; 5700K; 2200-5700K	43 LEDs/ft (144 LEDs/m)	21.0ft (6.4m) / N/A	N/A / N/A	26ft (8m)	3 SDCM	2238 ± 102K; 5669 ± 355K	82-87; 82-87	2.3SDCM; 2.3SDCM	54.86lm/ft (180lm/m); 54.86lm/ft (180lm/m)	NF16E1013WEDWH24DVPO
2500K; 5000K; 2500-5000K	43 LEDs/ft (144 LEDs/m)	21.0ft (6.4m) / N/A	N/A / N/A	26ft (8m)	3 SDCM	2460 ± 120K; 5029 ± 283K	81-88; 81-88	3.8SDCM; 3.8SDCM	54.86lm/ft (180lm/m); 54.86lm/ft (180lm/m)	NF16E1013WNDWH24DVPO

FIXTURE SPECIFICATIONS & OPTICAL PARAMETERS - WHITE JACKET + DIFFUSED LENS - TOP BEND

COLOR	LED COUNT	1 CONNECTOR FULL/DYNAMIC*	2 CONNECTORS FULL/DYNAMIC**	UL CLASS 2 MAX RUN***	FIXTURE COLOR TOLERANCE****	WAVELENGTH/ CCT	LED CRI	LED COLOR TOLERANCE	LUMEN COUNT	LEGACY ORDER CODE
2200K; 5700K; 2200-5700K	43 LEDs/ft (144 LEDs/m)	21.0ft (6.4m) / N/A	N/A / N/A	26ft (8m)	3 SDCM	2238 ± 102K; 5669 ± 355K	82-87; 82-87	2.3SDCM; 2.3SDCM	54.86lm/ft (180lm/m); 54.86lm/ft (180lm/m)	NF16E0013WEDWH24DVPO
2500K; 5000K; 2500-5000K	43 LEDs/ft (144 LEDs/m)	21.0ft (6.4m) / N/A	N/A / N/A	26ft (8m)	3 SDCM	2460 ± 120K; 5029 ± 283K	81-88; 81-88	3.8SDCM; 3.8SDCM	54.86lm/ft (180lm/m); 54.86lm/ft (180lm/m)	NF16E0013WNDWH24DVPO

* Max Run: Dynamic = white channels <100%; Full Load = white channels at 100%. **As per CLASS 2 power supply standards, the maximum allowable fixture power is limited to a single 100W supply. Double Feeding is Prohibited. ***For UL Class 2 calculations, GLLS uses a maximum output of 96 W / 96 VA for 24 V circuits, unless otherwise confirmed by the listed driver. All runs are assumed to be single-feed from one Class 2 output. Dual-feeding from separate drivers does not qualify as Class 2 unless the run is electrically split into isolated sections. ****PVC products maintain ≤3 SDCM within a production run and <6 SDCM between production runs.

AQUA NEON WAVE: PVC - 24V

Submersible Pool Rated Linear Flex Profile - Tunable White

COMPLEXITY, SIMPLIFIED.

C

POWER & VOLTAGE

COLOR	VOLTAGE + CIRCUIT TYPE	POWER CONSUMPTION
2200-5700K	24V DC CV	3.66W/ft (12W/m)
2500-5000K		

D

CUTTING INSTRUCTIONS

COLOR	ORDER UNIT (CUTTING UNIT)
2200-5700K	3.28in (83.3mm) (12 LEDs)
2500-5000K	

AQUA NEON WAVE: PVC - 24V

Submersible Pool Rated Linear Flex Profile - Tunable White

COMPLEXITY, SIMPLIFIED.

E

COMPATIBLE CONNECTORS

INPUT - 01

F					
PROFILE	BEND	WIRING	INPUT CONNECTOR TYPE	INPUT ORIENTATION + TYPE	INPUT CABLE LENGTH (LEAD WIRE)

OUTPUT - 02

F					
PROFILE	BEND	WIRING	OUTPUT CONNECTOR TYPE	OUTPUT ORIENTATION + TYPE	OUTPUT CABLE LENGTH (LEAD WIRE)
F = Wave	1 = Side 2 = Top 4 = N/A (End Cap)	2 = 3 Wire (Tunable White/SPI-Pixel) 0 = N/A (End Cap)	3 = PVC Submersible	A = End Exit B = Bottom Exit C = Side Left Exit D = Side Right Exit I = End Cap	4 = 16ft (5m) 5 = 32.81ft (10m) 8 = N/A
			0 = PVC Compact Submersible	A = End Exit B = Bottom Exit C = Side Left Exit D = Side Right Exit I = End Cap	3 = 9.84ft (3m) 8 = N/A

LEGACY CONNECTOR ORDER CODE

XX	16E	X	00	XX	XX	X	XX	XXX	X
PRODUCT TYPE	PROFILE	BENDING	LIGHT EMITTING	FUNCTIONALITY	CONNECTOR TYPE	FIXTURE END	EXIT TYPE	LENGTH	
FA = Factory Accessories	16E = Wave	1 = Side 2 = Top	00 = 16E	3W = Tunable White/SPI-Pixel 0W = For End Cap	PO = Submersible	1 = Input Side 2 = Output Side 0 = Jumpers/T-feeds/ Seamless Bottom/ Seamless End 3 = Input/Output	EN = End BO = Bottom SL = Side Left SR = Side Right EC = End Cap	05M = 16ft (5m) 10M = 32.81ft (10m) 000 = For End Cap	P = Power or For End Cap S = Signal & Power

AQUA NEON WAVE: PVC - 24V

Submersible Pool Rated Linear Flex Profile - Tunable White

COMPLEXITY, SIMPLIFIED.

E

PVC SUBMERSIBLE CONNECTOR

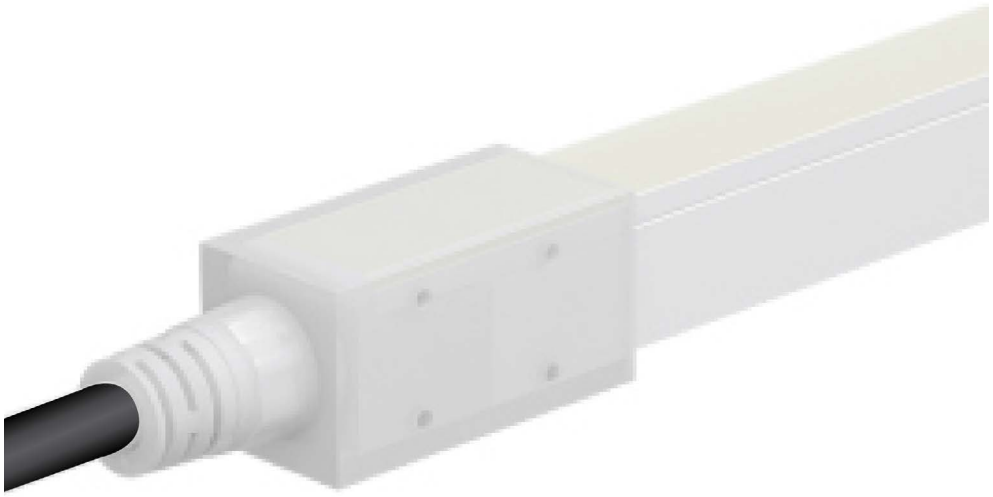



NOTES:
1. Connector Tolerance ±0.02in (0.5mm)
2. Cable diameter: Static, Tunable & SPI PVC = 0.24in (6mm)
3. Do not apply force to the feed cable
4. Ensure Max. Cable Lengths are followed according to wire gage to avoid voltage drop

IP68; extremely durable, underwater, UL676 rated. Recommended for; long-term submersed in wet environments up to the depth of 16.40ft (5m) (water is skin safe for extended periods); high temperature and humidity environments (mounting surface temperature <140°F(60°C); custom predetermined lengths and larger connector; harsh working conditions & increased handling forces during installation. Custom factory assembly.

END EXIT: F#23A#



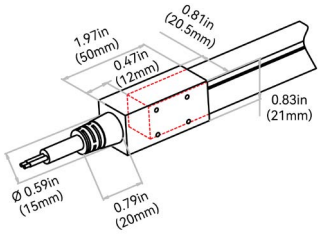

END CAP: F403I8



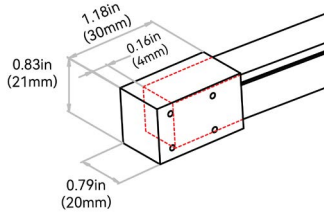

SCREW LOCK CONNECTOR ACCESSORY - IP67



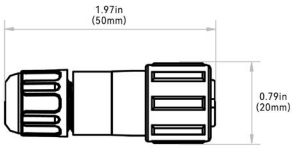

NOTE: The tolerance is ±0.08in (2mm).

BOTTOM EXIT: F#23B#



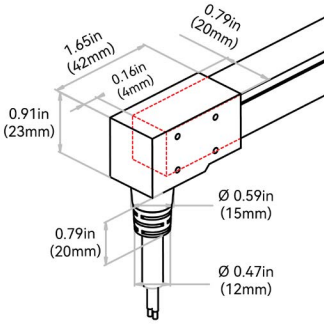

AQUA NEON WAVE: PVC - 24V

Submersible Pool Rated Linear Flex Profile - Tunable White

COMPLEXITY, SIMPLIFIED.

E

SIDE LEFT EXIT: F#23C#



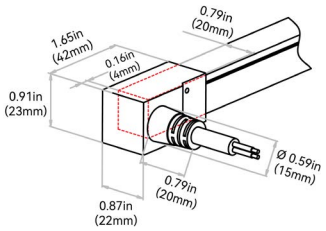

SIDE RIGHT EXIT: F#23D#



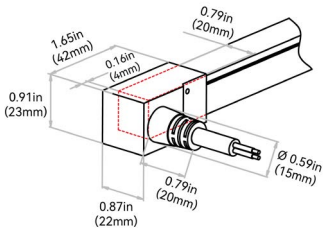

AQUA NEON WAVE: PVC - 24V

Submersible Pool Rated Linear Flex Profile - Tunable White

COMPLEXITY, SIMPLIFIED.

E

PVC COMPACT SUBMERSIBLE CONNECTOR

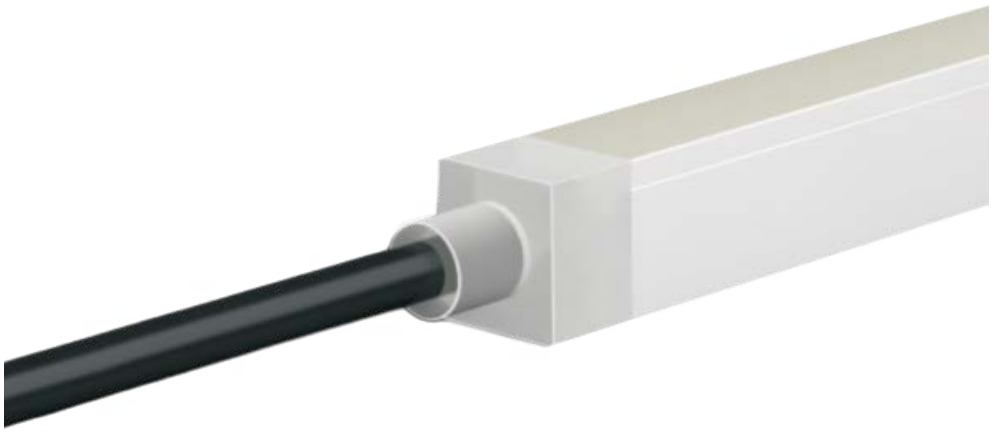



NOTES:
1. Connector Tolerance ±0.02in (0.5mm)
2. Cable diameter: Static, Tunable & SPI PVC = 0.24in (6mm)
3. Do not apply force to the feed cable
4. Ensure Max. Cable Lengths are followed according to wire gage to avoid voltage drop

IP68; extremely durable, underwater, UL676 rated. Recommended for; long-term submersed in wet environments up to the depth of 16.40ft (5m) (water is skin safe for extended periods); high temperature and humidity environments (mounting surface temperature <140°F(60°C); custom predetermined lengths and larger connector; harsh working conditions & increased handling forces during installation. Custom factory assembly.

END EXIT: F#20A3

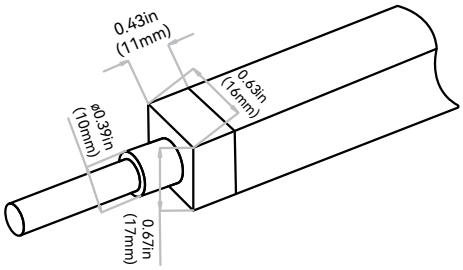

END CAP: F400I8

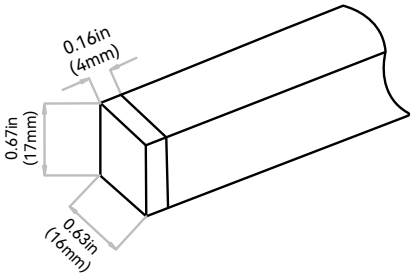

BOTTOM EXIT: F#20B3

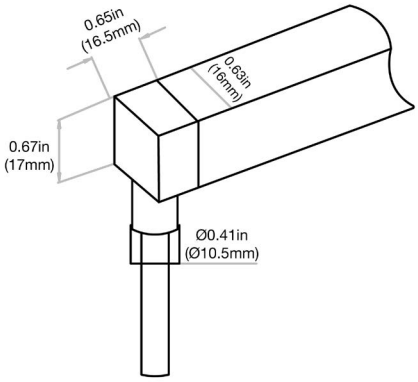

SIDE LEFT EXIT: F#20C3

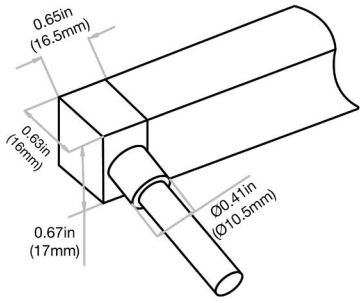

AQUA NEON WAVE: PVC - 24V

Submersible Pool Rated Linear Flex Profile - Tunable White

COMPLEXITY, SIMPLIFIED.

E

SIDE RIGHT EXIT: F#20D3

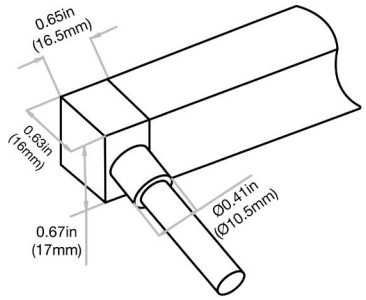

AQUA NEON WAVE: PVC - 24V

Submersible Pool Rated Linear Flex Profile - Tunable White

COMPLEXITY, SIMPLIFIED.

F

MOUNTING PROFILES

		F		4
MOUNTING PROFILE TYPE	**STANDARD LENGTH**	**PROFILE**	**COLOR**	**BEND**
P1 = Plastic Reinforced	2 = 1.38in (35mm) 3 = 19.68in (500mm) 5 = 39.37in (1000mm) 6 = 78.74in (2000mm)	F = Wave	1 = Standard	4 = N/A
C1 = Silicone Flexible	F = 2.16in (55mm) B = 4.33in (110mm) C = 7.87in (200mm) 3 = 19.68in (500mm) 5 = 39.37in (1000mm)		2 = Black 3 = White 0 = Custom	

AQUA NEON WAVE: PVC - 24V

Submersible Pool Rated Linear Flex Profile - Tunable White

COMPLEXITY, SIMPLIFIED.

F

SILICONE PROFILE - FLEXIBLE

An all-in-one mounting profile designed to unleash your creativity. This profile not only provides flexibility in installation methods, but also overcomes bending limitations by offering both top and side bending in a single profile. Fully encapsulated in UL-certified silicone, it excels in UV, weather, and corrosion resistance, making it suitable for underwater, high and low temperature enviroments. Elegant and square in appearance, it is available in black or white standard colors, or bespoke colors to blend in with the background. Supported by innovative serrated silicone fins, its clamping strength is strong enough to secure any installation method. Please refer to install manual for proper installation practices. Side and top bending. Please refer to install manual for proper installation practices.



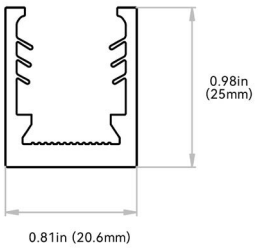

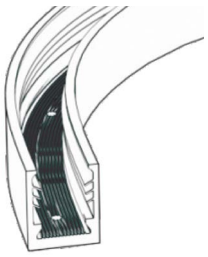

APPLICABLE AUXILIARY MATERIALS



Rubber Expansion Anchor



M3 Stainless Steel
Self-tapping Screw



Anti-chlorine Waterproof Adhesive
(*Not provided*)



Tolerance: ± 0.01in (0.3mm)

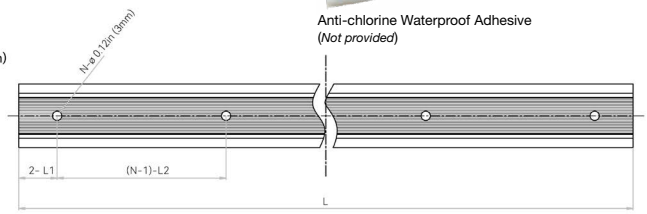

NOTES: 1. 2-L1 refers to two of symmetric L1 in each piece of profile.
2. (N-1)-L2 refers to (N minus one) of symmetric L2 in each piece of profile.
"N" hereby stands for its corresponding "Hole Number" in the below table

ORDER CODE	LEGACY ORDER CODE: WHITE	LEGACY ORDER CODE: BLACK	STANDARD LENGTH	L1	L2	SLOTTED HOLE	HOLE #
C1FF#4	CH16FAN5C5SEW	CH16FAN5C5SEB	2.16in (55mm)	0.49in (12.5mm)	1.18in (30mm)	Ø 0.12in (3mm)	2
C1BF#4	CH16FAN1C1SEW	CH16FAN1C1SEB	4.33in (110mm)	0.46in (11.6mm)	3.48in (88.4mm)	Ø 0.12in (3mm)	2
C1CF#4	CH16FAN0M2SEW	CH16FAN0M2SEB	7.87in (200mm)	0.46in (11.6mm)	3.48in (88.4mm)	Ø 0.12in (3mm)	3
C13F#4	CH16FAN0M5SEW	CH16FAN0M5SEB	19.68in (500mm)	1.14in (29mm)	3.48in (88.4mm)	Ø 0.12in (3mm)	6
C15F#4	CH16FAN01MSEW	CH16FAN01MSEB	39.37in (1000mm)	0.54in (13.8mm)	3.48in (88.4mm)	Ø 0.12in (3mm)	12

PLASTIC PROFILE - REINFORCED

High Quality rigid plastic designed to securely hold fixtures. Recommended for use in extreme environments susceptible to increased water/humidity (SPA's and pools). Please refer to install manual for proper installation practices.



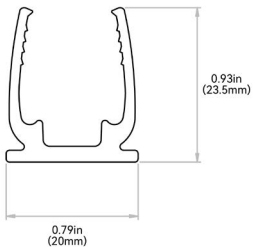

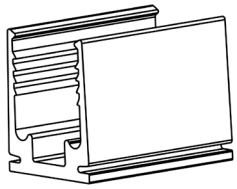

APPLICABLE AUXILIARY MATERIALS



Rubber Expansion Anchor



M3 Stainless Steel
Self-tapping Screw



Anti-chlorine Waterproof Adhesive
(*Not provided*)



Tolerance: ± 0.02in (0.5mm)

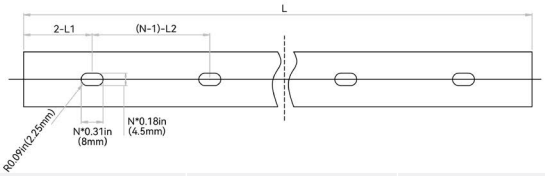

NOTES: 1. 2-L1 refers to two of symmetric L1 in each piece of profile.
2. (N-1)-L2 refers to (N minus one) of symmetric L2 in each piece of profile.
"N" hereby stands for its corresponding "Hole Number" in the below table

ORDER CODE	LEGACY ORDER CODE	STANDARD LENGTH	L1	L2	SLOTTED HOLE	HOLE #
P12F14	CL16RTP3C5SD	1.38in (35mm)	0.69in (17.5mm)	N/A	0.18*0.31in (4.5*8mm)	1
P13F14	CH16RTP0M5SD	19.68in (500mm)	1.97in (50mm)	7.87in (200mm)	0.18*0.31in (4.5*8mm)	3
P15F14	CH16RTP01MSD	39.37in (1000mm)	3.93in (100mm)	7.87in (200mm)	0.18*0.31in (4.5*8mm)	5
P16F14	CH16RTP02MSD	78.74in (2000mm)	3.93in (100mm)	7.87in (200mm)	0.18*0.31in (4.5*8mm)	10