REQUEST QUOTE NOW

Customer: Date:

Project:



HIGH OUTPUT WAVE: SILICONE - 24V

Indoor & Outdoor Rated Linear Flex Profile - Static Whites

RoHS COMPLIANT | Class 2 | UL | CE

PROFILE CAPABILITIES

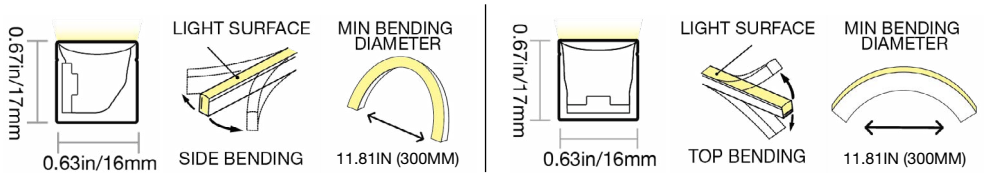

CERTIFICATIONS & FEATURES*

IP68 | IK10 | DMX | DALI | 24 DC | 10 YEAR WARRANTY | 3G VIBRATION | RESISTANT

FLAME
UV
SOLVENT
SALT WATER

TEMPERATURES

AMBIENT OPERATING TEMPERATURE:
12W/m: -40°F to 131°F (-40°C to 55°C)
15W/m: -40°F to 113°F (-40°C to 45°C)

AMBIENT INSTALLATION TEMPERATURE:
-40°F to 140°F (-40°C to 60°C)

FIXTURE STORAGE TEMPERATURE:
-40°F to 140°F (-40°C to 60°C)

MAX MOUNTING SURFACE TEMPERATURE:
185°F (85°C)

HUMIDITY (NON-CONDENSING):
0–95%

THERMAL MANAGEMENT:
Free Air Convection

FIXTURE ORDER CODE

E	A					B		
F	H	1	F		W	1		
INPUT CONNECTORS	SERIES	MATERIAL	PROFILE	BENDING	JACKET/BASE + LENS COLOR	LED FUNCTION	LED COLOR	CHIP + CRI
See Page 7 to select input connector	H = Vivid High Output	1 = Silicone	F = Wave	1 = Side 2 = Top	W = White + Diffused	1 = Static	H = 2200K J = 2700K L = 3000K M = 3500K N = 4000K Q = 5700K	2 = Epistar SMD LED Chip + CRI80 3.66W/ft (12W/m) 4.57W/ft (15W/m) 3 = Epistar SMD LED Chip + CRI90 3.66W/ft (12W/m)

C		D	E	F		G	
	2C	D	F		F		
POWER	VOLTAGE + CIRCUIT TYPE**	ORDER UNIT LENGTH	OUTPUT CONNECTOR		MOUNTING PROFILE	MOUNTING ACCESSORIES	POWER SUPPLIES & CONTROLS:
G = 3.66W/ft (12W/m) CRI80 CRI90 I = 4.57W/ft (15W/m) CRI80	2C = 24V DC CR	D = 2.19in (55.6mm)	See Page 7 to select output connector		See Page 16 to select mounting profiles	See Page 22 to select accessory	By Others By GLLS

*Maximum IP and IK ratings achievable with appropriate accessories, and cable diameter: silicone static = 0.26in (6.5mm). **The Current Regulated (CR) Integrated Circuit extends max run length. Do not use a CC or CR power supply, as it may cause damage.

HIGH OUTPUT WAVE: SILICONE - 24V

Indoor & Outdoor Rated Linear Flex Profile - Static Whites

COMPLEXITY, SIMPLIFIED.

A

MECHANICAL

ASSEMBLY

Fixtures are carefully assembled using high-quality components to ensure durability and performance. Each unit is built to meet strict specifications, with attention to electrical safety, thermal management, and optical alignment.

OVERALL & CUTTING LENGTHS

Fixtures feature defined overall lengths and specific cutting increments for easy customization. Cutting must be done at marked points to maintain proper function and consistent light output.

JACKET COLOR

The white with diffused white lens covers provide a clean, uniform appearance while softening light output for reduced glare. It enhances visual comfort and delivers smooth, even illumination ideal for architectural and display applications.

BENDING RADIUS

Do not bend smaller than allowed minimum bend diameter, or may cause damage to the light & void warranty.

OPERATION

LIGHT ENGINE

Static Pulse Width Modulation (PWM) light engines deliver stable, flicker-free light at a fixed brightness. They offer consistent color and reliable performance for long-term applications.

ELECTRICAL

Designed to meet UL, CE, and RoHS standards, they feature overload, overvoltage, and short-circuit protection, along with low EMI and efficient thermal management for safe, reliable operation.

DIMMING

Dimming of 24V PWM fixtures is achieved via the driver or decoder used in the system. Depending on the selected driver/decoder, control options can include 0–10V, DMX, or DALI, enabling smooth, flicker-free dimming while maintaining consistent color and performance. Note: DMX and DALI are supported at the system level, not natively by the fixture.

GENERAL

WARRANTY

Limited 10-Year Warranty against defects in materials and manufacturing. Coverage applies to properly installed and maintained products. Damage from misuse or improper installation is not covered. GLLS may repair, replace, or issue credit for eligible claims.

LUMEN MAINTENANCE

GLLS static lighting fixtures are tested to IES LM-84 and projected with IES TM-28 to ensure consistent lumen maintenance. Fixtures are designed to retain at least 70% of their initial brightness (L70) over a 10-year lifespan when properly installed and operated.

CERTIFICATION

Tested to UL2108 Class 2 by Underwriters Laboratory for use in the USA and Canada. Exceeds ANSI C78.377A, ANSI C136.31, CE, and RoHS standards. Must be used under Class 2 ratings to maintain certification.

UL Certificate #: E347880

Report Referance #: E347880-20130503

TESTING

OPTICAL TESTING

TEST	RESULTS
Spectrum Analysis	IES LM 79 (Lumen, CCT, CRI, XY, SDCM, Wavelength)
Photometric Distribution	IES LM 79
Lumen Maintenance & Lifetime	IES LM 84 & IES TM28

TEMPERATURE TESTING

TEST	RESULTS
Normal Temperature Test	UL1598 & UL2388 & IEC60598-1 & IEC60598-2-21
Abnormal Operation Test	UL1598 & UL2388 & IEC60598-1 & IEC60598-2-21

ENVIRONMENTAL TESTING

TEST	RESULTS
Salt Water Immersion	IEC60598-1, Sailinity 4%
Salt Spray Test	IEC60068-2-11
Outdoor Exposure	Manufacturer-defined
Flame Resistance	UL94
UV Exposure	ASTMG 154, ISO 4892-3, UVA @ 340nm & 55
IPX8	EN 60598-1: 2015+A1:2018 Clause 9.2.2 & 9.2.8
Temperature Shock(Silicone)	Manufacturer-defined, -40°C - 60°C (typical temperature range)
Constant Temperature	Manufacturer-defined
12mm Needle Flame Test (Silicone)	IEC60695-11-5
650 Glow-wire Test (Silicone)	IEC60695-2-10

DURABILITY TESTING

TEST	RESULTS
Bending Test	Manufacturer-defined, 500 cycles
Tensile Test	Manufacturer-defined, > The weight of light in max.
Twist Test	Manufacturer-defined, >200 cycles
Ball Impact	UL1598 & UL2388 & IEC60598-1 & IEC60598-2-21
IK	IEC62262

HIGH OUTPUT WAVE: SILICONE - 24V

Indoor & Outdoor Rated Linear Flex Profile - Static Whites

COMPLEXITY, SIMPLIFIED.

B

LED COLORS

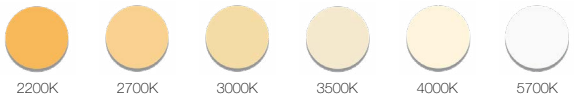

FIXTURE SPECIFICATIONS & OPTICAL PARAMETERS - 3.66W/FT (12W/M) - SIDE BEND

COLOR	LED COUNT	1 CONNECTOR FULL/DYNAMIC*	2 CONNECTORS FULL/DYNAMIC**	UL CLASS 2 MAX RUN***	FIXTURE COLOR TOLERANCE****	WAVELENGTH/ CCT	LED CRI	LED COLOR TOLERANCE	LUMEN COUNT	LEGACY ORDER CODE
2200K	38 LEDs/ft (126 LEDs/m)	49.2ft (15m) / N/A	98.4ft (30m) / N/A	26ft (8m)	3 SDCM	2238±82K	82~87	<2.3SDCM	189lm/ft (620lm/m)	SH16E1012WE22K24DC12
2200K	38 LEDs/ft (126 LEDs/m)	49.2ft (15m) / N/A	98.4ft (30m) / N/A	26ft (8m)	3 SDCM	2238±82K	91-97	<2.3SDCM	143lm/ft (470lm/m)	SH16E1012WE22R24DC12
2700K	38 LEDs/ft (126 LEDs/m)	49.2ft (15m) / N/A	98.4ft (30m) / N/A	26ft (8m)	3 SDCM	2725±115K	82~87	<2.3SDCM	201lm/ft (660lm/m)	SH16E1012WE27K24DC12
2700K	38 LEDs/ft (126 LEDs/m)	49.2ft (15m) / N/A	98.4ft (30m) / N/A	26ft (8m)	3 SDCM	2725±115K	91-97	<2.3SDCM	159lm/ft (520lm/m)	SH16E1012WE27R24DC12
3000K	38 LEDs/ft (126 LEDs/m)	49.2ft (15m) / N/A	98.4ft (30m) / N/A	26ft (8m)	3 SDCM	3045±140K	82~87	<2.3SDCM	201lm/ft (660lm/m)	SH16E1012WE30K24DC12
3000K	38 LEDs/ft (126 LEDs/m)	49.2ft (15m) / N/A	98.4ft (30m) / N/A	26ft (8m)	3 SDCM	3045±140K	91-97	<2.3SDCM	159lm/ft (520lm/m)	SH16E1012WE30R24DC12
3500K	38 LEDs/ft (126 LEDs/m)	49.2ft (15m) / N/A	98.4ft (30m) / N/A	26ft (8m)	3 SDCM	3465±170K	82~87	<2.3SDCM	201lm/ft (660lm/m)	SH16E1012WE35K24DC12
3500K	38 LEDs/ft (126 LEDs/m)	49.2ft (15m) / N/A	98.4ft (30m) / N/A	26ft (8m)	3 SDCM	3465±170K	91-97	<2.3SDCM	165lm/ft (540lm/m)	SH16E1012WE35R24DC12
4000K	38 LEDs/ft (126 LEDs/m)	49.2ft (15m) / N/A	98.4ft (30m) / N/A	26ft (8m)	3 SDCM	3985±225K	82~87	<2.3SDCM	201lm/ft (660lm/m)	SH16E1012WE40K24DC12
4000K	38 LEDs/ft (126 LEDs/m)	49.2ft (15m) / N/A	98.4ft (30m) / N/A	26ft (8m)	3 SDCM	3985±225K	91-97	<2.3SDCM	165lm/ft (540lm/m)	SH16E1012WE40R24DC12
5700K	38 LEDs/ft (126 LEDs/m)	49.2ft (15m) / N/A	98.4ft (30m) / N/A	26ft (8m)	3 SDCM	5665±355K	82~87	<2.3SDCM	198lm/ft (650lm/m)	SH16E1012WE57K24DC12

*Run length is based on a static full load with voltage drop calculated using a 0.3 m (0.98 ft) cable with silicone seamless connectors, excluding connector length—refer to specifications for details. **For runs over 65.62ft (20m), recommended to limit each to 65.62ft (20m) for easier handling. ***For UL Class 2 calculations, GLLS uses a maximum output of 96 W / 96 VA for 24 V circuits, unless otherwise confirmed by the listed driver. All runs are assumed to be single-feed from one Class 2 output. Dual-feeding from separate drivers does not qualify as Class 2 unless the run is electrically split into isolated sections. ****Silicone products maintain ≤3 SDCM within a single production run and <5 SDCM between production runs.

HIGH OUTPUT WAVE: SILICONE - 24V

Indoor & Outdoor Rated Linear Flex Profile - Static Whites

COMPLEXITY, SIMPLIFIED.

B

LED COLORS



2200K 2700K 3000K 3500K 4000K 5700K

FIXTURE SPECIFICATIONS & OPTICAL PARAMETERS - 3.66W/FT (12W/M) - TOP BEND

COLOR	LED COUNT	1 CONNECTOR FULL/DYNAMIC*	2 CONNECTORS FULL/DYNAMIC**	UL CLASS 2 MAX RUN***	FIXTURE COLOR TOLERANCE****	WAVELENGTH/ CCT	LED CRI	LED COLOR TOLERANCE	LUMEN COUNT	LEGACY ORDER CODE
2200K	38 LEDs/ft (126 LEDs/m)	49.2ft (15m) / N/A	98.4ft (30m) / N/A	26ft (8m)	3 SDCM	2238±82K	82~87	<2.3SDCM	265lm/ft (870lm/m)	SH16E0012WE22K24DC12
2200K	38 LEDs/ft (126 LEDs/m)	49.2ft (15m) / N/A	98.4ft (30m) / N/A	26ft (8m)	3 SDCM	2238±82K	91-97	<2.3SDCM	186lm/ft (610lm/m)	SH16E0012WE22R24DC12
2700K	38 LEDs/ft (126 LEDs/m)	49.2ft (15m) / N/A	98.4ft (30m) / N/A	26ft (8m)	3 SDCM	2725±115K	82~87	<2.3SDCM	274lm/ft (900lm/m)	SH16E0012WE27K24DC12
2700K	38 LEDs/ft (126 LEDs/m)	49.2ft (15m) / N/A	98.4ft (30m) / N/A	26ft (8m)	3 SDCM	2725±115K	91-97	<2.3SDCM	198lm/ft (650lm/m)	SH16E0012WE27R24DC12
3000K	38 LEDs/ft (126 LEDs/m)	49.2ft (15m) / N/A	98.4ft (30m) / N/A	26ft (8m)	3 SDCM	3045±140K	82~87	<2.3SDCM	290lm/ft (950lm/m)	SH16E0012WE30K24DC12
3000K	38 LEDs/ft (126 LEDs/m)	49.2ft (15m) / N/A	98.4ft (30m) / N/A	26ft (8m)	3 SDCM	3045±140K	91-97	<2.3SDCM	198lm/ft (650lm/m)	SH16E0012WE30R24DC12
3500K	38 LEDs/ft (126 LEDs/m)	49.2ft (15m) / N/A	98.4ft (30m) / N/A	26ft (8m)	3 SDCM	3465±170K	82~87	<2.3SDCM	290lm/ft (950lm/m)	SH16E0012WE35K24DC12
3500K	38 LEDs/ft (126 LEDs/m)	49.2ft (15m) / N/A	98.4ft (30m) / N/A	26ft (8m)	3 SDCM	3465±170K	91-97	<2.3SDCM	210lm/ft (690lm/m)	SH16E0012WE35R24DC12
4000K	38 LEDs/ft (126 LEDs/m)	49.2ft (15m) / N/A	98.4ft (30m) / N/A	26ft (8m)	3 SDCM	3985±225K	82~87	<2.3SDCM	287lm/ft (940lm/m)	SH16E0012WE40K24DC12
4000K	38 LEDs/ft (126 LEDs/m)	49.2ft (15m) / N/A	98.4ft (30m) / N/A	26ft (8m)	3 SDCM	3985±225K	91-97	<2.3SDCM	210lm/ft (690lm/m)	SH16E0012WE40R24DC12
5700K	38 LEDs/ft (126 LEDs/m)	49.2ft (15m) / N/A	98.4ft (30m) / N/A	26ft (8m)	3 SDCM	5665±355K	82~87	<2.3SDCM	287lm/ft (940lm/m)	SH16E0012WE57K24DC12

*Run length is based on a static full load with voltage drop calculated using a 0.3 m (0.98 ft) cable with silicone seamless connectors, excluding connector length—refer to specifications for details. **For runs over 65.62ft (20m), recommended to limit each to 65.62ft (20m) for easier handling. ***For UL Class 2 calculations, GLLS uses a maximum output of 96 W / 96 VA for 24 V circuits, unless otherwise confirmed by the listed driver. All runs are assumed to be single-feed from one Class 2 output. Dual-feeding from separate drivers does not qualify as Class 2 unless the run is electrically split into isolated sections. ****Silicone products maintain ≤3 SDCM within a single production run and <5 SDCM between production runs.

HIGH OUTPUT WAVE: SILICONE - 24V

Indoor & Outdoor Rated Linear Flex Profile - Static Whites

COMPLEXITY, SIMPLIFIED.

B

LED COLORS

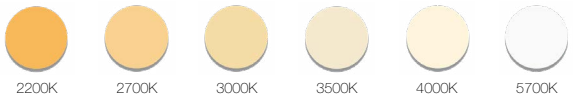

FIXTURE SPECIFICATIONS & OPTICAL PARAMETERS - 4.57W/FT (15W/M) - SIDE BEND

COLOR	LED COUNT	1 CONNECTOR FULL/DYNAMIC*	2 CONNECTORS FULL/DYNAMIC	UL CLASS 2 MAX RUN**	FIXTURE COLOR TOLERANCE***	WAVELENGTH/ CCT	LED CRI	LED COLOR TOLERANCE	LUMEN COUNT	LEGACY ORDER CODE
2200K	33 LEDs/ft (108 LEDs/m)	32.8ft (10m) / N/A	65.6ft (20m) / N/A	21ft (6m)	3 SDCM	2238 ± 66K	82-87	2.3SDCM	152lm/ft (500lm/m)	SH16E1012WE22K24DC
2700K	33 LEDs/ft (108 LEDs/m)	32.8ft (10m) / N/A	65.6ft (20m) / N/A	21ft (6m)	3 SDCM	2725 ± 85K	82-87	2.3SDCM	183lm/ft (600lm/m)	SH16E1012WE27K24DC
3000K	33 LEDs/ft (108 LEDs/m)	32.8ft (10m) / N/A	65.6ft (20m) / N/A	21ft (6m)	3 SDCM	3045 ± 105K	82-87	2.3SDCM	183lm/ft (600lm/m)	SH16E1012WE30K24DC
3500K	33 LEDs/ft (108 LEDs/m)	32.8ft (10m) / N/A	65.6ft (20m) / N/A	21ft (6m)	3 SDCM	3465 ± 245K	82-87	2.3SDCM	213.4lm/ft (700lm/m)	SH16E1012WE35K24DC
4000K	33 LEDs/ft (108 LEDs/m)	32.8ft (10m) / N/A	65.6ft (20m) / N/A	21ft (6m)	3 SDCM	3985 ± 150K	82-87	2.3SDCM	213.4lm/ft (700lm/m)	SH16E1012WE40K24DC
5700K	33 LEDs/ft (108 LEDs/m)	32.8ft (10m) / N/A	65.6ft (20m) / N/A	21ft (6m)	3 SDCM	5669 ± 305K	82-87	2.3SDCM	213.4lm/ft (700lm/m)	SH16E1012WE57K24DC

FIXTURE SPECIFICATIONS & OPTICAL PARAMETERS - 4.57W/FT (15W/M) - TOP BEND

COLOR	LED COUNT	1 CONNECTOR FULL/DYNAMIC*	2 CONNECTORS FULL/DYNAMIC	UL CLASS 2 MAX RUN**	FIXTURE COLOR TOLERANCE***	WAVELENGTH/ CCT	LED CRI	LED COLOR TOLERANCE	LUMEN COUNT	LEGACY ORDER CODE
2200K	33 LEDs/ft (108 LEDs/m)	32.8ft (10m) / N/A	65.6ft (20m) / N/A	21ft (6m)	3 SDCM	2238 ± 66K	82-87	2.3SDCM	183lm/ft (600lm/m)	SH16E0012WE22K24DC
2700K	33 LEDs/ft (108 LEDs/m)	32.8ft (10m) / N/A	65.6ft (20m) / N/A	21ft (6m)	3 SDCM	2725 ± 85K	82-87	2.3SDCM	213.4lm/ft (700lm/m)	SH16E0012WE27K24DC
3000K	33 LEDs/ft (108 LEDs/m)	32.8ft (10m) / N/A	65.6ft (20m) / N/A	21ft (6m)	3 SDCM	3045 ± 105K	82-87	2.3SDCM	213.4lm/ft (700lm/m)	SH16E0012WE30K24DC
3500K	33 LEDs/ft (108 LEDs/m)	32.8ft (10m) / N/A	65.6ft (20m) / N/A	21ft (6m)	3 SDCM	3465 ± 245K	82-87	2.3SDCM	244lm/ft (800lm/m)	SH16E0012WE35K24DC
4000K	33 LEDs/ft (108 LEDs/m)	32.8ft (10m) / N/A	65.6ft (20m) / N/A	21ft (6m)	3 SDCM	3985 ± 150K	82-87	2.3SDCM	244lm/ft (800lm/m)	SH16E0012WE40K24DC
5700K	33 LEDs/ft (108 LEDs/m)	32.8ft (10m) / N/A	65.6ft (20m) / N/A	21ft (6m)	3 SDCM	5669 ± 305K	82-87	2.3SDCM	244lm/ft (800lm/m)	SH16E0012WE57K24DC

*Run length is based on a static full load with voltage drop calculated using a 0.3 m (0.98 ft) cable with silicone seamless connectors, excluding connector length—refer to specifications for details. **For UL Class 2 calculations, GLLS uses a maximum output of 96 W / 96 VA for 24 V circuits, unless otherwise confirmed by the listed driver. All runs are assumed to be single-feed from one Class 2 output. Dual-feeding from separate drivers does not qualify as Class 2 unless the run is electrically split into isolated sections. ***Silicone products maintain ≤3 SDCM within a single production run and <5 SDCM between production runs.

HIGH OUTPUT WAVE: SILICONE - 24V

Indoor & Outdoor Rated Linear Flex Profile - Static Whites

COMPLEXITY, SIMPLIFIED.

C

POWER & VOLTAGE

COLOR	VOLTAGE + CIRCUIT TYPE*	POWER CONSUMPTION
2200K	24V DC CR	3.66W/ft (12W/m)
2200K		4.57W/ft (15W/m)
2700K		3.66W/ft (12W/m)
2700K		4.57W/ft (15W/m)
3000K		3.66W/ft (12W/m)
3000K		4.57W/ft (15W/m)
3500K		3.66W/ft (12W/m)
3500K		4.57W/ft (15W/m)
4000K		3.66W/ft (12W/m)
4000K		4.57W/ft (15W/m)
5700K		3.66W/ft (12W/m)
5700K		4.57W/ft (15W/m)

*The Current Regulated (CR) Integrated Circuit extends max run length. Do not use a CC or CR power supply, as it may cause damage.

D

CUTTING INSTRUCTIONS

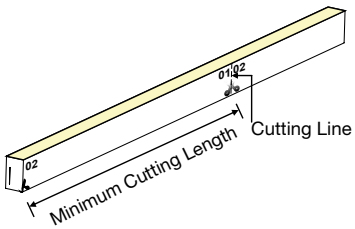

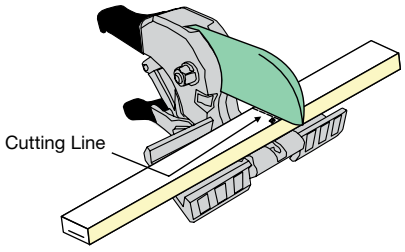

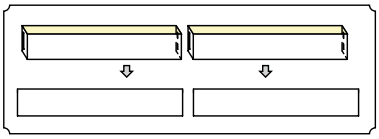

G = 3.66W/FT (12W/M)

COLOR	ORDER UNIT (CUTTING UNIT)
2200K	2.19in (55.6mm) (7 LEDs)
2700K	
3000K	
3500K	
4000K	
5700K	

G = 4.57W/FT (15W/M)

COLOR	ORDER UNIT (CUTTING UNIT)
2200K	2.19in (55.6mm) (6 LEDs)
2700K	
3000K	
3500K	
4000K	
5700K	

HIGH OUTPUT WAVE: SILICONE - 24V

Indoor & Outdoor Rated Linear Flex Profile - Static Whites

COMPLEXITY, SIMPLIFIED.

E

COMPATIBLE CONNECTORS

INPUT - 01

F					
PROFILE	BEND	WIRING	INPUT CONNECTOR TYPE	INPUT ORIENTATION + TYPE	INPUT CABLE LENGTH (LEAD WIRE)

OUTPUT - 02

F					
PROFILE	BEND	WIRING	OUTPUT CONNECTOR TYPE	OUTPUT ORIENTATION + TYPE	OUTPUT CABLE LENGTH (LEAD WIRE)
F = Wave	1 = Side 2 = Top 4 = N/A (End Cap)	1 = 2 Wire (Static/Dim To Warm) 0 = N/A (End Cap)	6 = Swivel	A = End Exit I = End Cap	1 = 0.98ft (0.3m) 2 = 3.28ft (1m) 8 = N/A
			7 = Snap	A = End Exit B = Bottom Exit C = Side Left Exit D = Side Right Exit E = End Jumper H = Power T-Feed I = End Cap	1 = 0.98ft (0.3m) 2 = 3.28ft (1m) 3 = 9.84ft (3m) 4 = 16ft (5m) 5 = 32.81ft (10m) 6 = 49.21ft (15m) 7 = 65.62ft (20m) 8 = N/A
			8 = Click	A = End Exit I = End Cap	1 = 0.98ft (0.3m) 2 = 3.28ft (1m) 3 = 9.84ft (3m) 4 = 16ft (5m) 8 = N/A
			2 = Silicone Seamless	A = End Exit B = Bottom Exit C = Side Left Exit D = Side Right Exit E = End Jumper H = Power T-Feed I = End Cap	1 = 0.98ft (0.3m) 2 = 3.28ft (1m) 3 = 9.84ft (3m) 4 = 16ft (5m) 5 = 32.81ft (10m) 6 = 49.21ft (15m) 7 = 65.62ft (20m) 8 = N/A
			4 = Silicone Submersible	A = End Exit B = Bottom Exit C = Side Left Exit D = Side Right Exit I = End Cap	9 = 1.64ft (0.5m) 4 = 16ft (5m) 5 = 32.8ft (10m) 8 = N/A

LEGACY CONNECTOR ORDER CODE

XX	16E	X	00	XX	XX	X	XX	XXX	X
PRODUCT TYPE	PROFILE	BENDING	LIGHT EMITTING	FUNCTIONALITY	CONNECTOR TYPE	FIXTURE END	EXIT TYPE	LENGTH	
NA = DIY Accessories FA = Factory Accessories	16E = Wave	1 = Side 2 = Top	00 = 16E	2W = Static/DTW 0W = For End Cap	SV = Swivel CL = Click SC = Snap SE = Seamless PO = Submersible	1 = Input Side 2 = Output Side 0 = Jumpers/T-feeds/ Seamless Bottom/ Seamless End 3 = Input/Output	EN = End BO = Bottom SL = Side Left SR = Side Right EJ = End Jumper BJ = Bottom Jumper TF = Power Feed EC = End Cap	0M3 = 0.98ft (30cm) 01M = 3.28ft (1m) 03M = 9.84ft (3m) 05M = 16ft (5m) 10M = 32.81ft (10m) 000 = For End Cap	P = Power or For End Cap S = Signal & Power

HIGH OUTPUT WAVE: SILICONE - 24V

Indoor & Outdoor Rated Linear Flex Profile - Static Whites

COMPLEXITY, SIMPLIFIED.

E

SWIVEL CONNECTOR





NOTES:
1. Connector Tolerance ±0.02in (0.5mm)
2. Cable diameter: Static & Dim to Warm Silicone = 0.26in (6.5mm)
3. Do not apply force to the feed cable
4. Ensure Max. Cable Lengths are followed according to wire gage to avoid voltage drop

IP20, Omni-directional Cable, Tool-less, Mini Size. Recommended for indoor dry environments and for onsite length adjustments. Under the simple and convenient design concept, we developed our swivel connector, which is superb for indoor concealed installation in narrow space thanks to its mini size and omni-directional cable. Navigated by user manual, tool-free and quick assembly can be realized, and Press & Seal design enables the functions of energization and dust-proof rapidly. DIY or custom factory assembly.

END EXIT: F#16A#



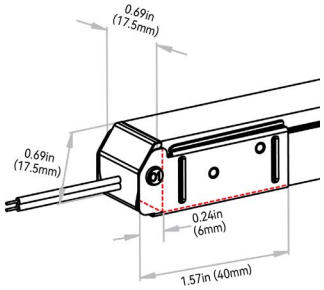

END CAP: F406I#



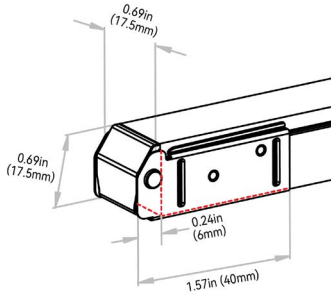

HIGH OUTPUT WAVE: SILICONE - 24V

Indoor & Outdoor Rated Linear Flex Profile - Static Whites

COMPLEXITY, SIMPLIFIED.

E

SNAP CONNECTOR





NOTES:
1. Connector Tolerance ±0.02in (0.5mm)
2. Cable diameter: Static, Tunable, SPI & Dim to Warm Silicone = 0.26in (6.5mm)
3. Do not apply force to the feed cable
4. Ensure Max. Cable Lengths are followed according to wire gage to avoid voltage drop
5. Snap Connectors - Top bending fixture not available for Tunable White & SPI-PIXEL. Not available for SPI-RGB or SPI-RGBW both bending directions.

IP67, tool-less; good solution for protection from water ingression; larger connector & anti-wicking ferrule. Recommended for wet environments and on-site length adjustments. To seal the end of light and ensure the waterproof in case of any cutting or extension on site, Insulfit technology prevents the water or vapor ingress from the end of the light. DryWire technology applied on the cable eliminates the capillary phenomenon through wires, which secured the long-term reliability in any wading environments. DIY or custom factory assembly.

END EXIT: F#17A#



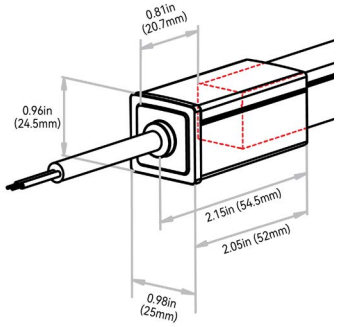

END CAP: F407I8



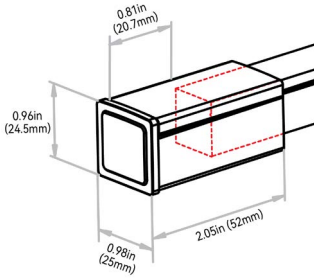

SCREW LOCK CONNECTOR ACCESSORY - IP67



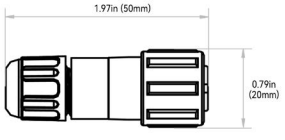

NOTE: The tolerance is ±0.08in (2mm).

ANTI-WICKING FERRULE:



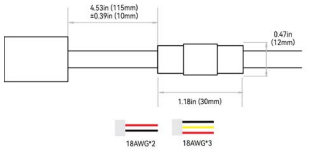

NOTES:
1. The anti-wicking ferrule is located at 4.53in (115mm) (±0.39in [±10mm] tolerance) from the connector on the cable. For protection against water ingress.
2. The removal of anti-wicking ferrule will void the warranty if any water ingression caused by it.

HIGH OUTPUT WAVE: SILICONE - 24V

Indoor & Outdoor Rated Linear Flex Profile - Static Whites

COMPLEXITY, SIMPLIFIED.

E

BOTTOM EXIT: F#17B#



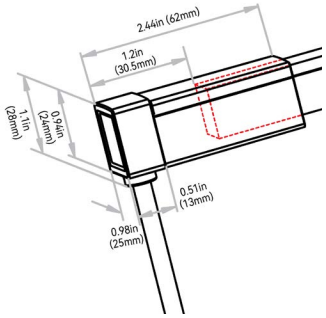

END JUMPER: F#17E1



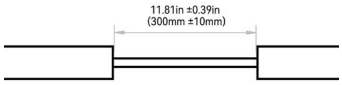

SIDE LEFT EXIT: F#17C#



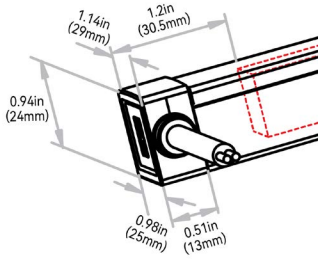

POWER T-FEED: F#17H#

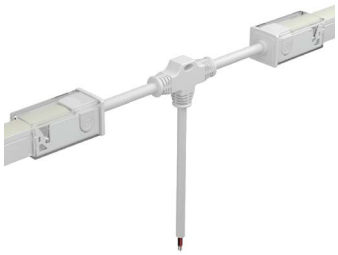

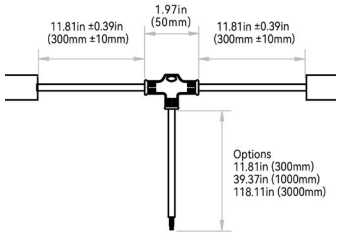

SIDE RIGHT EXIT: F#17D#



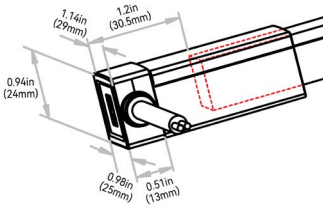

HIGH OUTPUT WAVE: SILICONE - 24V

Indoor & Outdoor Rated Linear Flex Profile - Static Whites

COMPLEXITY, SIMPLIFIED.

E

CLICK CONNECTOR





NOTES:
1. Connector Tolerance ±0.02in (0.5mm)
2. Cable diameter: Static, Tunable, SPI & Dim to Warm Silicone = 0.26in (6.5mm)
3. Do not apply force to the feed cable
4. Ensure Max. Cable Lengths are followed according to wire gage to avoid voltage drop
5. Click Connectors - Top bending fixture not available for Tunable White & SPI-PIXEL. Not available for SPI-RGB or SPI-RGBW both bending directions.

IP67; tool-less & mini size. Recommended for outdoor environments & for onsite length adjustments. Click connector, a new type of field-assembly connector for outdoor use, brass casing, features unexceptional adaptability and excellent weather resistance. It achieves the unique balance between waterproof performance and physical dimension, highly functional yet incredibly minimal, giving you an extraordinary visual experience due to the less dark area at the jointing area. The whole assembling process is tool-less and quick, benefiting from its simple but smart structure design. The remarkable innovation lies in the invisible waterproof pretreatment on the cable, which facilitates the wiring and slotting on the site greatly as the extra anti-wicking ferrule on the cable is no longer needed. DIY or custom factory assembly.

END EXIT: F#18A#



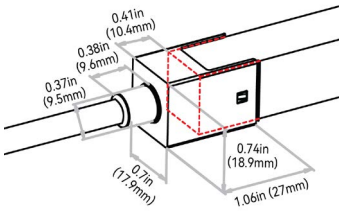

END CAP: F408I8



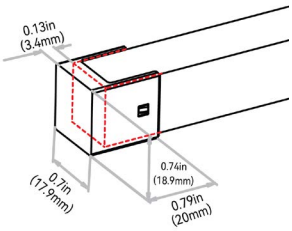

SCREW LOCK CONNECTOR ACCESSORY - IP67



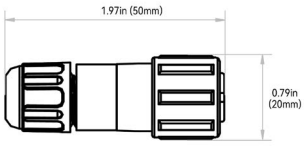

NOTE: The tolerance is ±0.08in (2mm).

HIGH OUTPUT WAVE: SILICONE - 24V

Indoor & Outdoor Rated Linear Flex Profile - Static Whites

COMPLEXITY, SIMPLIFIED.

E

SILICONE SEAMLESS CONNECTOR





NOTES:
1. Connector Tolerance ±0.02in (0.5mm)
2. Cable diameter: Static, Tunable, RGB, RGBW, SPI Silicone & Dim to Warm = 0.26in (6.5mm) & DMX Silicone = 0.27in (6.8mm)
3. Do not apply force to the feed cable
4. Ensure Max. Cable Lengths are followed according to wire gage to avoid voltage drop

IP68; seamless; precise low profile dimension; high grade quality silicone & anti-wicking ferrule. Recommended for; wet environments; custom predetermined lengths; high/ low temperatures; increased humidity; direct UV exposure; harsh working conditions & increased handling forces during installation. Precision milling and special glue Silicone liquid injection-moulded workmanship enables an almost consistent size between connectors and lightbody, and the transparent terminal of the connector allows the seamless effects spliced end by end. DryWire technology applied on the cable eliminates the capillary phenomenon through wires, which secured the long-term reliability in outdoor or any wet environments. Custom factory assembly.

END EXIT: F#12A#



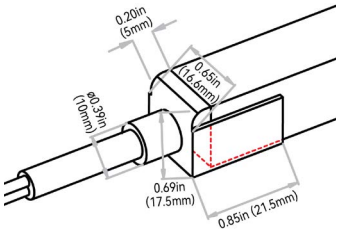

END CAP: F402I8



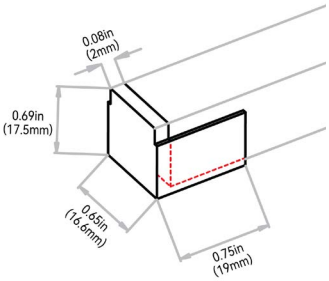

SCREW LOCK CONNECTOR ACCESSORY - IP67



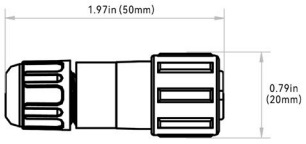

NOTE: The tolerance is ±0.08in (2mm).

ANTI-WICKING FERRULE:



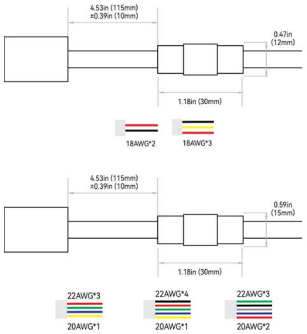

NOTES:
1. The anti-wicking ferrule is located at 4.53in (115mm) (±0.39in [±10mm] tolerance) from the connector on the cable. For protection against water ingress.
2. The removal of anti-wicking ferrule will void the warranty if any water ingression caused by it.

HIGH OUTPUT WAVE: SILICONE - 24V

Indoor & Outdoor Rated Linear Flex Profile - Static Whites

COMPLEXITY, SIMPLIFIED.

E

BOTTOM EXIT: F#12B#



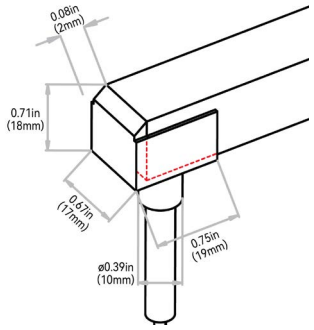

END JUMPER: F#12E1



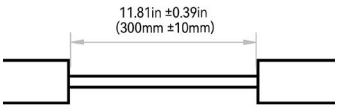

SIDE LEFT EXIT: F#12C#



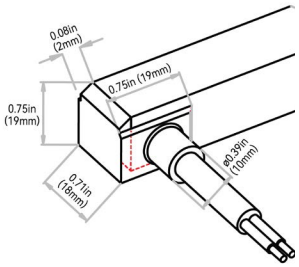

POWER T-FEED: F#12H#



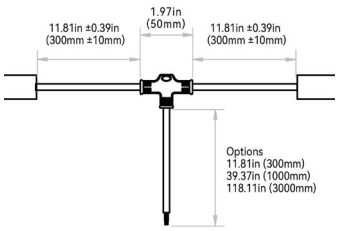

SIDE RIGHT EXIT: F#12D#



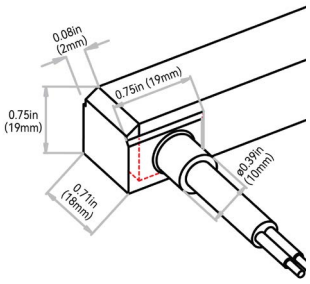

HIGH OUTPUT WAVE: SILICONE - 24V

Indoor & Outdoor Rated Linear Flex Profile - Static Whites

COMPLEXITY, SIMPLIFIED.

E

SILICONE SUBMERSIBLE CONNECTOR





NOTES:
1. Connector Tolerance ±0.02in (0.5mm)
2. Cable diameter: Static, Tunable & SPI Silicone = 0.26in (6.5mm)
3. Do not apply force to the feed cable
4. Ensure Max. Cable Lengths are followed according to wire gage to avoid voltage drop
5. Silicone Submersible UL676 Connectors - Top bending fixture not available for Tunable White & SPI-PIXEL

IP68; extremely durable, underwater, UL676 rated. Recommended for; long-term submersed in wet environments up to the depth of 16.40ft (5m) (water is skin safe for extended periods); high temperature and humidity environments (mounting surface temperature <140°F(60°C); custom predetermined lengths and larger connector; harsh working conditions & increased handling forces during installation. Custom factory assembly.

END EXIT: F#14A#

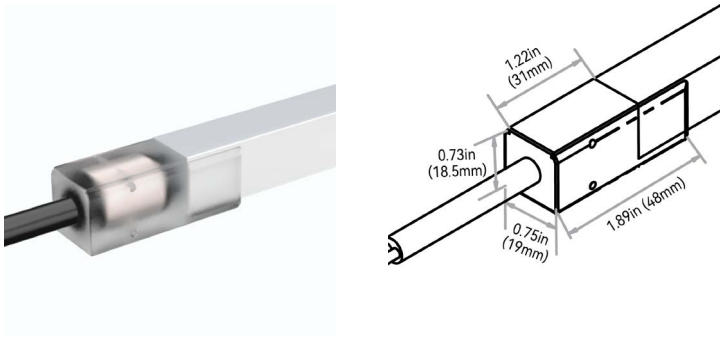

END CAP: F404I8

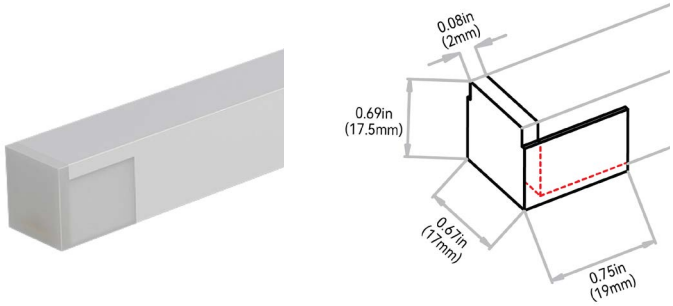

SCREW LOCK CONNECTOR ACCESSORY - IP67

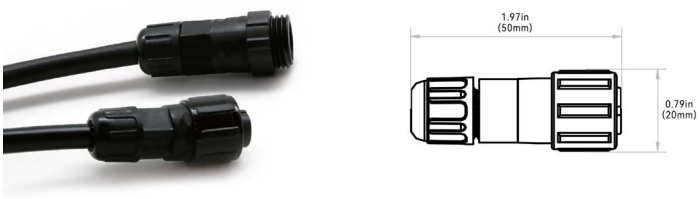

NOTE: The tolerance is ±0.08in (2mm).

BOTTOM EXIT: F#14B#

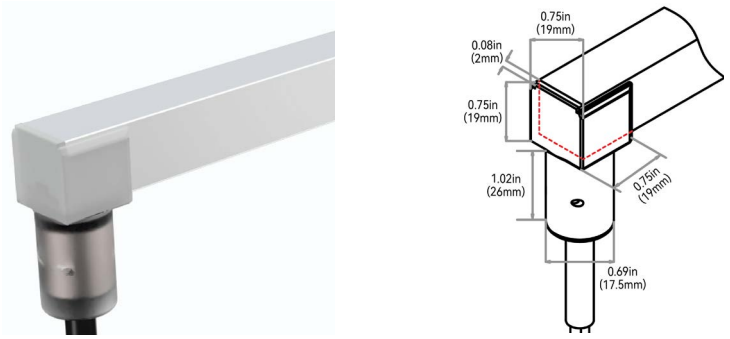

HIGH OUTPUT WAVE: SILICONE - 24V

Indoor & Outdoor Rated Linear Flex Profile - Static Whites

COMPLEXITY, SIMPLIFIED.

E

SIDE LEFT EXIT: F#14C#

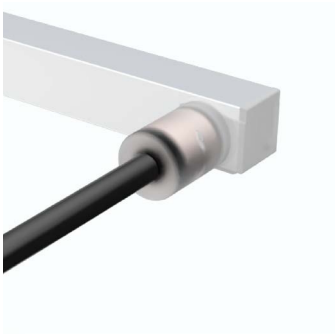

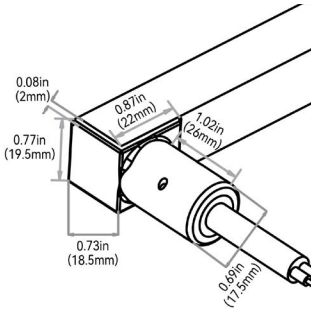

SIDE RIGHT EXIT: F#14D#

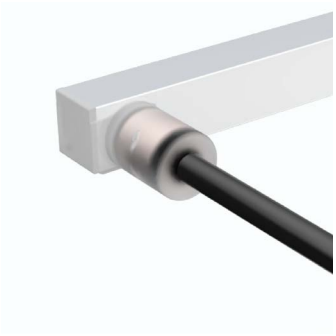

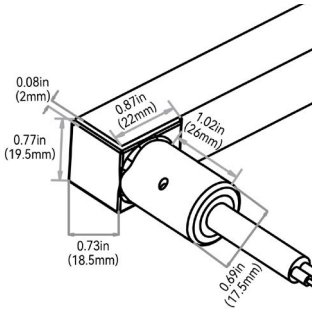

HIGH OUTPUT WAVE: SILICONE - 24V

Indoor & Outdoor Rated Linear Flex Profile - Static Whites

COMPLEXITY, SIMPLIFIED.

F

MOUNTING PROFILES

		F		
MOUNTING PROFILE TYPE	**STANDARD LENGTH**	**PROFILE**	**COLOR**	**BEND**
A1 = Aluminum Basic	2 = 1.38in (35mm) 3 = 19.68in (500mm) 5 = 39.37in (1000mm) 6 = 78.74in (2000mm)	F = Wave	1 = Standard	4 = N/A
A2 = Aluminum Recessed	2 = 1.38in (35mm) 3 = 19.68in (500mm) 5 = 39.37in (1000mm) 6 = 78.74in (2000mm)			
A3 = Aluminum Recessed Silicone Grip	1 = 0.79in (20mm) 3 = 19.68in (500mm) 5 = 39.37in (1000mm) 6 = 78.74in (2000mm)			
A4 = Aluminum Silicone Grip	1 = 0.79in (20mm) 3 = 19.68in (500mm) 5 = 39.37in (1000mm) 6 = 78.74in (2000mm)			
A5 = Aluminum Flexible	3 = 19.68in (500mm) 5 = 39.37in (1000mm)			1 = Side
A8 = Aluminum Raceway	3 = 19.68in (500mm) 5 = 39.37in (1000mm) 6 = 78.74in (2000mm)			4 = N/A
A9 = Aluminum Raceway Suspended	3 = 19.68in (500mm) 5 = 39.37in (1000mm) 6 = 78.74in (2000mm)			
P1 = Plastic Reinforced	2 = 1.38in (35mm) 3 = 19.68in (500mm) 5 = 39.37in (1000mm) 6 = 78.74in (2000mm)			
C1 = Silicone Flexible	F = 2.16in (55mm) B = 4.33in (110mm) C = 7.87in (200mm) 3 = 19.68in (500mm) 5 = 39.37in (1000mm)		2 = Black 3 = White 0 = Custom	
S1 = Stainless Steel Clips	2 = 1.38in (35mm)		1 = Standard	

HIGH OUTPUT WAVE: SILICONE - 24V

Indoor & Outdoor Rated Linear Flex Profile - Static Whites

COMPLEXITY, SIMPLIFIED.

F

ALUMINUM PROFILE - BASIC

High-quality 6063 aluminum with thin-wall, light-weight design to fit the fixture tightly. It is deformation and rust resistant, and cost-effective.
Please refer to install manual for proper installation practices..



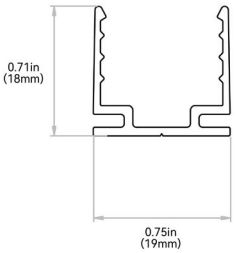

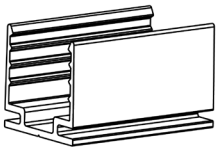

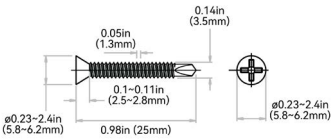



Tolerance: ± 0.01in (0.3mm)

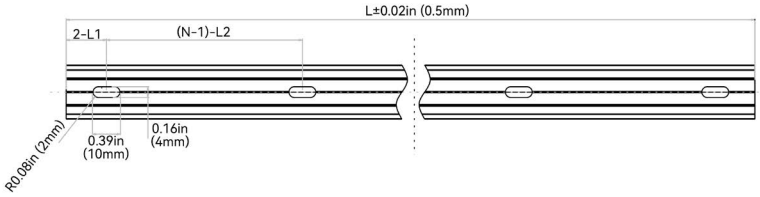

NOTES: 1. 2-L1 refers to two of symmetric L1 in each piece of profile.
2. (N-1)-L2 refers to (N minus one) of symmetric L2 in each piece of profile.
"N" hereby stands for its corresponding "Hole Number" in the below table

ORDER CODE	LEGACY CODE	STANDARD LENGTH	L1	L2	SLOTTED HOLE	HOLE #
A12F14	CL16RAL3C5SD	1.38in (35mm)	0.69in (17.5mm)	N/A	0.16*0.39in (4*10mm)	1
A13F14	CH16RAL0M5SD	19.68in (500mm)	1.97in (50mm)	7.87in (200mm)	0.16*0.39in (4*10mm)	3
A15F14	CH16RAL01MSD	39.37in (1000mm)	3.93in (100mm)	7.87in (200mm)	0.16*0.39in (4*10mm)	5
A16F14	CH16RAL02MSD	78.74in (2000mm)	3.93in (100mm)	7.87in (200mm)	0.16*0.39in (4*10mm)	10

ALUMINUM PROFILE - RECESSED

High-quality 6063 aluminum with thin-wall, light-weight design to fit the fixture tightly. Recommended on projects with lighting mounted recessed in a cavity so only the lens is shown. It is deformation and rust resistant, and cost-effective. Please refer to install manual for proper installation practices.



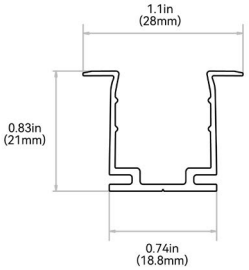

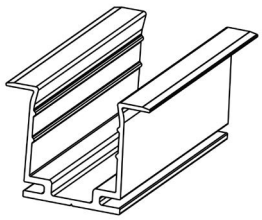

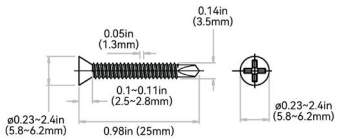



Tolerance: ± 0.01in (0.3mm)

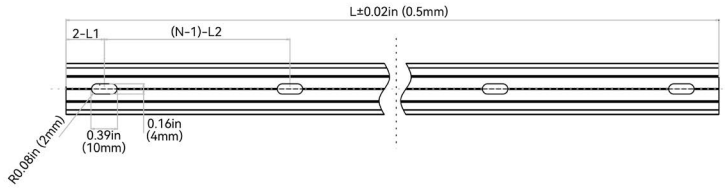

NOTES: 1. 2-L1 refers to two of symmetric L1 in each piece of profile.
2. (N-1)-L2 refers to (N minus one) of symmetric L2 in each piece of profile.
"N" hereby stands for its corresponding "Hole Number" in the below table

ORDER CODE	LEGACY ORDER CODE	STANDARD LENGTH	L1	L2	SLOTTED HOLE	HOLE #
A22F14	CL16RRA3C5SD	1.38in (35mm)	0.69in (17.5mm)	N/A	0.16*0.39in (4*10mm)	1
A23F14	CH16RRA0M5SD	19.68in (500mm)	1.97in (50mm)	7.87in (200mm)	0.16*0.39in (4*10mm)	3
A25F14	CH16RRA01MSD	39.37in (1000mm)	3.93in (100mm)	7.87in (200mm)	0.16*0.39in (4*10mm)	5
A26F14	CH16RRA02MSD	78.74in (2000mm)	3.93in (100mm)	7.87in (200mm)	0.16*0.39in (4*10mm)	10

HIGH OUTPUT WAVE: SILICONE - 24V

Indoor & Outdoor Rated Linear Flex Profile - Static Whites

COMPLEXITY, SIMPLIFIED.

F

ALUMINUM PROFILE - RECESSED - SILICONE GRIP

High-quality 6063 aluminum with thin-wall, light-weight design to fit the fixture tightly. Includes a serrated silicone grip insert designed to hold fixture with additional force. Recommended on projects mounted upside down with lighting mounted recessed in a cavity so only the lens is shown. It is deformation and rust resistant, and cost-effective. Please refer to install manual for proper installation practices.



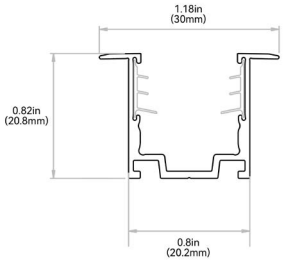

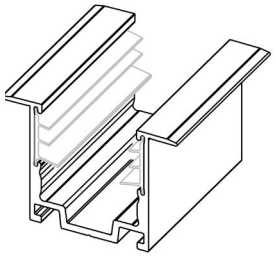

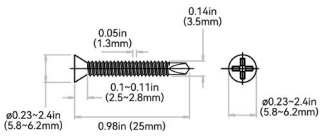

Tolerance: ± 0.01in (0.3mm)

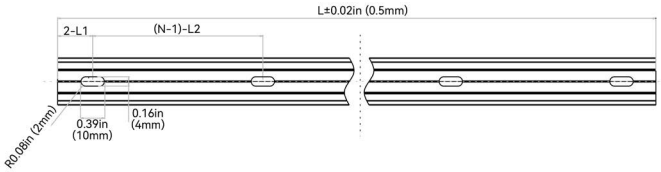

NOTES: 1. 2-L1 refers to two of symmetric L1 in each piece of profile.
2. (N-1)-L2 refers to (N minus one) of symmetric L2 in each piece of profile.
"N" hereby stands for its corresponding "Hole Number" in the below table

ORDER CODE	LEGACY ORDER CODE	STANDARD LENGTH	L1	L2	SLOTTED HOLE	HOLE #
A31F14	CL16RRA02CSE	0.79in (20mm)	0.39in (10mm)	N/A	0.16*0.39in (4*10mm)	1
A33F14	CH16RRA0M5SE	19.68in (500mm)	1.97in (50mm)	7.87in (200mm)	0.16*0.39in (4*10mm)	3
A35F14	CH16RRA01MSE	39.37in (1000mm)	3.93in (100mm)	7.87in (200mm)	0.16*0.39in (4*10mm)	5
A36F14	CH16RRA02MSE	78.74in (2000mm)	3.93in (100mm)	7.87in (200mm)	0.16*0.39in (4*10mm)	10

ALUMINUM PROFILE - SILICONE GRIP

High-quality 6063 aluminum with thin-wall, light-weight design. Includes a serated silicone grip insert designed to hold fixture with additional force. Recommended on projects mounted upside down. It is deformation and rust resistant, and cost-effective. Please refer to install manual for proper installation practices.



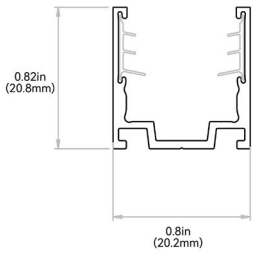

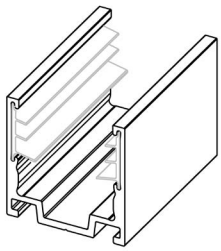

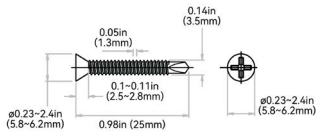

Tolerance: ± 0.01in (0.3mm)

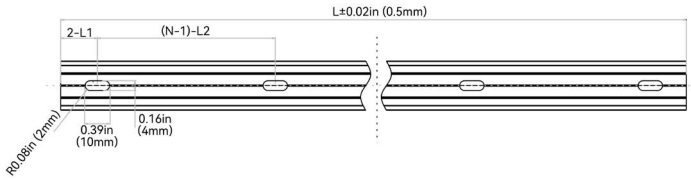

NOTES: 1. 2-L1 refers to two of symmetric L1 in each piece of profile.
2. (N-1)-L2 refers to (N minus one) of symmetric L2 in each piece of profile.
"N" hereby stands for its corresponding "Hole Number" in the below table

ORDER CODE	LEGACY ORDER CODE	STANDARD LENGTH	L1	L2	SLOTTED HOLE	HOLE #
A41F14	CL16RAL02CSE	0.79in (20mm)	0.39in (10mm)	N/A	0.16*0.39in (4*10mm)	1
A43F14	CH16RAL0M5SE	19.68in (500mm)	1.97in (50mm)	7.87in (200mm)	0.16*0.39in (4*10mm)	3
A45F14	CH16RAL01MSE	39.37in (1000mm)	3.93in (100mm)	7.87in (200mm)	0.16*0.39in (4*10mm)	5
A46F14	CH16RAL02MSE	78.74in (2000mm)	3.93in (100mm)	7.87in (200mm)	0.16*0.39in (4*10mm)	10

HIGH OUTPUT WAVE: SILICONE - 24V

Indoor & Outdoor Rated Linear Flex Profile - Static Whites

COMPLEXITY, SIMPLIFIED.

F

ALUMINUM PROFILE - FLEXIBLE

It is an expanded design of the flexible aluminum profile, and caters for the continuously streamlined aesthetics of curve shape. The secondary precision cutting process, not only maintains the advantage of clamping force, but also enables the two-way side bending directions with super shape memory. Please refer to install manual for proper installation practices.

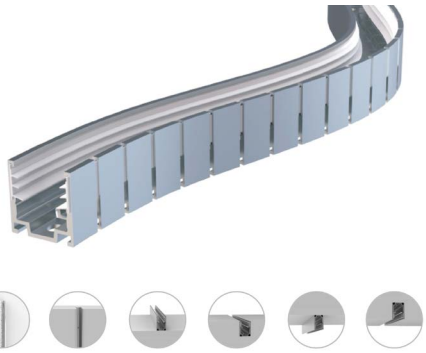

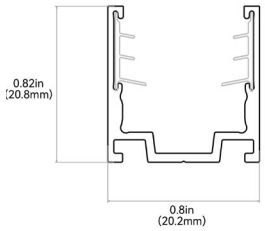

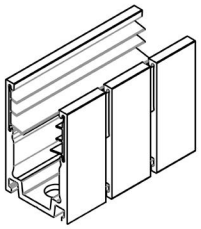

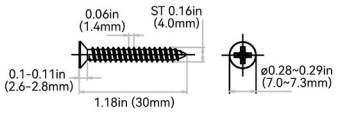

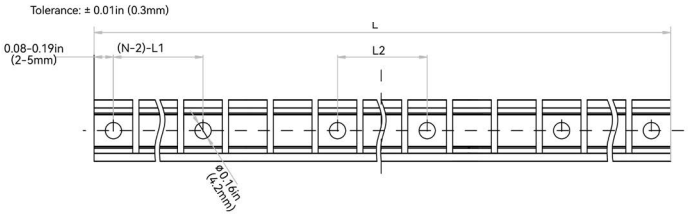

NOTES: 1. 2-L1 refers to two of symmetric L1 in each piece of profile.
2. (N-1)-L2 refers to (N minus one) of symmetric L2 in each piece of profile.
"N" hereby stands for its corresponding "Hole Number" in the below table

ORDER CODE	LEGACY ORDER CODE	STANDARD LENGTH	L1	L2	SLOTTED HOLE	HOLE #
A53F11	CH16FAL0M5SE	19.68in (500mm)	4.34in (110.3mm)	1.92in (48.9mm)	Ø 0.17in (4.2mm)	6
A55F11	CH16FAL01MSE	39.37in (1000mm)	4.59in (116.5mm)	3.89in (98.8mm)	Ø 0.17in (4.2mm)	10

ALUMINUM PROFILE - RACEWAY

High-quality 6063 thin-wall aluminum, light-weight design featuring hidden cables. The raceway space is enough to conceal seamless connectors with bottom feed and the general male/female connectors. It is superb for the facade where tidiness is required and the scenarios that lack of space for wiring. Please refer to install manual for proper installation practices.



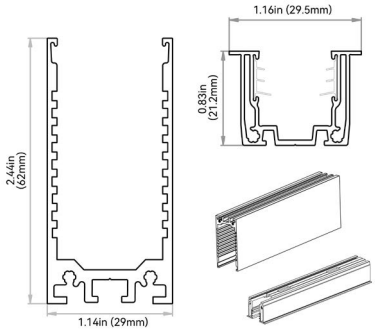

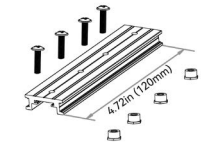

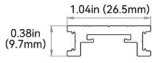

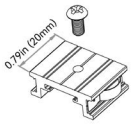

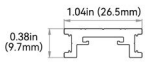

Tolerance: ± 0.01in (0.3mm)

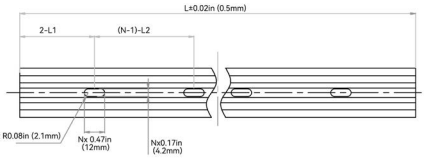



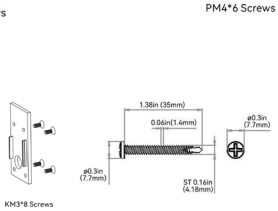

NOTES: 1. 2-L1 refers to two of symmetric L1 in each piece of profile.
2. (N-1)-L2 refers to (N minus one) of symmetric L2 in each piece of profile.
"N" hereby stands for its corresponding "Hole Number" in the below table

ORDER CODE	LEGACY ORDER CODE	STANDARD LENGTH	L1	L2	SLOTTED HOLE	HOLE #
A83F14	CH16RAL0M5RS	19.68in (500mm)	1.97in (50mm)	7.87in (200mm)	0.18*0.47in (4.5*12mm)	3
A85F14	CH16RAL01MRS	39.37in (1000mm)	3.93in (100mm)	7.87in (200mm)	0.18*0.47in (4.5*12mm)	5
A86F14	CH16RAL02MRS	78.74in (2000mm)	3.93in (100mm)	7.87in (200mm)	0.18*0.47in (4.5*12mm)	10

HIGH OUTPUT WAVE: SILICONE - 24V

Indoor & Outdoor Rated Linear Flex Profile - Static Whites

COMPLEXITY, SIMPLIFIED.

F

ALUMINUM PROFILE - RACEWAY - SUSPENDED

High-quality 6063 thin-wall aluminum, light-weight design featuring hidden cables and suspended by cables from the ceiling. The raceway space is enough to conceal seamless connectors with bottom feed and the general male/female connectors. It is superb for the facade where tidiness is required and the scenarios that lack of space for wiring. Please refer to install manual for proper installation practices.

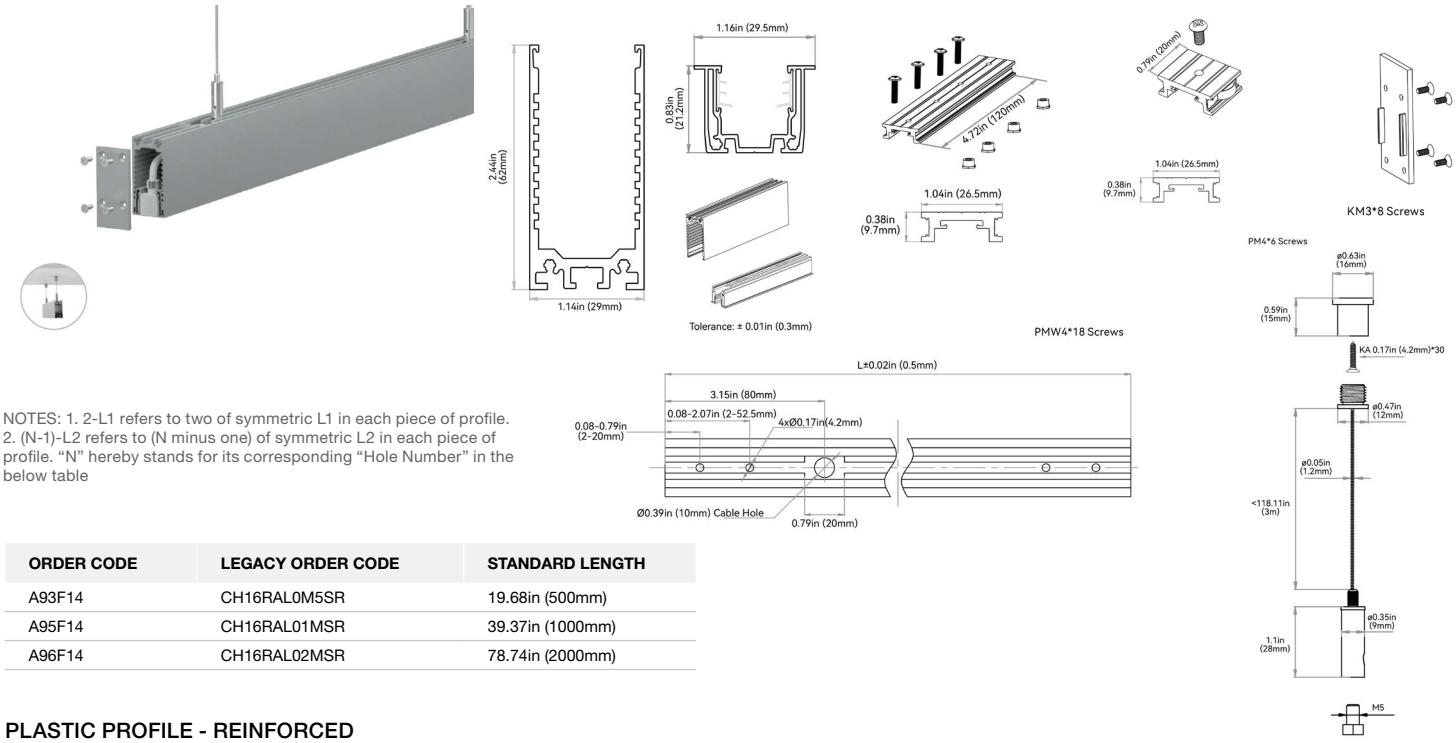

NOTES: 1. 2-L1 refers to two of symmetric L1 in each piece of profile.
2. (N-1)-L2 refers to (N minus one) of symmetric L2 in each piece of profile. “N” hereby stands for its corresponding “Hole Number” in the below table

ORDER CODE	LEGACY ORDER CODE	STANDARD LENGTH
A93F14	CH16RAL0M5SR	19.68in (500mm)
A95F14	CH16RAL01MSR	39.37in (1000mm)
A96F14	CH16RAL02MSR	78.74in (2000mm)

PLASTIC PROFILE - REINFORCED

High Quality rigid plastic designed to securely hold fixtures. Recommended for use in extreme environments susceptible to increased water/humidity (SPA's and pools). Please refer to install manual for proper installation practices.

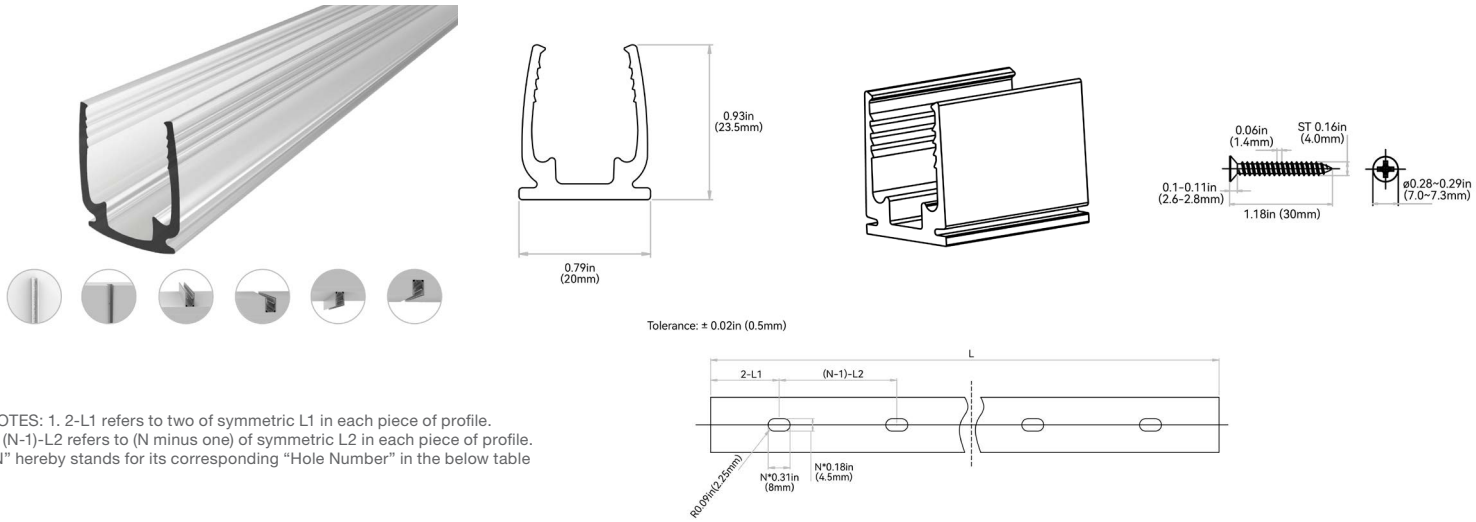

NOTES: 1. 2-L1 refers to two of symmetric L1 in each piece of profile.
2. (N-1)-L2 refers to (N minus one) of symmetric L2 in each piece of profile.
“N” hereby stands for its corresponding “Hole Number” in the below table

ORDER CODE	LEGACY ORDER CODE	STANDARD LENGTH	L1	L2	SLOTTED HOLE	HOLE #
P12F14	CL16RTP3C5SD	1.38in (35mm)	0.69in (17.5mm)	N/A	0.18*0.31in (4.5*8mm)	1
P13F14	CH16RTP0M5SD	19.68in (500mm)	1.97in (50mm)	7.87in (200mm)	0.18*0.31in (4.5*8mm)	3
P15F14	CH16RTP01MSD	39.37in (1000mm)	3.93in (100mm)	7.87in (200mm)	0.18*0.31in (4.5*8mm)	5
P16F14	CH16RTP02MSD	78.74in (2000mm)	3.93in (100mm)	7.87in (200mm)	0.18*0.31in (4.5*8mm)	10

HIGH OUTPUT WAVE: SILICONE - 24V

Indoor & Outdoor Rated Linear Flex Profile - Static Whites

COMPLEXITY, SIMPLIFIED.

F

SILICONE PROFILE - FLEXIBLE

An all-in-one mounting profile designed to unleash your creativity. This profile not only provides flexibility in installation methods, but also overcomes bending limitations by offering both top and side bending in a single profile. Fully encapsulated in UL-certified silicone, it excels in UV, weather, and corrosion resistance, making it suitable for underwater, high and low temperature enviroments. Elegant and square in appearance, it is available in black or white standard colors, or bespoke colors to blend in with the background. Supported by innovative serrated silicone fins, its clamping strength is strong enough to secure any installation method. Please refer to install manual for proper installation practices. Side and top bending.

NOTES: With this mounting profile, bend fixtures only along their designated axis — side-bending fixtures sideways, top-bending fixtures topways.



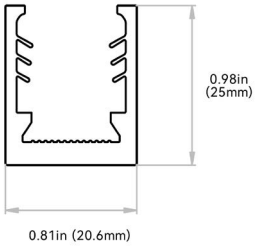

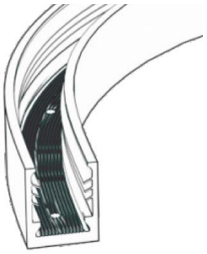

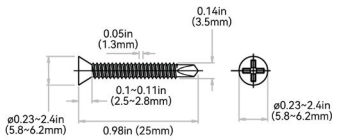

Tolerance: ± 0.01in (0.3mm)

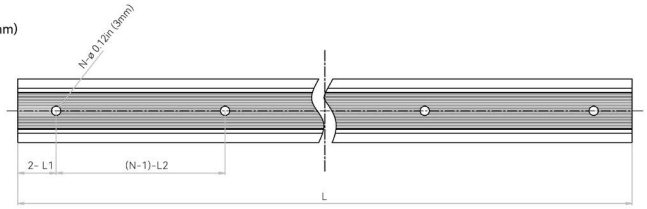

NOTES: 1. 2-L1 refers to two of symmetric L1 in each piece of profile.
2. (N-1)-L2 refers to (N minus one) of symmetric L2 in each piece of profile.
"N" hereby stands for its corresponding "Hole Number" in the below table

ORDER CODE	LEGACY ORDER CODE: WHITE	LEGACY ORDER CODE: BLACK	STANDARD LENGTH	L1	L2	SLOTTED HOLE	HOLE #
C1FF#4	CH16FAN5C5SEW	CH16FAN5C5SEB	2.16in (55mm)	0.49in (12.5mm)	1.18in (30mm)	Ø 0.12in (3mm)	2
C1BF#4	CH16FAN1C1SEW	CH16FAN1C1SEB	4.33in (110mm)	0.46in (11.6mm)	3.48in (88.4mm)	Ø 0.12in (3mm)	2
C1CF#4	CH16FAN0M2SEW	CH16FAN0M2SEB	7.87in (200mm)	0.46in (11.6mm)	3.48in (88.4mm)	Ø 0.12in (3mm)	3
C13F#4	CH16FAN0M5SEW	CH16FAN0M5SEB	19.68in (500mm)	1.14in (29mm)	3.48in (88.4mm)	Ø 0.12in (3mm)	6
C15F#4	CH16FAN01MSEW	CH16FAN01MSEB	39.37in (1000mm)	0.54in (13.8mm)	3.48in (88.4mm)	Ø 0.12in (3mm)	12

STAINLESS STEEL PROFILE - CLIP

It uses grade 316 stainless steel with excellent property of deformation and rust resistance. The material makes it suitable for humid coastal surroundings and weak acid-base industrial environments that other mounting profiles can't accommodate. The structural design and material characteristics collectively ensure a tight clamping force. It's very convenient and reliable even for suspended installation in the curve shape. Please refer to install manual for proper installation practices.





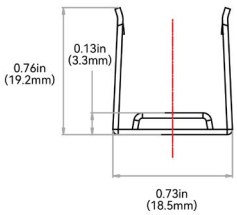

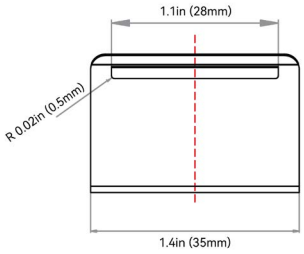

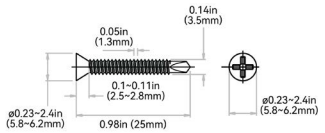

Tolerance: ± 0.01in (0.3mm)

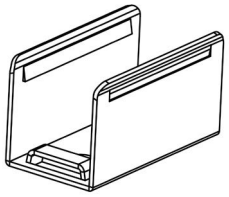

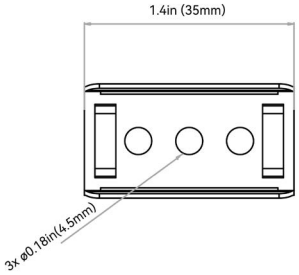

ORDER CODE	LEGACY ORDER CODE	STANDARD LENGTH	SLOTTED HOLE	HOLE #
S12F14	CL16RSS3C5SD	1.38in (35mm)	ø 0.18in (4.5mm)	3

G

MOUNTING ACCESSORIES

MOUNTING ACCESSORY TYPE	PROFILE
MA1 = Pivot Bracket	O = All Profiles
MA2 = Rotary Bracket	
MA3 = Side Bracket	
MA4 = Ceiling Clip	F = Wave
MA5 - Suspended Rod + Clip	
MA6 = Suspended Wire Kit	
MA7 = Alignment Bracket - Aluminum Basic	
MA8 = Alignment Bracket - Aluminum Silicone Grip	

PIVOT BRACKET: MA1O | MA00PMB00000

Applicable to all mounting profiles.



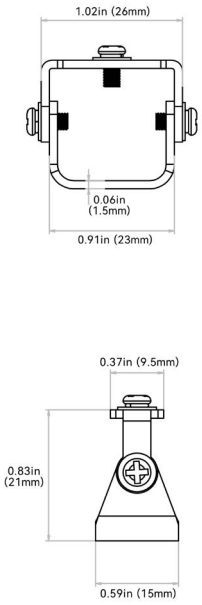

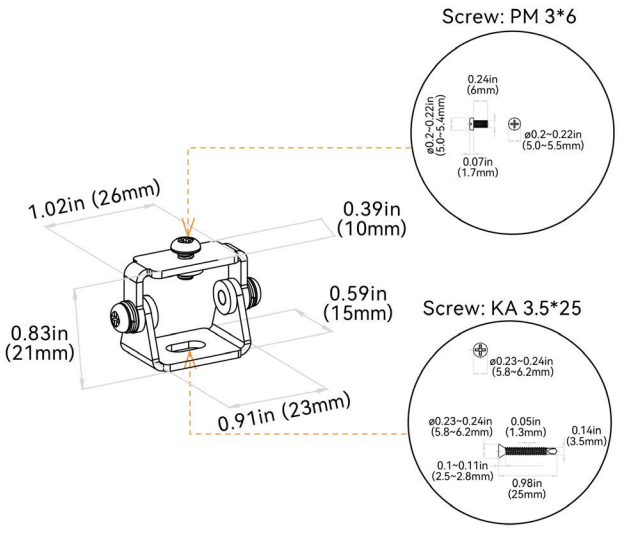

HIGH OUTPUT WAVE: SILICONE - 24V

Indoor & Outdoor Rated Linear Flex Profile - Static Whites

COMPLEXITY, SIMPLIFIED.

G

ROTARY BRACKET: MA2O | MA00BRL00000

Applicable to all mounting profiles.





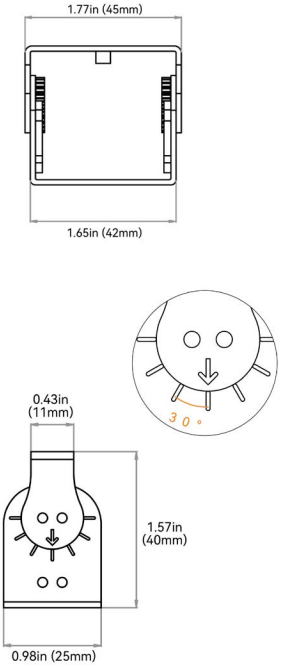

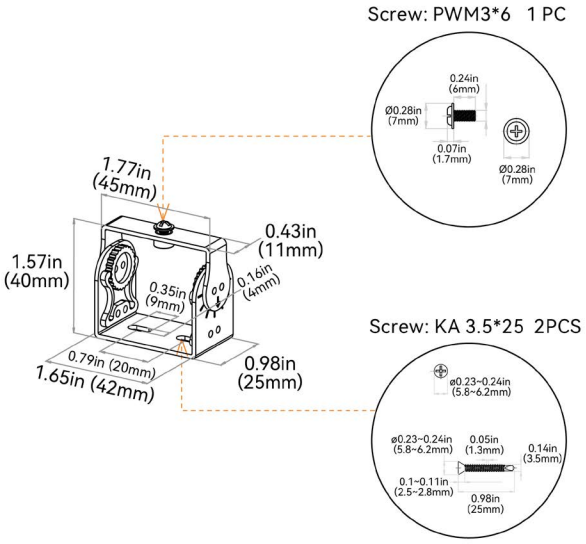

SIDE MOUNTING BRACKET: MA3O | MA00SMB00000

Applicable to all mounting profiles.





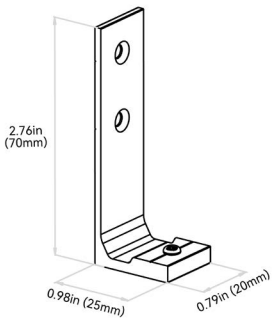

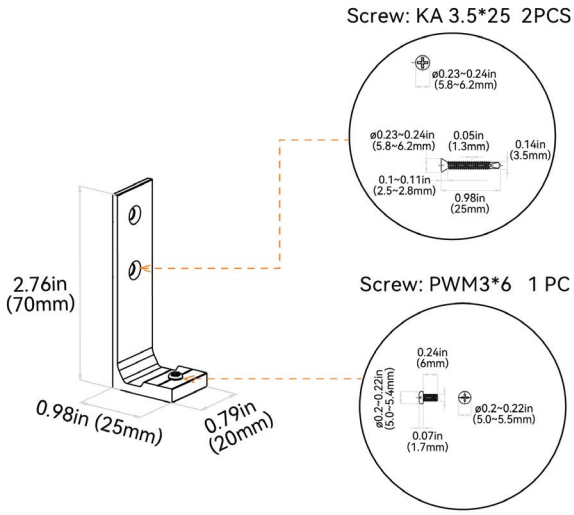

HIGH OUTPUT WAVE: SILICONE - 24V

Indoor & Outdoor Rated Linear Flex Profile - Static Whites

COMPLEXITY, SIMPLIFIED.

G

CEILING CLIP BRACKET: MA4F | MA16CMC00000

Applicable to aluminum profile - recessed - silicone grip

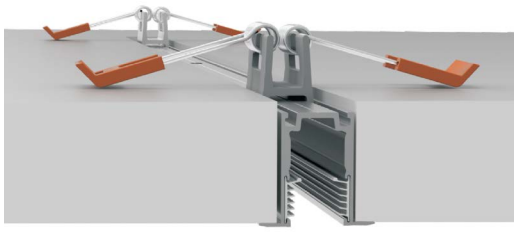



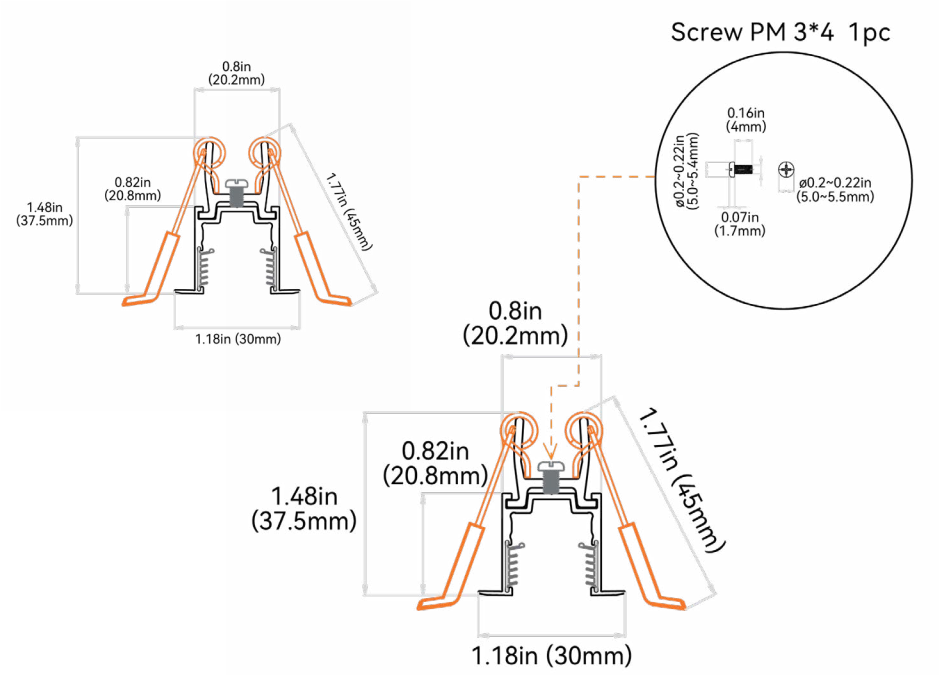

SUSPENDED WIRE: MA6F | MA16SMC000SW

Applicable to Aluminum Profile - Silicone Grip. 2 kits of stainless steel wires for 39.37in (1000mm) of profile & 3 kits of stainless steel wires for 78.74in (2000mm) of profile.





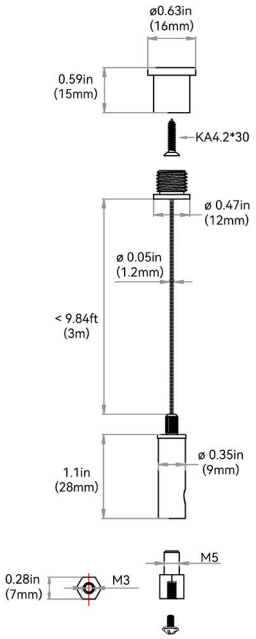

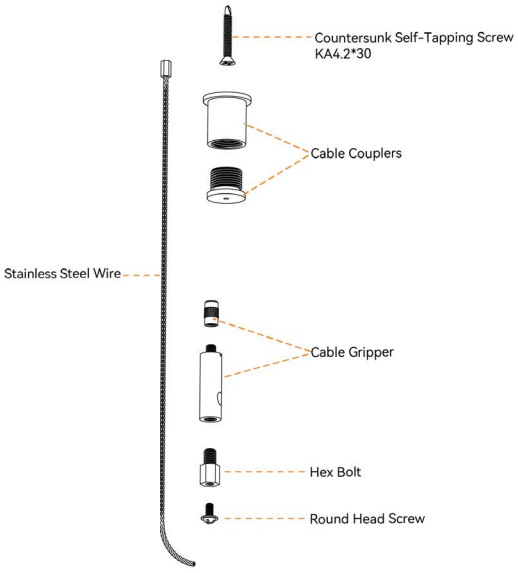

G

SUSPENDED MOUNTING CLIP + ROD: MA5F | MA16SMC0M5SR



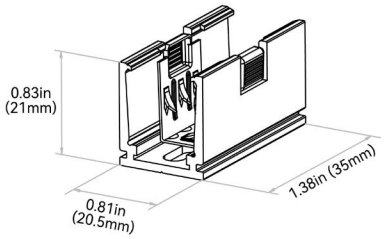

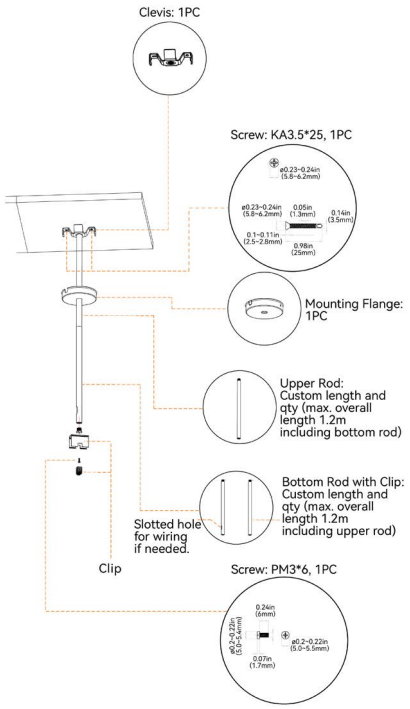

ALIGNMENT BRACKET - ALUMINUM BASIC: MA7F | CH16AL0M45JB

Applicable to aluminum basic

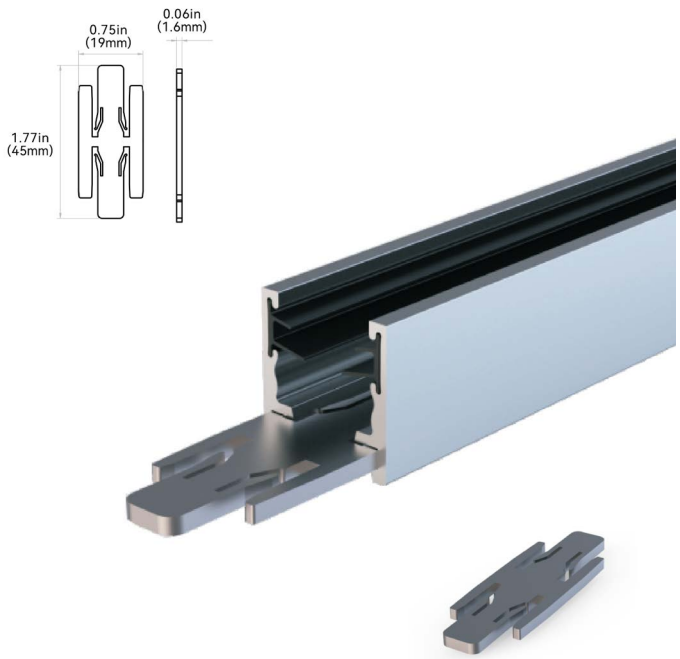

ALIGNMENT BRACKET - ALUMINUM SILICONE GRIP: MA8F | CH16FAL0M45JB

Applicable to aluminum silicone grip

