IMDT V2H SBC

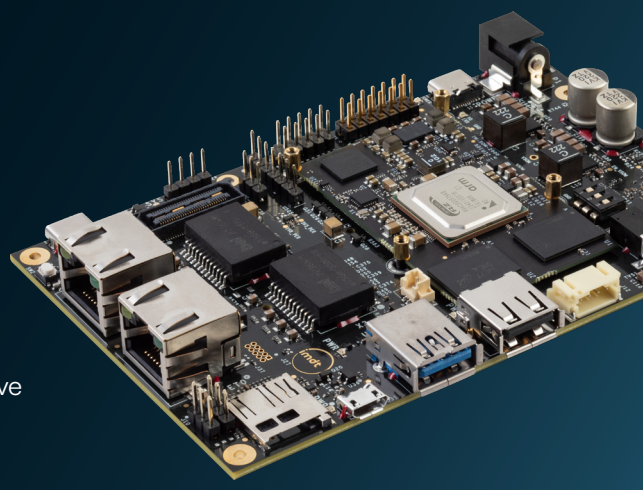

IMDT's V2H SBC carrier board transforms the IMDT V2H SoM into a compact, high-performance mini-computer. This fully customizable small form factor SBC features a cost-effective system design ideal for diverse applications in robotics, drones, and smart city projects. The V2H SBC provides a multitude of assembly options, personalized and adjusted to meet specific customer needs, alongside comprehensive onboard connectivity. It presents developers with an energy-efficient solution that occupies minimal space.

- Based on IMDT V2H SOM
- Quad Cortex®-A55 (1.8GHz) CPU
- Integrated AI accelerator, DRP-AI3
- Multi camera connectivity, up to 4 x 4-lane MIPI CSI
- Internal and external ISPs
- 4K encoder/decoder
- Dimensions (WxLxH): 125 x 80 x 20mm

Available for pre-order
Starting from 299 USD

RENESAS
PARTNER PROGRAM

Multi-camera solution

Full connectivity

Small form factor

Low power

Key Features

- Multi camera connectivity, up to 4x 4-lane MIPI CSI
- Quad core A55 + Dual cortex R8 + Cortex M33
- Built in AI accelerator
- 4K encoder/decoder
- Various communication / storage / network interfaces
- Accelerators engines
- On-chip SRAM
- Audio
- Analog/digital converter(ADC)
- Internal temperature sensors
- Security

ISO/IEC 27001:2022 CERTIFIED COMPANY
IMQA CERTIFICATION UK LTD.

CERTIFIED ISO 9001:2015 CERTIFIED

IMDT LTD. 2024 ©

Product Specification

Specification	Description
CPU:	RZ/V2H, 4xA55+M33+2xR8, VPU, NPU, GPU, ISP
Memories:	QSPI NOR flash, 64MBytes Secure EEPROM Micro SD card slot
Connectivity:	2.4/5GHz Wi-Fi 4, Dual-band + Bluetooth 5.2 BR/EDR/LE 2 x RJ-45 , 1000Base-T, Optional PoE 1 x USB 3.2 type-A connector 2 x USB 2.0 connectors M.2 NGFF Key-E can be used for Wi-Fi module or AI accelerator M.2 NGFF Key-B can be used for cellular Module RS-232 transceiver on board CAN-FD transceiver on board
Camera:	4 x 4-lane MIPI CSI interface for cameras via IAS connectors ISP

Specification	Description
Audio:	3.5mm Audio jack for stereo headset with mic Onboard PDM digital microphone
Sensors:	Temperature & Humidity 6-DOF IMU 3-Axis magnetometer
Power:	USB-C PD power POE+GTP (with addition of power supply module) Optional external power supply
Misc	RTC Fan control Boot DIP-Switch LEDs Debug - On board UART to USB bridge with USB-C connector
Extensions:	SPI, I2C, I2S, PDM, GPIOs, Analog headers Extension connectors with power and I2C
Dimensions:	125 x 80 x 20mm

Block diagram

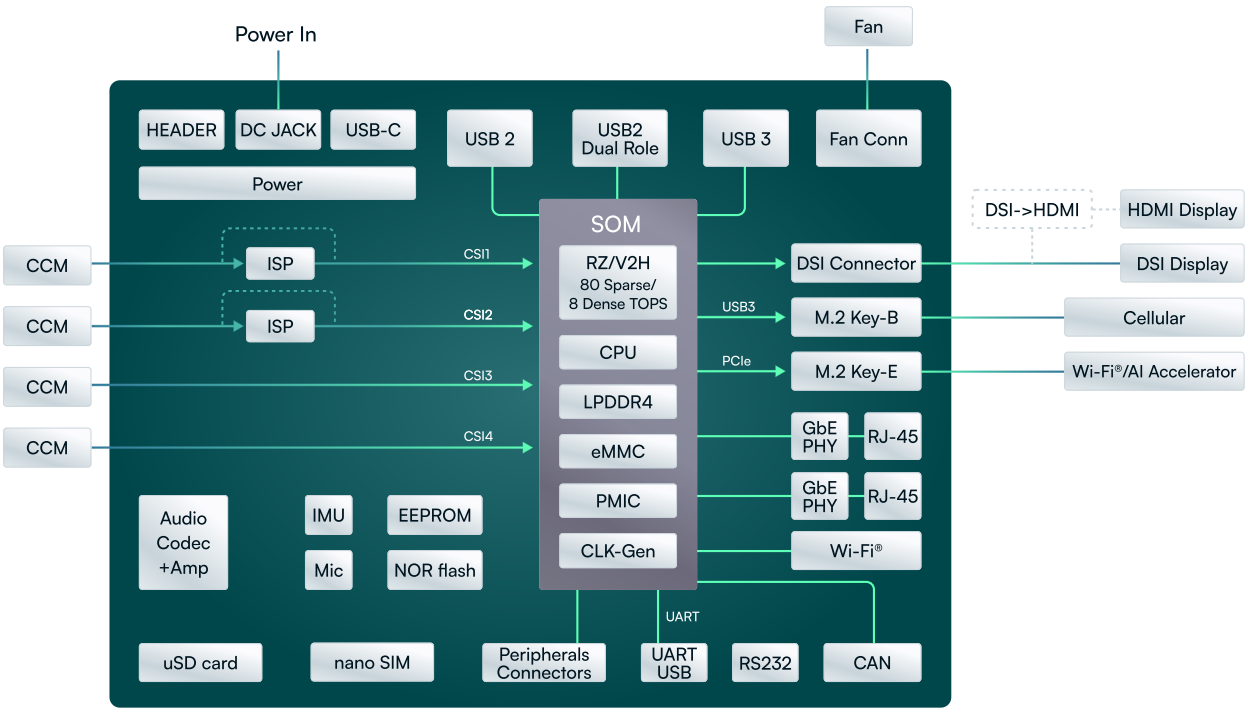

IMDT's V2H Evaluation Kit, based on the IMDT V2H SBC (Single Board Computer), is a high-performance mini-computer designed for a variety of applications in robotics, drones, and smart city projects. The kit offers a user-friendly board with comprehensive onboard connectivity, providing developers with an energy-efficient solution that occupies minimal space.

The V2H EVK can serve as a comprehensive development platform for both evaluation and application development purposes.
The kit offers an excellent demonstration of the V2H SOM and SBC connectivity features and performance.

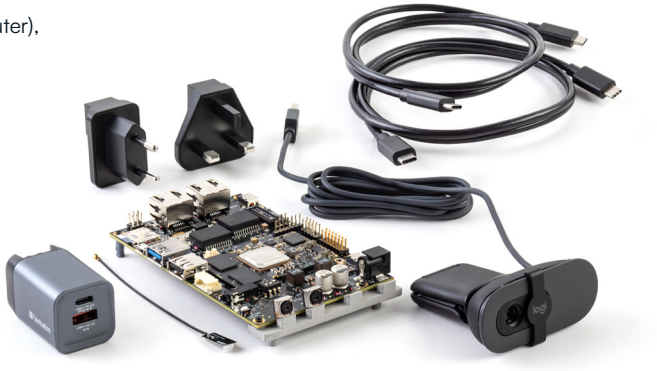

What's in the box

IMDT's V2H SBC

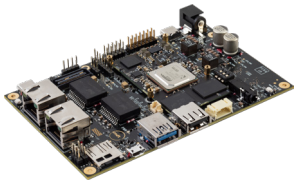

2 x USB cable C - C type
for power supply & Debug

Full HD USB camera

2 x AR1335 mipi cameras

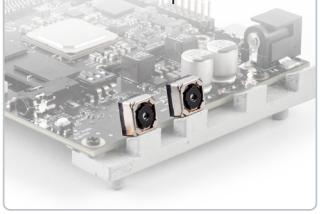

Antenna

USB-C PD 35W Wall Adapter
with foldable US prongs &
replaceable EU and UK plugs

Optional

DSI to HDMI adapter
& HDMI cable

Optional

Display

About IMDT

IMDT Technologies, with headquarters in the UK and Israel, specializes in creating advanced vision and AI-powered products and systems. Leveraging extensive engineering experience in real-time applications, including vision and AI on edge hardware and software, IMDT has excelled in design, development, and manufacturing since its inception in 2017. The company globally addresses complex vision and AI challenges, focusing on partnerships with leading chip manufacturers and delivering turnkey projects in medical, robotics, smart cities, smart homes, and industrial IoT.

For more information contact: sales@imd-tec.com