IMDT QCS6490/5430 SOM

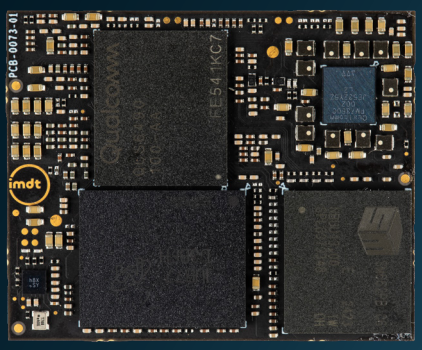

The IMDT QCS6490/5430 SOM, powered by the Qualcomm® QCS6490/5430 processor, is a production-ready module designed for cost-efficient edge AI systems that demand dependable performance and versatility. Ideal for smart retail, industrial automation, smart-city sensing, and AI-driven kiosks, the IMDT QCS6490/5430 SOM combines 8 GB LPDDR5 memory, UFS 3.1 or eMMC storage, and a flexible range of connectivity interfaces. With five 4-lane MIPI-CSI camera inputs supported by the Qualcomm Spectra ISP, it enables advanced vision and analytics workloads in compact, power-sensitive designs. IMDT's modular architecture and long-term availability allow customers to tailor the SOM to their needs while keeping development cost and complexity low.

- Based on Qualcomm QCS6490 processor
- Qualcomm Kryo central processing unit
- Qualcomm Adreno 740 GPU
- 8th-generation Qualcomm AI Engine
- Qualcomm Spectra 18-bit triple ISP
- 5x 4-lane MIPI CSI camera
- Dimensions (WxLxH): 37 x 30 x 2.9mm

made with Qualcomm Technologies

Small form factor

Complete solution including HW&SW

Pin-to-Pin compatible with QCS8550

Advanced Security

Key Features

Qualcomm Kryo central processing unit (CPU)

Qualcomm Adreno 740 GPU

Multiple display interface

8th-generation Qualcomm AI Engine

Qualcomm Spectra 18-bit triple cognitive image signal processor (ISP)

Multiple camera pipelines for high-end imaging

Enterprise-grade security capability - Trust Management Engine and Qualcomm Type-1 Hypervisor

IMDT LTD. 2026 ©

Product Specification

Specification	Description
CPU:	QCS6490/5430-1
Memories:	LPDDR5, 8GByte Storage: UFS 3.1 2-lane HS gear 4 or eMMC 5.1
Connectivity:	1 x USB 3.1 1 x USB 2 1 x PCIe Gen3 1-Lane 1 x PCIe Gen3 2-Lane SDC (4 bits)
Camera:	5x 4-lane MIPI CSI interface for cameras ISP - Qualcomm spectra
Display:	1 x 4-Lane 1 x eDP 1.4 (Optional)

Specification	Description
Audio:	I2S, DMIC, SoundWire
Control I/Fs:	QUPs (SPI, I2C, UART) GPIOs ADCs
Power:	Single power input Integrated PMICs 1.8v,1.2v outputs
Mount:	504-pin BGA, 0.6mm pitch, for SMT assembly
dimensions:	37 x 30 x 2.9mm

Block diagram

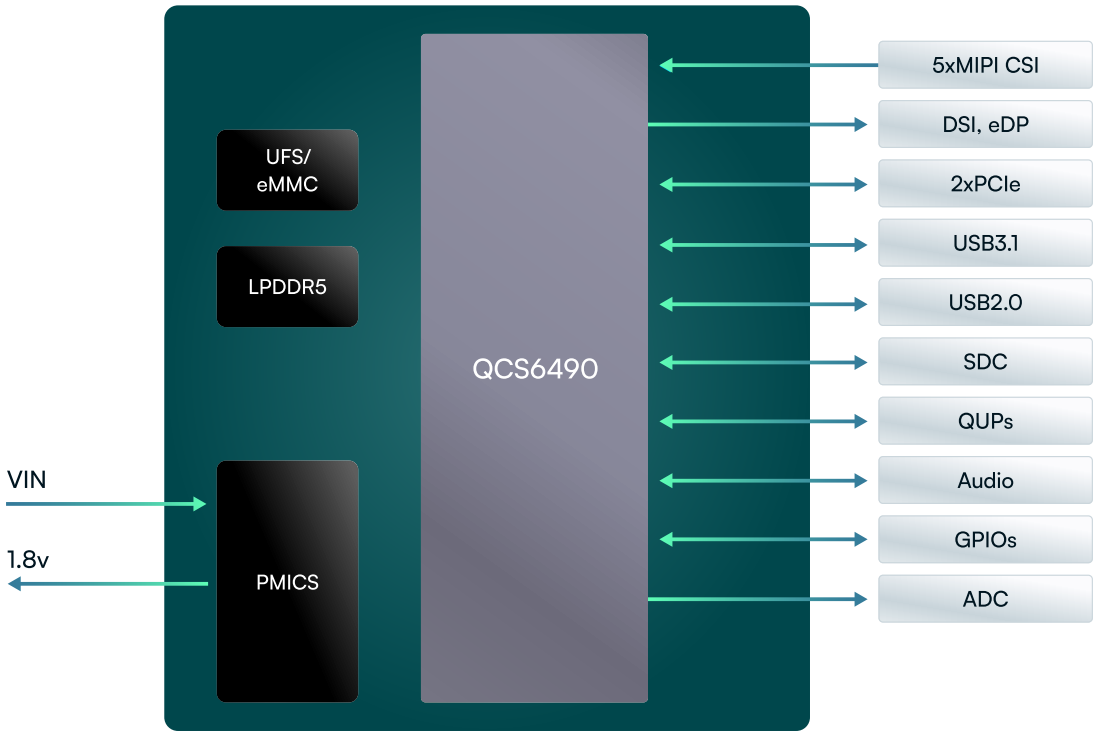

About IMDT

IMDT Technologies, with headquarters in the UK and Israel, specializes in creating advanced vision and AI-powered products and systems. Leveraging extensive engineering experience in real-time applications, including vision and AI on edge hardware and software, IMDT has excelled in design, development, and manufacturing since its inception in 2017. The company globally addresses complex vision and AI challenges, focusing on partnerships with leading chip manufacturers and delivering turnkey projects in medical, robotics, smart cities, smart homes, and industrial IoT.

For more information contact: sales@imd-tec.com