HANGCHA

HANGCHA GROUP CO., LTD.

Factory site: 666 Xiangfu Road,
Hangzhou, Zhejiang, China (311305)

Tel: +86-571-88926735 88926755
Fax: +86-571-88926789 88132890

sales@hcforklift.com
www.hcforklift.com

Follow us on Facebook

Follow us on YouTube

Follow us on WeChat

Available on the iPhone App Store

ANDROID APP ON Google play

Download "Hangcha Forklift" App

ISO14001

ISO14001:2015

ISO9001

ISO9001:2015

HANGCHA trucks conform to the European Safety Requirements.

2026 VERSION 2 /COPYRIGHT 2026/03

HANGCHA GROUP CO., LTD. reserves the right to make any changes without notice concerning colors, equipment, or specifications detailed in this brochure, or to discontinue individual models. The colors of trucks, delivered may differ slightly from those in brochures.

LI-ION TECHNOLOGY

INNOVATIVE LITHIUM-ION

REACH THE SKY

XH SERIES HIGH-VOLTAGE LITHIUM BATTERY EMPTY CONTAINER HANDLER

with capacity of 9,000kg

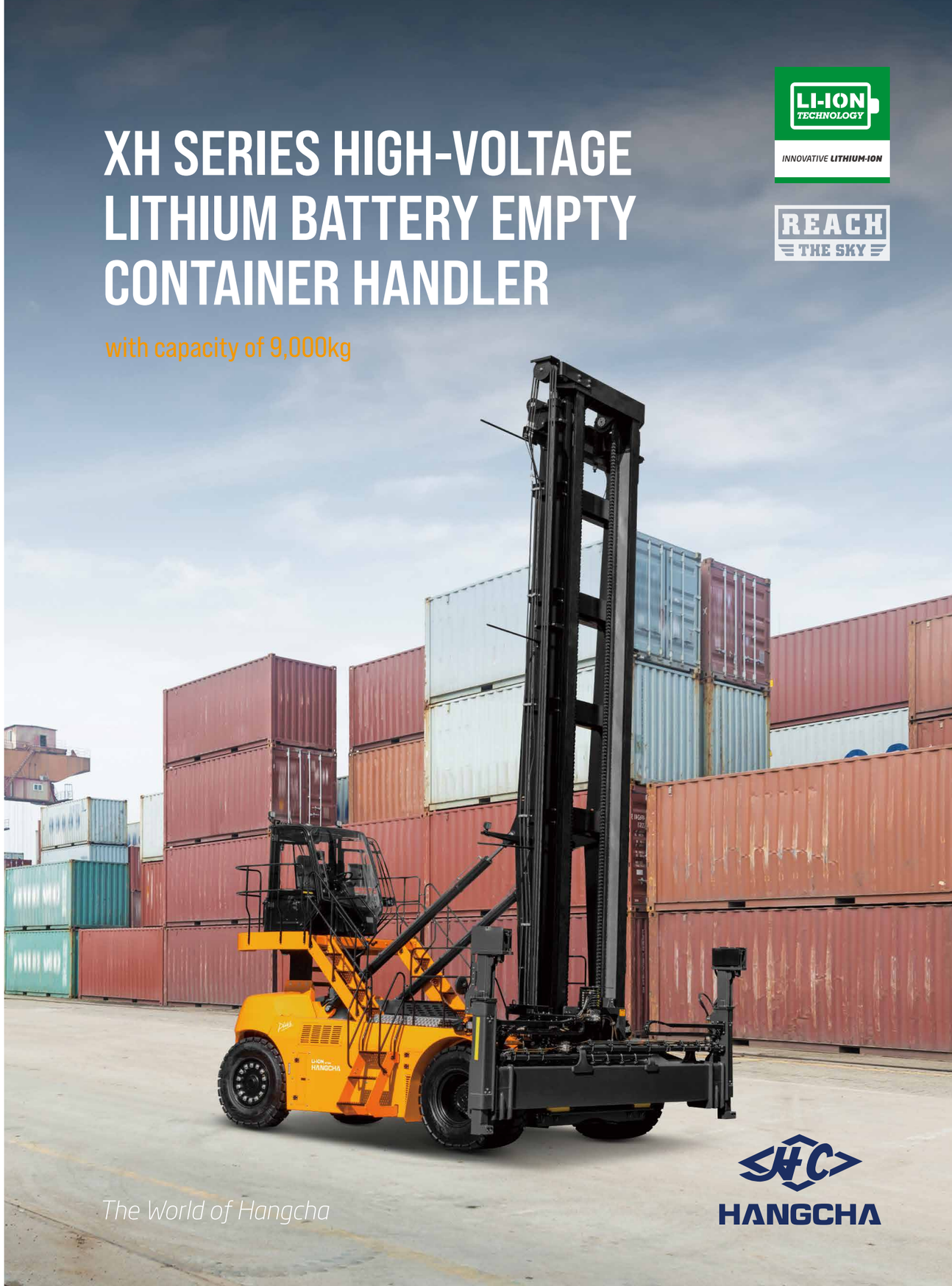

The World of Hangcha

HANGCHA

XH SERIES HIGH-VOLTAGE LITHIUM BATTERY EMPTY CONTAINER HANDLER

Independently developed by Hangcha on the basis of decades of deep understanding of electric products and internal combustion products, XH series high-voltage counterweight lithium battery empty container handlers are a new series of high-voltage lithium battery empty container handlers that first use a new energy vehicle voltage platform and represent a breakthrough over the traditional design concept. With improved efficiency, power, reliability, etc., XH series forklift models have performance and operating condition completely superseding that of the internal combustion forklifts.

VOLTAGE
618 V

SPEED MODELS
3 S/P/E mode (Super/Power/Eco)

CHARGING TIME (20-100%)
1.3Hour

PROTECTION RATE
IP67

VEHICLE WATER RESISTANCE
IPX4

Appearance

/ With the inherited exterior design of X series internal combustion empty container handlers and a smooth and sturdy profile, the whole vehicle is stylish, sturdy and powerful, showing modern industrial aesthetics.

FASTER & MORE EFFICIENCY.

Fast charging makes it possible for the whole vehicle to work continuously, shortening the waiting time and greatly improving efficiency.

Through disruptive battery and fast charging technology, the charging time is greatly shortened.

LI-ION TECHNOLOGY | 6 YEARS WARRANTY

HANGCHA provides Li-ion battery (LiFePO4) with 6 years or 12000 hours warranty.

HIGH-VOLTAGE

423kWh

Battery capacity

EFFICIENT AND DURABLE

Advancement

/ A high-torque permanent magnet synchronous motor provides strong power for the vehicle with performance indicators benchmarked against that of internal combustion forklifts.
/ A 579V high-voltage platform with low system loss and a standard chilled water tank for heavy-duty truck to achieve good heat dissipation.
/ The vehicle has independently developed VCU program along with PDU+MCU+BMS+DC/DC to form a reliable and efficient drive system with flexible function configuration.
/ With motor, electric control and battery adopting liquid-cooling heat dissipation, the forklift can absolutely carry out long-time and high-intensity operations as internal combustion forklifts.

Ultra long battery life

/ A large-capacity lithium battery for the standard configuration can meet the long battery life need.
/ Both the drive and operating systems are efficient and energy-saving vehicle-grade permanent magnet synchronization systems.
/ High-voltage platform, less vehicle current and minimal system heat loss.
/ Braking energy and potential energy recovery effectively prolongs operating time.

Reliable

/ The novel spreader has a higher reliability, a longer service life, a lower failure rate and a lower maintenance cost.

Safety

/ The cover of the vehicle is designed to be sealed to the water resistance level of IPX4.
/ The electrical system has high-voltage interlocking, insulation monitoring and potential balancing functions to offer vehicle-grade safety.
/ Both the battery and junction box have MSD(Manual Service Disconnect) maintenance switches to enable one-click power-down and safer maintenance.
/ Key structural parts have been verified highly reliable by the market for many years while being used by internal combustion forklifts.

All the motor and electronic controls reach the dust and water resistance level of IP67, a high protection level adequate to withstand harsh operating environments.

A turning deceleration function effectively reduces risk of tipping over.

The high-voltage lithium battery is equipped with an automatic fire extinguisher for the standard configuration. The vehicle is equipped with a pipe network automatic fire extinguisher for the standard configuration.

/ The spreader twist-lock equipped with mechanical and electrical protection devices, lifting interruption control, OPS system, travel speed limiting and other functions ensure safe operations.
/ The LED lighting system ensures the brightness of the lighting within the operating range.
/ A visual reversing radar is provided for the standard configuration and other options such as an tire pressure monitoring, overload protection, etc. can be provided.

Fully-suspended all-round vision cab

/ The suspended cabin, easy for maintenmance.
/ With the vehicle frame damper connected and the tight sound and heat insulation design, most vibration and noise are shielded.
/ The largely-curved front and rear windows, all-glass left and right doors and large glass ceiling enable a broad view.
/ An inclinable telescopic steering column and fully-suspended adjustable seat with a high backrest and safety belt, with seat sensing and driving position sensing functions.
/ A high-power cooling and heating air conditioner, two ventilation modes - internal and external circulation, sunshades, speedadjustable wipers and defrosting function make driving more comfortable.

SMART AND CONVENIENT

Maintainability

/ The overturnable cab and electric tipping cylinder make tipping easier and more labor-saving.
/ The wide-opened hood and removable cover better facilitate repair and maintenance of electrical components.

Intelligence

/ An optional intelligent management system is provided to enable intelligent remote monitoring and easier equipment management and logistics management.
/ A vehicle central controller is provided, which has bus architecture, several built-in diagnosis and management functions and a central fault alarm function.

Empty Container Handler comes standard with an ELME spreader. Bromma or HC spreaders are available as options.

Single handling container spreader Vertical Twistlocks.

Improved design with built-in cabling and larger bending radius for hydraulic hose between pocket and end-post.

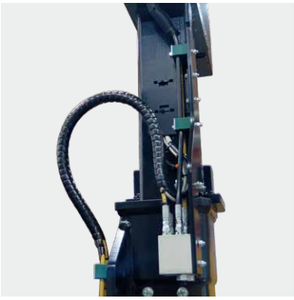

INNOVATION head.

Suitable for:

/ 20' or 40' ISO containers of 8' (2.44 m) width.
/ Approx. 2.45-2.50 m wide "pallet-wide" 20' or 40' containers, with ISO-like 'chamfered' corner castings.
/ With speed limitation for laden/unladen.

Not suitable for:

/ Approx. 2.45 - 2.60 m wide "CPC" containers (Cellular Pallet-wide Containers) with non-ISO corner castings.

TECHNICAL SPECIFICATIONS

Type of lifting system	Two vertical twistlocks
Type of stacking	Normal and block stacking
Spreader weight (TW)	3 600 kgs
Carriage weight (MPS)	1 050 kgs
Lifting capacity (SWL)	9 tonnes
Telescopic positions	20 and 40ft
Telescoping speed, 20-40ft	< 12 sec.*
Telescoping speed, 40-20ft	< 14 sec.*
Sideshift	± 600
Mechanical pile slope (MPS), vertical floating end-posts	At 20ft position: approx. 200 mm At 40ft position: approx. 200 mm
Hydraulics, operating pressure up to	140 bar
Hydraulics, flow	40-60 L/min
Electric - control voltage	24 VDC
Communication	CAN 2.0B
Colour	Black grey RAL 7021

* Calculated speed at 60 L/min

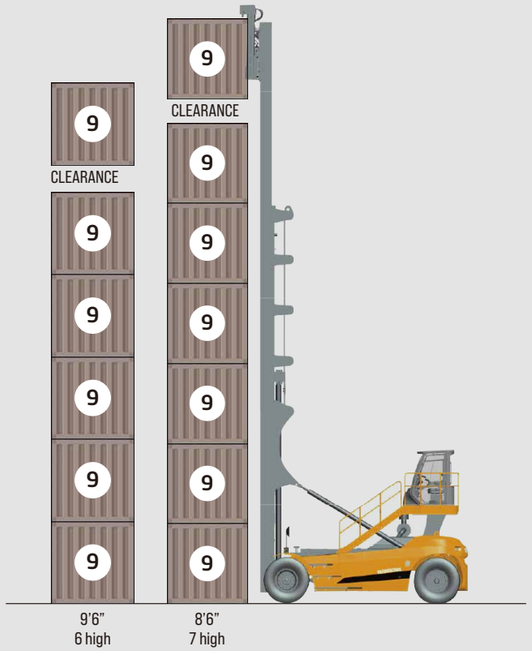

H90EC-7-XHJG

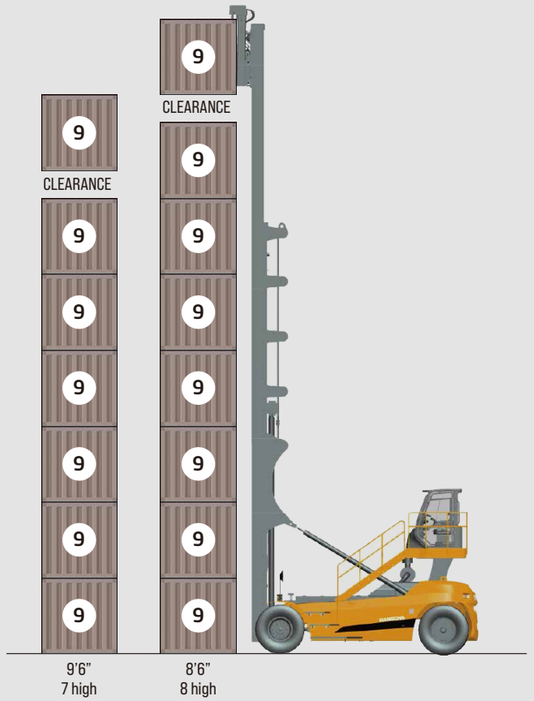

H90EC-8-XHJG

Features

Transmission	Standard	Options
Pneumatic tyre	●	
Solid smooth tire		○
Steering system		
Fully hydraulic power steering	●	
Centralized lubrication system (machine)	●	
Automatic Lubrication System		○
Truck		
Tow pin	●	
Electrostatic discharge chain		○
Rear-view mirror on right & left mudguards	●	
Separate brake oil tank	●	
Operating system		
Integrated joystick	●	
Adjustable steering column	●	
Adjustable armrest	●	
Hydraulic system		
Variable hydraulic pump system	●	
Operation proportion control	●	
Cab		
Cabin	●	
Climate control system (air-conditioning and heater)	●	
Radio	●	
Sunshade	●	
USB charging interface	●	
Clothes hanger hook	●	
Reading light	●	
1 x 24V power supply		○
1 x 12V power supply		○
License plate frame		○
Fan	●	
Lifting components		
Duplex mast	●	
Standard lifting height	●	
Optional lifting height		○
Spreader & twistlock double protection	●	
Emergency descent	●	
Twistlock counter	●	
2 x Spreader twistlock light	●	
Other		
Standard color	●	
User defined colour		○
Fire extinguisher (2kg/4kg)		○
Vehicle toolkit	●	
Mast automatic vertical realignment	●	
Lifting height indicator on display	●	
Dynamic speed Limit depending of lift height(customer defined)		○
Heating pack for the cold region		○
FIMS(Fleet intelligent management system)	●	

Electrical System	Standard	Options
Operator Presense System (OPS) with buzzer	●	
LCD display screen	●	
Main power switch	●	
Emergency power off switch	●	
Maintenance-free 24V lead acid battery	●	
Reverse buzzer	●	
High decible horn	●	
LED lights (entire vehicle)	●	
2 x Working light on front mudguard	●	
2 x Front working light on top of cabin	●	
2 x Rear working light on top of cabin	●	
2 x Working light on both sides of mast	●	
Reverse sensor	●	
Rearview camera system	●	
Rearview camera system with memory		○
Front & rearview camera system		○
Front & rearview camera system with memory		○
4 directions camera system with single display		○
4 directions camera recording system with single display		○
In cabin CCTV		○
Rear blue safety light		○
Front and rear blue safety light		○
Three sided blue danger zone light		○
Overspeed alarm		○
Speed limitation		○
Voice reverse alarm		○
Automatic fire suppression system	●	
Two-way radio		○
Weight indicator in display	●	
Flashing warning light (non rotating) with control switch	●	
Tyre pressure monitoring		○
On-board diagnostics system	●	
Water cooling system for lithium battery	●	
Automatic fire suppression system for lithium battery pack	●	
Manual Service Disconnect (MSD) switch	●	
High voltage interlock	●	
Insulation protection	●	
Power-on self-test	●	
Energy recovery (braking regeneration)		○
Energy recovery (descent regeneration)	●	
Vehicle Control Unit (VCU)	●	
Dual charging ports	●	
Override switch	●	
Turning deceleration		○
Hour meter	●	
Battery charge indicator	●	
Low hydraulic pressure alarm indicator	●	
Hydraulic oil filter warning indicator	●	
Drive mode indicator	●	
Parking brake indicator	●	
Service indicator	●	

XH Series High-voltage Lithium Battery Empty Container Handler Specification

Distinguishing mark	1.1	Manufacturer		HANGCHA GROUP CO.,LTD.			
	1.2	Manufacturer's type designation		H90EC-7-XHJG-N H90EC-7-XHJG-A*	H90EC-8-XHJG-N H90EC-8-XHJG-A*	H90EC-7-XHJG-C	H90EC-8-XHJG-C
	1.3	Drive: electric (battery or mains), diesel, petrol, fuel gas		Electric	Electric	Electric	Electric
	1.4	Operator type: hand, pedestrian, standing, seated, order-picker		Seated	Seated	Seated	Seated
	1.5	Rated capacity/rated load	Q (kg)	9000	9000	9000	9000
	1.6	Stacking height, no. of containers (8'6" / 9'6")		7/6	8/7	7/6	8/7
	1.7	Load centre distance	c (mm)	1220	1220	1220	1220
	1.8	Load distance, centre of drive axle to fork	x (mm)	1250	1250	1250	1250
	1.9	Wheelbase	y (mm)	4550	4550	4750	4750
Weight	2.1	Service Weight	kg	43500	45000	44500	46000
	2.2	Axle loading, laden front/rear	kg	37842/13658	37842/13658	38242/15258	40414/13586
	2.3	Axle loading, unladen front/rear	kg	26535/16965	28350/16650	26255/18245	28060/17940
Tyres, chassis	3.1	Tyres: solid rubber, superelastic, pneumatic, polyurethane		Pneumatic	Pneumatic	Pneumatic	Pneumatic
	3.2	Tyre size, front		14.00-24-28PR	14.00-24-28PR	14.00-24-28PR	14.00-24-28PR
	3.3	Tyre size, rear		14.00-24-28PR	14.00-24-28PR	14.00-24-28PR	14.00-24-28PR
	3.5	Wheels, number front / rear (x = driven wheels)		4x/2	4x/2	4x/2	4x/2
	3.6	Tread, front	b_{10} (mm)	3280	3280	3280	3280
	3.7	Tread, rear	b_{11} (mm)	2300	2300	2300	2300
Dimensions	4.1	Tilt of mast/fork carriage forward/backward	α/β(°)	3/4	3/4	3/4	3/4
	4.2	Height, mast lowered	h_1 (mm)	10868	11828	10868	11828
	4.3	Lift height, min in twist locks	h_2 (mm)	2200	2200	2200	2200
	4.4	Lift height, max in twist locks	h_3 (mm)	18595	21145	18595	21145
	4.5	Height, mast extended	h_4 (mm)	19068	21328	19068	21328
	4.7	Height of overhead cabin	h_6 (mm)	4600	4600	4600	4600
	4.8	Seat height relating to SIP	h_7 (mm)	3500	3500	3500	3500
	4.12	Coupling height	h_{10} (mm)	740	740	740	740
	4.19	Overall length	l_1 (mm)	6850	6850	7050	7050
	4.20	Length to face of forks	l_2 (mm)	-	-	-	-
	4.21	Overall width	b_1 (mm)	4120	4120	4120	4120
	4.22	Spreader sideshift	mm	±600	±600	±600	±600
	4.24	Spreader width,retracted, min	b_3 (mm)	6100	6100	6100	6100
	4.25	Spreader width, extended, max	b_5 (mm)	12240	12240	12240	12240
	4.31	Ground clearance, laden, below mast	m_1 (mm)	270	270	270	270
	4.32	Ground clearance, centre of wheelbase	m_2 (mm)	330	330	330	330
	4.34	Aisle width with(8'6" / 9'6")	A_{st} (mm)	10400/14500	10400/14500	10600/14700	10600/14700
	4.35	Turning radius	W_a (mm)	6000	6000	6270	6270
	4.36	Minimum pivoting point distance	b_{13} (mm)	2085	2085	2085	2085
Performance data	5.1	Travel speed, laden/unladen	km/h	23/24	23/24	23/24	23/24
	5.2	Lift speed, laden/unladen	m/s	0.55/0.60	0.55/0.60	0.55/0.60	0.55/0.60
	5.3	Lowering speed, laden/unladen	m/s	0.50/0.55	0.50/0.55	0.50/0.55	0.50/0.55
	5.5	Drawbar pull, laden	N	120000	120000	120000	120000
	5.7	Gradeability, laden	%	20	20	20	20
	5.10	Service brake		Wet disc brake	Wet disc brake	Wet disc brake	Wet disc brake
		Parking brake		spring applied, hydraulic release multi-disc brake	spring applied, hydraulic release multi-disc brake	spring applied, hydraulic release multi-disc brake	spring applied, hydraulic release multi-disc brake
Electric-engine	6.1	Drive motor rating S2 60 min	kW	143	143	143	143
	6.2	Lift motor rating at S3 15%	kW	89	89	89	89
	6.4	Battery voltage, nominal capacity K5	V/Ah	541/684	541/684	618/684	618/684
	6.5	Battery weight	kg	4330	4330	4730	4730
		Battery dimensions	l/b/h(mm)	2250×675×969	2250×675×969	2450×675×969	2450×675×969
		Max. battery weight	kg	4380	4380	4780	4780
		Min. battery weight	kg	4280	4280	4680	4680
Addition data	10.1	Operating pressure for attachments	bar	180	180	180	180
	10.2	Oil volume for attachments	l/min	120	120	120	120
	10.8	Towing coupling, type DIN 15170		Φ40	Φ40	Φ40	Φ40
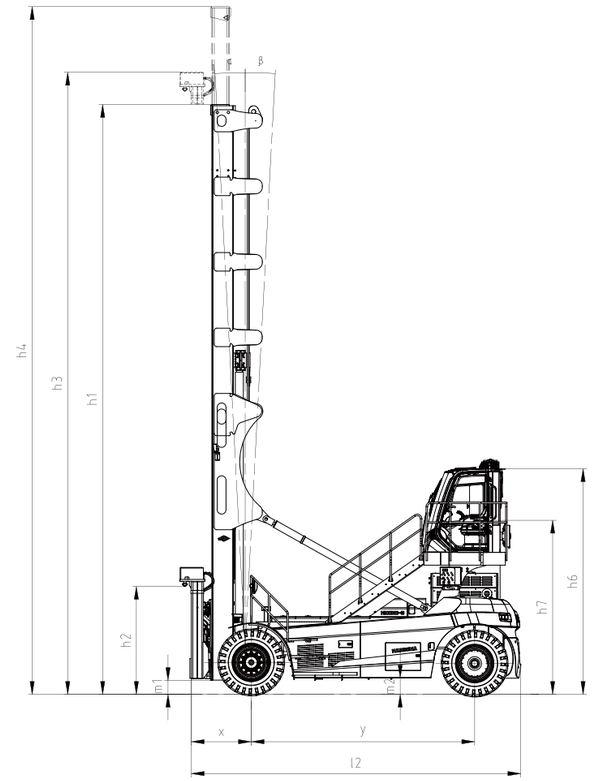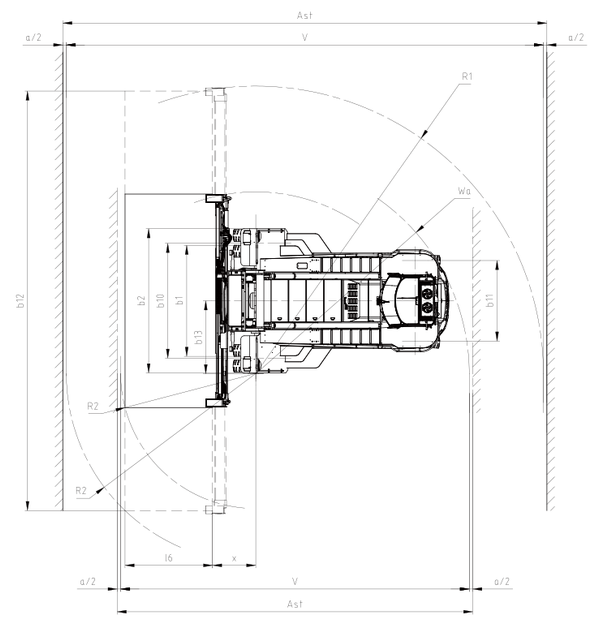
* A: Anti-corrosion protection, the type A is suitable for enviroments with C5-I and C5-M ratings.