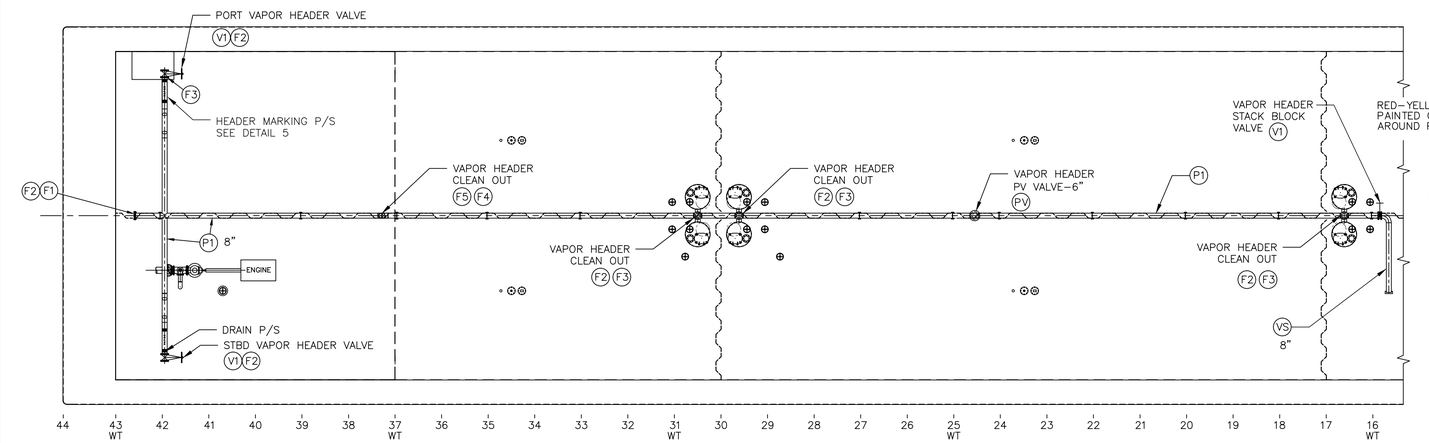

VAPOR SYSTEM PIPING DIAGRAM

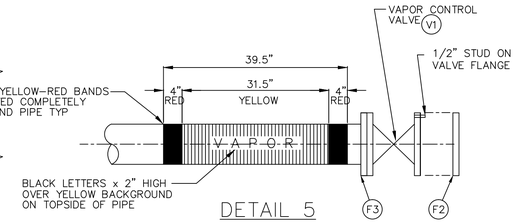

DETAIL 5

VAPOR HEADER MARKING DETAIL
TYPICAL PORT & STARBOARD
SCALE: NONE

REVISIONS

REV	ZONE	DESCRIPTION	DATE	APPROVED

VAPOR SYSTEM GENERAL NOTES:

1. VAPOR PIPING IS CLASS II. MAWP IS 125PSI AND TEMP LESS THAN 150°F. CARGO MAWP IS 100 PSI. CARGO PUMP RELIEF VALVE SET AT 125 PSI.
2. MAXIMUM DESIGN WORKING PRESSURE OF THE CARGO TANKS IS 3 PSI.
3. P/V VALVE IS A 6", ERL "SUPERAC" ALL STAINLESS STEEL. VACUUM RELIEF SET AT 0.5 PSIG VACUUM. PRESSURE SIDE SET AT 1.5 PSIG PRESS. U.S.C.G. APPROVAL NO. 162.017/144/3.
4. ALL PIPING TO BE SCH 40 BLK ERW PIPE UNLESS NOTED OTHERWISE. FIT-UP, WELDING & TESTING SHALL BE TO THE SATISFACTION OF THE OCMI.
5. ALL WELDING TO BE CONTINUOUS OR DOUBLE CONTINUOUS TYPICAL. WELD JOINTS OF PIPING SHALL CONFORM TO 46 CFR 56.30-5 AND 56.30-10 AS APPLICABLE. WELD FITTINGS SHALL BE IAW 46 CFR 56.70 AND PART 57 AS APPLICABLE.

VAPOR SYSTEM BILL OF MATERIALS

MK	QTY	SIZE	DESCRIPTION	MATERIAL	ASTM SPEC	ANSI SPEC
P1	AR	8"	PIPE, SCH 40 BLK ERW	STEEL	A53	B36.10
VS	1	8"	PIPE, .1875" WALL VAPOR STACK W/S.S. FLAME SCREEN, RAIN HOOD & SWIVEL FLANGE	304L ST STL	A312	B36.19M-85
PV	1	6"	HIGH VELOCITY PRESS/VAC VALVE, FLGD, TANKTECH MODEL KLPH-6, PRESS SET @ 1.50PSI, VAC SET @ 0.50PSI	304L ST STL	A312	
V1	3	8"	VALVE, GATE, 150# FLGD, OS&Y, R.S., C.S. BODY, CR13 TRIM, SPACE MODEL #15011C	CARBON STL	A216 GR WCB	B16.5
F1	AR	8"	FLANGE, 150# R.F.S.O.	304L ST STL	A312	B16.5
F2	AR	8"	FLANGE, BLIND, 150# R.F.	FORGED STL	A105	B16.5
F3	AR	8"	FLANGE, 150# R.F.S.O.	FORGED STL	A105	B16.5
F4	1	3"	FLANGE, 150# R.F.S.O.	FORGED STL	A105	B16.5
F5	1	3"	FLANGE, BLIND, 150# R.F.	FORGED STL	A105	B16.5

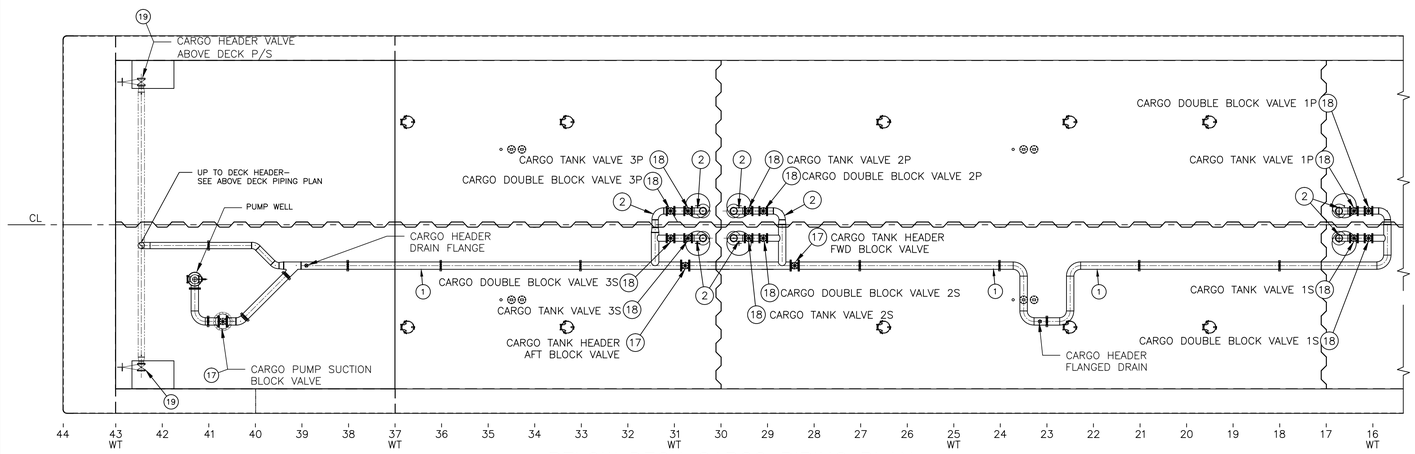

BELOW DECK CARGO PIPING PLAN

LEVEL LOADING OF A SINGLE PRODUCT

DRAFT (FT ABL)	TOTAL P/S CARGO (ST)	TANK 3 P or S (ST)	TANK 2 P or S (ST)	TANK 1 P or S (ST)
2.5	293.94	62.30	42.34	42.34
3.0	529.68	99.07	82.88	82.88
3.5	766.38	135.56	123.82	123.82
4.0	1,003.93	171.63	165.17	165.17
4.5	1,242.31	207.48	206.84	206.84
5.0	1,481.48	242.99	248.87	248.87
5.5	1,721.47	278.20	291.27	291.27
6.0	1,962.26	313.13	334.00	334.00
6.5	2,203.85	347.67	377.13	377.13
7.0	2,446.25	381.97	420.58	420.58
7.5	2,689.45	415.91	464.41	464.41
8.0	2,933.45	449.48	508.62	508.62
8.5	3,178.25	482.84	553.14	553.14
9.0	3,423.85	515.68	598.12	598.12
9.5	3,670.22	548.32	643.40	643.40
10.0	3,917.39	580.74	688.98	688.98
10.5	4,165.34	613.32	734.67	734.67
11.0	4,414.07	646.40	780.32	780.32
11.5	4,663.59	682.86	824.47	824.47

NOTES:

1) TANK LOAD VALUES FOR LEVEL TRIM.
2) FUEL TANK @ 98% FULL.
3) CARGO LIQUID SG = 1.05.
4) VESSEL FLOATING IN FRESH WATER.

CARGO SYSTEM GENERAL NOTES:

1. ALL PIPING SHALL MEET CURRENT USCG REQUIREMENTS FOR CLASS II PIPING SYSTEMS.
2. PIPES PASSING THROUGH WATER/OIL TIGHT BOUNDARIES SHALL BE WELDED DOUBLE CONTINUOUS.
3. CARGO SYSTEM:

   PRESSURE: WORKING 100 PSI
   DESIGN 150 PSI
   TEST 225 PSI
   RELIEF VALVE 125 PSI

4. ALL HATCHES, MANHOLES, STUFFING GLANDS, ETC. ON THE RAISED TRUNK WITH OPENINGS INTO THE CARGO TANKS SHALL BE FITTED WITH TEFLON GASKETS. ALL HATCHES, MANHOLES, ETC. THAT OPEN INTO VOIDS OUTSIDE OF THE CARGO AREA SHALL BE FITTED WITH NEOPRENE GASKETS.
5. CARGO PUMP ENGINE IS A CUMMINS MODEL 6CTA8.3D(M) RATED 270HP @ 1800RPM, IMO, US EPA TIER II COMPLIANT, CLASS I, DIVISION I COMPLIANT.
6. CARGO PUMP IS A RUHRPUMPEN MODEL12LS16GHc, 3 STAGE, RATED FOR 4285 BBLS/HR @ 105 PSI, COMPLETE WITH AN AMARILLO S250 RIGHT ANGLE DRIVE W/1:1 RATIO AND DANA SL1710 x 48" LG. DRIVE SHAFT WITH REMOVABLE GUARD.

CARGO & STRIPPING SYSTEM BILL OF MATERIALS

MK	QTY	SIZE	DESCRIPTION	MATERIAL	ASTM SPEC	ANSI SPEC
1	AR	12"	PIPE, SCH 40 BLK ERW	STEEL	A53 GR B	B36.10
2	AR	10"	PIPE, SCH 40 BLK ERW	STEEL	A53 GR B	B36.10
3	AR	6"	PIPE, SCH 40 BLK ERW	STEEL	A53 GR B	B36.10
4	AR	AR	FLANGE, 150# R.F.S.O.	FORGED STEEL	A105	B16.5
5	AR	AR	RING GASKET, 150#, 1/16" THK, NON-ASBESTOS			
6	2	8"	FLANGE, BLIND, 150# R.F.	304 ST STL	A105	B16.5
7	AR	AR	ELBOW, 45° L.R.B.W., SCH 40 BLK	STEEL	A234	B16.9
8	AR	AR	TEE, SCH 40 BLK B.W.	STEEL	A234	B16.9
9	AR	AR	ELBOW, 90° L.R.B.W., SCH 40 BLK	STEEL	A234	B16.9
10	AR	AR	CONCENTRIC REDUCER, SCH 40 BLK B.W.	STEEL	A234	B16.9
11	AR	AR	HALF COUPLING, 3000# THREADED BLK	FORGED STEEL	A105	B16.11
12	1	1 1/4"	SWING CHECK VALVE, 200# SCRD, 316 S.S. TRIM		A351	B16.10
13	1	10"	CHECK VALVE, WAFER TYPE 150#,316 S.S. TRIM	CARBON STEEL	A216	B16.5
14	AR		PRESSURE GAUGE, 4" DIAL, 1/4"MNPT BOTTOM CONN.			
15	1	6"X4"	RELIEF VALVE SET @ 125PSI, TELEDYNE #26PA10L	CARBON STEEL	A216	B16.5
16	1	1 1/4"	GATE VALVE, 200# SCRD, NRS, 316 S.S. TRIM		A351	B16.10
17	3	12"	GATE VALVE, 150# FLGD, NRS, CR13 TRIM	CARBON STEEL	A216 GR WCB	B16.5
18	12	10"	GATE VALVE, 150# FLGD, NRS, CR13 TRIM	CARBON STEEL	A216 GR WCB	B16.5
19	2	8"	GATE VALVE, 150# FLGD, OS&Y, R.S., CR13 TRIM	CARBON STEEL	A216 GR WCB	B16.5
20	AR	2"	PIPE, SCH 40 SEAMLESS	304 ST STL	A320	B36.19
21	AR	2"	FLANGE, 150# R.F.S.O.	304 ST STL	A312	B16.5
22	2	10"	GATE VALVE, 150# FLGD, OS&Y, R.S., CR13 TRIM	CARBON STEEL	A216 GR WCB	B16.5
23	–	–	NOT USED	–	–	–
24	–	–	NOT USED	–	–	
25	7	2"	GATE VALVE, 150# FLGD, OS&Y, R.S., CR13 TRIM	CARBON STEEL	A216 GR WCB	B16.34
26	–	–	NOT USED	–	–	–
27	AR	2"	FLANGE, 150# R.F. BLIND	304 ST STL	A312	B16.5

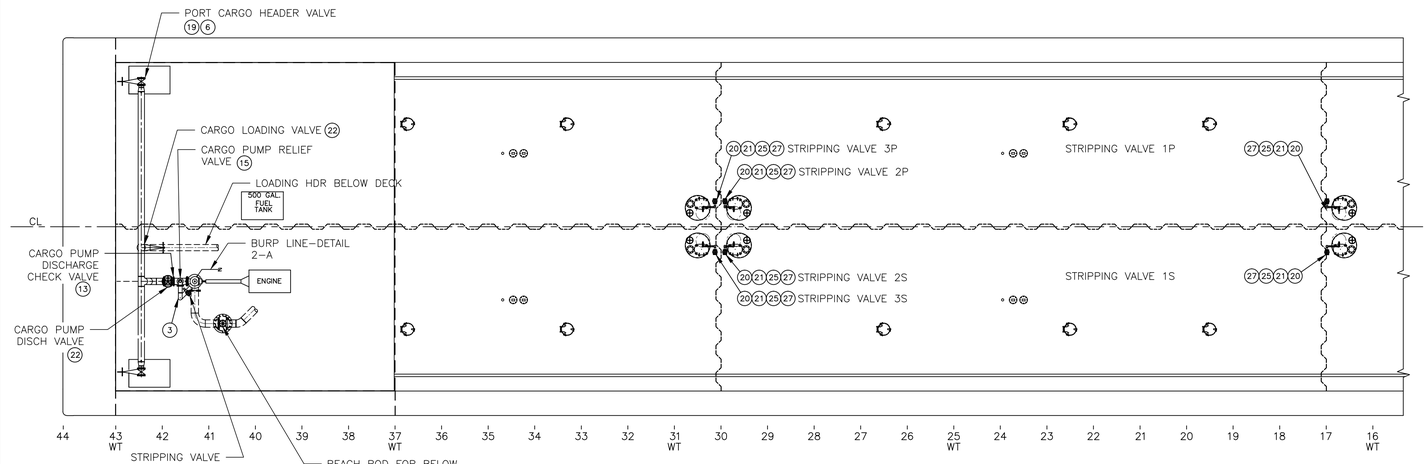

ABOVE DECK CARGO PIPING PLAN

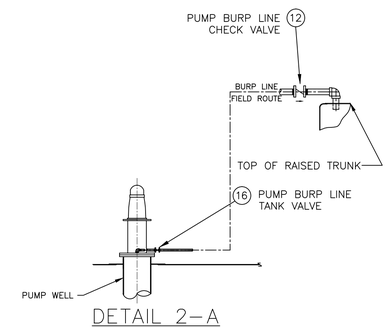

DETAIL 2-A

BURP LINE
NOT TO SCALE

STRIPPING SYSTEM GENERAL NOTES:

1. STRIPPING PIPING IS CLASS II. MAWP IS 100 PSI AND TEMP LESS THAN 150°F.
2. ALL PIPING AND FITTINGS TO BE SCH 40 TYPE 304 STAINLESS STEEL UNLESS NOTED OTHERWISE. PIPING SHALL BE HYDRO-TESTED TO 150 PSI & SHALL BE TO THE SATISFACTION OF THE OCMI.
3. ALL WELDING TO BE CONTINUOUS OR DOUBLE CONTINUOUS TYPICAL. WELD JOINTS OF PIPING SHALL CONFORM TO 46 CFR 56.30-5 AND 56.30-10 AS APPLICABLE. WELD FITTINGS SHALL BE IAW 46 CFR 56.70 AND PART 57 AS APPLICABLE.

CBC395 & CBC396

CONRAD Shipyard, L.L.C.

THIS DOCUMENT AND ALL INFORMATION CONTAINED THEREIN ARE THE PROPERTY OF CONRAD SHIPYARD, L.L.C. A CONRAD INDUSTRIES, INC. COMPANY AND NEITHER RECEIPT NOR POSSESSION THEREOF CONFERS OR TRANSFERS ANY RIGHTS TO REPRODUCE, DISCLOSE, OR USE IN ANY MANNER THIS DOCUMENT, IN WHOLE OR IN PART, OR ANY INFORMATION CONTAINED THEREIN, EXCEPT BY WRITTEN PERMISSION.

297'-6" x 54' x 12'-0" DOUBLE SKIN TANK BARGE

CARGO & VAPOR SYSTEM PIPING DIAGRAM

DRAWN BY:	RLS
CHECKED BY:	RRN
ABS APPROVAL:	
USCG APPROVAL:	

HULL:	SCALE:	DRAWING NO.:	REVISION	SHEET
C-1084/1085	3/32"=1'-0"	M-100	0	1 OF 1
PROJECT:	DATE: 5-28-14			