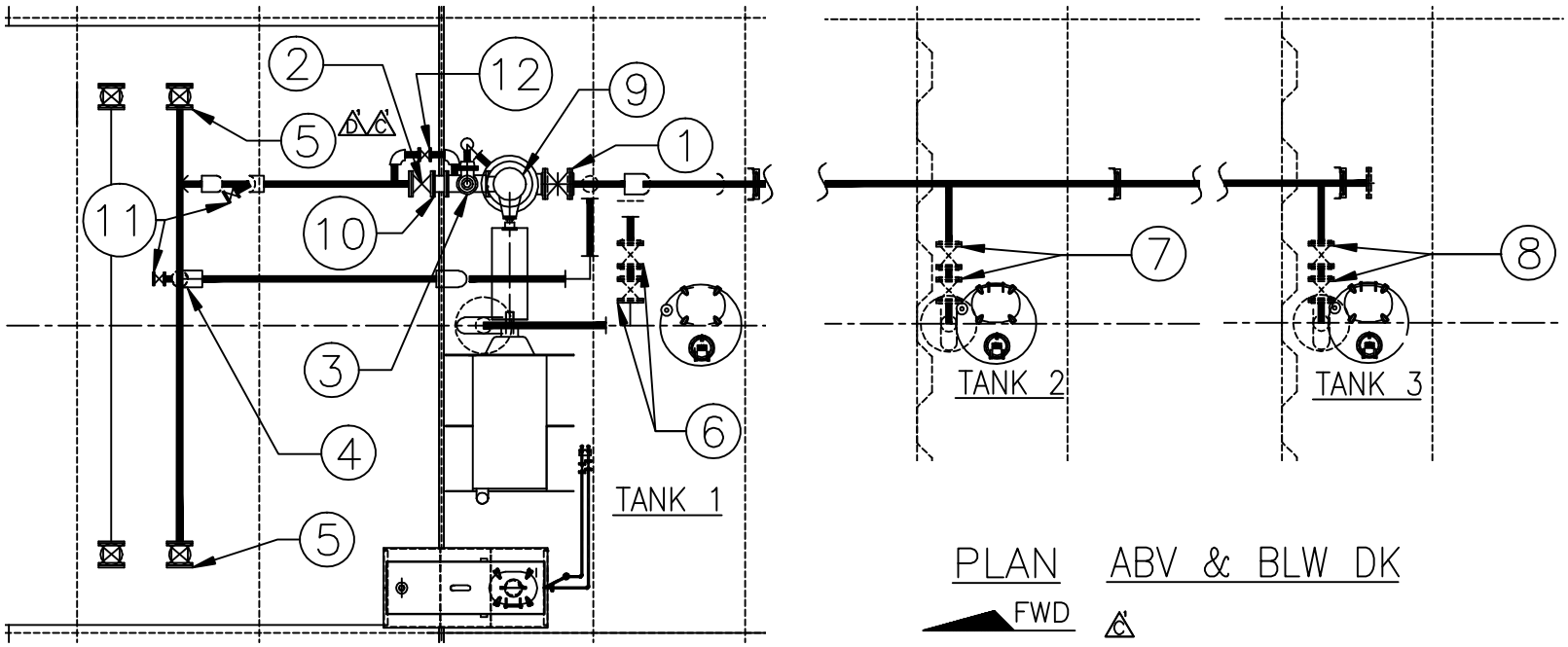

PLAN ABV & BLW DK

FWD C'

A' CAPACITY–SHORT TONS AT VARIOUS DRAFTS				
DRAFT	TOTAL	CT1	CT2	CT3
6'–0"	818.1	264.1	296.8	257.4
6'–3"	871.1	282.6	317.4	271.1
6'–6"	924.0	301.2	338.1	284.7
6'–9"	977.2	319.9	359.0	298.3
7'–0"	1030.2	338.7	379.9	311.7
7'–3"	1083.6	357.6	400.9	325.1
7'–6"	1136.9	376.5	421.9	338.5
7'–9"	1190.2	395.5	443.1	351.7
8'–0"	1243.7	414.6	464.3	364.9
8'–3"	1297.3	433.8	485.6	378.0
8'–6"	1350.9	453.0	506.9	391.0
8'–9"	1404.6	472.3	528.4	404.0
9'–0"	1458.4	491.6	549.9	416.9
9'–3"	1512.2	511.1	571.5	429.7
9'–6"	1566.1	530.6	593.1	442.5
9'–9"	1620.1	550.1	614.8	455.2
10'–0"	1674.1	569.7	636.6	467.9
10'–3"	1728.2	589.4	658.4	480.4
10'–6"	1782.4	609.1	680.3	493.0

CARGO SYSTEM VALVES

1– 10"–MASTER SUCTION VALVE
2– 8"– DISCHARGE VALVE
3– 6"X4"– PRESSURE RELIEF VALVE
4– 8"– LOAD VALVE
5– 8"– PORT & STBD HEADER VALVES
6– 8"– TK 1 FILL / SUCTION VALVE
7– 8"– TK 2 FILL / SUCTION VALVE
8– 8"– TK 3 FILL / SUCTION VALVE
9– PUMP
10– 8"– CHECK VALVE
A' 11– 2"– DRAIN VALVE
A' 12– 2"– BY PASS VALVE

A' MAX. CAPACITY–BBL (FULL)			
11186.30	3510.12	4064.02	3612.26
TOTAL	CT1	CT2	CT3

A' MAX. CAPACITY–CU FT (95%)			
59666.25	18721.98	21676.95	19267.32
TOTAL	CT1	CT2	CT3

NAME	HULL #	NAME	HULL #
~~CBC 1339~~ (D' C')	~~9632~~	CBC 1355	9648
~~CBC 1340~~ (D')	~~9633~~	CBC 1356	9649
~~CBC 1341~~ (D')	~~9634~~	CBC 1357	9650
~~CBC 1342~~ (D')	~~9635~~	CBC 1358	9651
CBC 1343	9636	CBC 1359	9652
CBC 1344	9637	CBC 1360	9685 (F)
CBC 1345	9638	CBC 1361	9686 (F)
~~CBC 1346~~ (E')	~~9639~~	CBC 1362	9687 (F)
~~CBC 1347~~ (E')	~~9640~~	CBC 1363	9688 (F)
CBC 1348	9641	CBC 1364	9689 (F)
CBC 1349	9642	CBC 1365	9690 (F)
CBC 1350	9643	CBC 1366	9691 (F)
CBC 1351	9644	CBC 1367	9692 (F)
CBC 1352	9645	CBC 1368	9693 (F)
CBC 1353	9646	CBC 1369	9694 (F)
CBC 1354	9647		

REV	ITEM	DESCRIPTION	DATE	BY
F	1	[illegible]	2/15/12	SSJ
E	1	[illegible]	6/6/12	SSJ
D	1	[illegible]	2/7/12	SSJ
C	1	[illegible]	10/26/11	SSJ
B	1	ADDED 2" VALVES	9/26/11	SSJ
A	1	ADDED CAPACITY CHARTS	8/8/11	SSJ

REVISIONS

MARINE SOLUTIONS, INC.

CANAL BARGE COMPANY

200'–0"x35'–0"x12'–6" DOUBLE–SKIN TANK BARGE

CARGO PIPE DIAGRAM
(SOUTHWEST SHIPYARD, L.P.)

SCALE: NOT TO SCALE | DATE: 7/29/11 | DWG NO. CP–DIAGRAM
DRAWN BY: SJ | CK'D BY: | APPR. BY:
HULL NO. SEE CHART | CONTRACT NO. 0 | SHT 1 OF 1 | REV. F

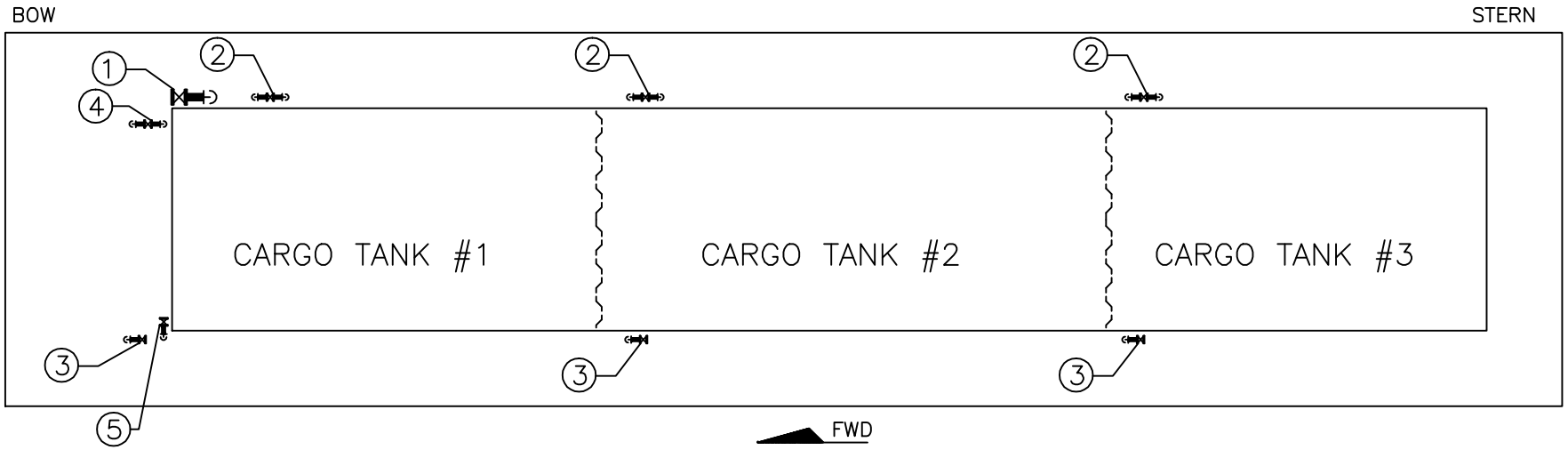

STEAM SYSTEM VALVES

1– 4" STEAM SUPPLY SHORE CONNECTION
2– 2" STEAM SUPPLY VALVE
3– 1" STEAM CONDENSATE RETURN VALVE
4– 2" STEAM SUPPLY VALVE TO DW CAN
5– 1" STEAM CONDENSATE RETURN VALVE FROM DW CAN

HULL #	9645	9646	9647	9648	9649	9650	9651	9652
NAME	CBC 1352	CBC 1353	CBC 1354	CBC 1355	CBC 1356	CBC 1357	CBC 1358	CBC 1359
OF #	1240875	1241346	1240876	1241348	1240877	1241345	1240878	1241347
YR BUILT	2012	2012	2012	2012	2013	2013	2013	2013

HULL #	9685	9686	9687	9688	9689	9690
NAME	CBC 1360	CBC 1361	CBC 1362	CBC 1363	CBC 1364	CBC 1365
OF #	1244698	1244699	1244700	1244701	1244702	1244703
YR BUILT	2013	2013	2013	2013	2013	2013

B

REV	ITEM	DESCRIPTION	DATE	BY
B	1	EXTENDED HULL APPLICABILITY	2/13/13	SJ
A	1	UPDATED HULL APPLICABILITY	1/28/13	SJ

REVISIONS

MARINE SOLUTIONS, INC.

CANAL BARGE COMPANY

200'–0"x35'–0"x12'–6" DOUBLE–SKIN TANK BARGE

STEAM PIPE DIAGRAM

BUILDER– SOUTHWEST SHIPYARD, L.P.

SCALE: NOT TO SCALE | DATE: 4/24/12 | DWG NO. ST–DIAGRAM

DRAWN BY: SJ | CK'D BY: | APPR. BY:

SHT 1 OF 1

HULL NO. SEE CHART | CONTRACT NO. 0 | REV. B

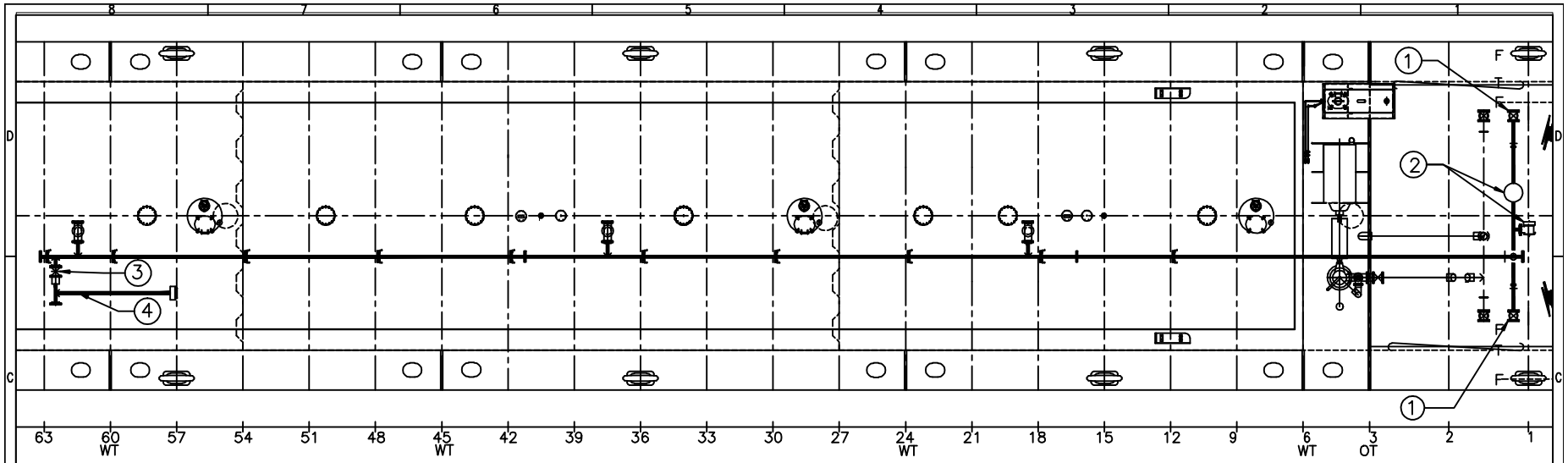

PLAN FWD

VAPOR SYSTEM VALVES

1– 8"–HEADER VALVE
2– 6"– BERGAN PV VALVE– SET @ 1.0# PSI / .5# VACUUM
3– 8" ISOLATION VALVE
4– VENT STACK

CANAL BARGE COMPANY		CANAL BARGE COMPANY	
NAME	HULL #	NAME	HULL #
CBC 1335	9628	CBC 1352	9645
CBC 1336	9629	CBC 1353	9646
CBC 1337	9630	CBC 1354	9647
CBC 1338	9631	CBC 1355	9648
CBC 1339	9632	CBC 1356	9649
CBC 1340	9633	CBC 1357	9650
CBC 1341	9634	CBC 1358	9651
CBC 1342	9635	CBC 1359	9652
CBC 1343	9636	CBC 1360	9685
CBC 1344	9637	CBC 1361	9686
CBC 1345	9638	CBC 1362	9687
CBC 1346	9639	CBC 1363	9688
CBC 1347	9640	CBC 1364	9689
CBC 1348	9641	CBC 1365	9690
CBC 1349	9642	CBC 1366	9691
CBC 1350	9643	CBC 1367	9692
CBC 1351	9644	CBC 1368	9693
		CBC 1369	9694

B

REV	ITEM	DESCRIPTION	DATE	BY
A	1	EXTENDED HULL APPLICABILITY	9/19/13	SJ

REVISIONS

MARINE SOLUTIONS, INC.

CANAL BARGE COMPANY

200'–0"x35'–0"x12'–6" DOUBLE–SKIN TANK BARGE

VAPOR DIAGRAM
(SOUTHWEST SHIPYARD, L.P.)

SCALE: NONE	DATE: 7/20/11		DWG NO.
DRAWN BY: SJ	CK'D BY:	APPR. BY:	VP–DIAGRAM
HULL NO. 0		CONTRACT NO. 0	SHT 1 OF 1
			REV. A