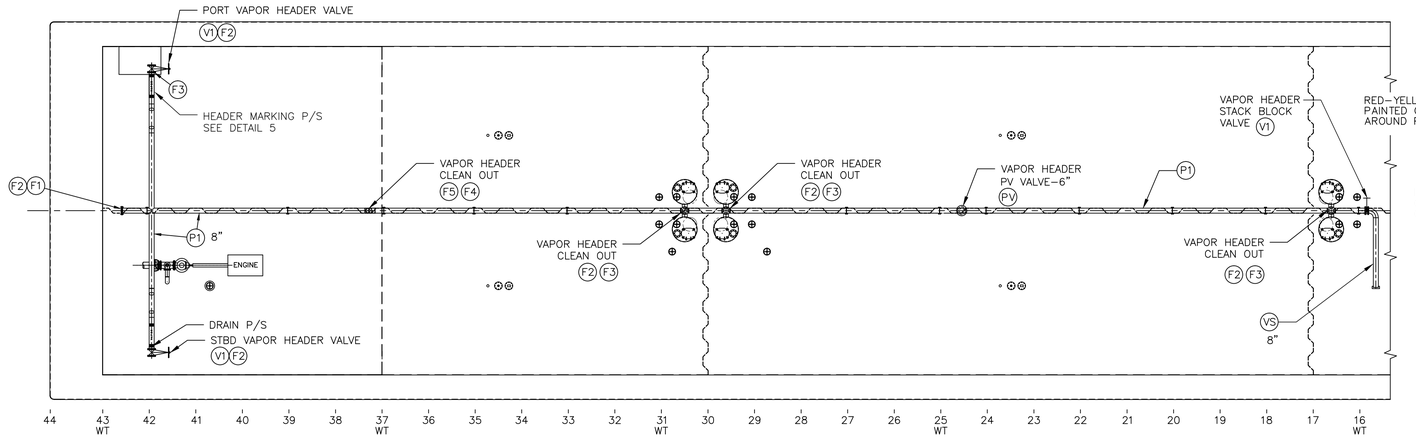


VAPOR SYSTEM PIPING DIAGRAM

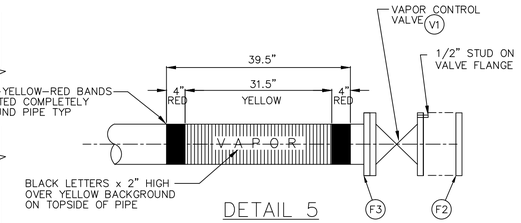


DETAIL 5

VAPOR HEADER MARKING DETAIL
TYPICAL PORT & STARBOARD
SCALE: NONE

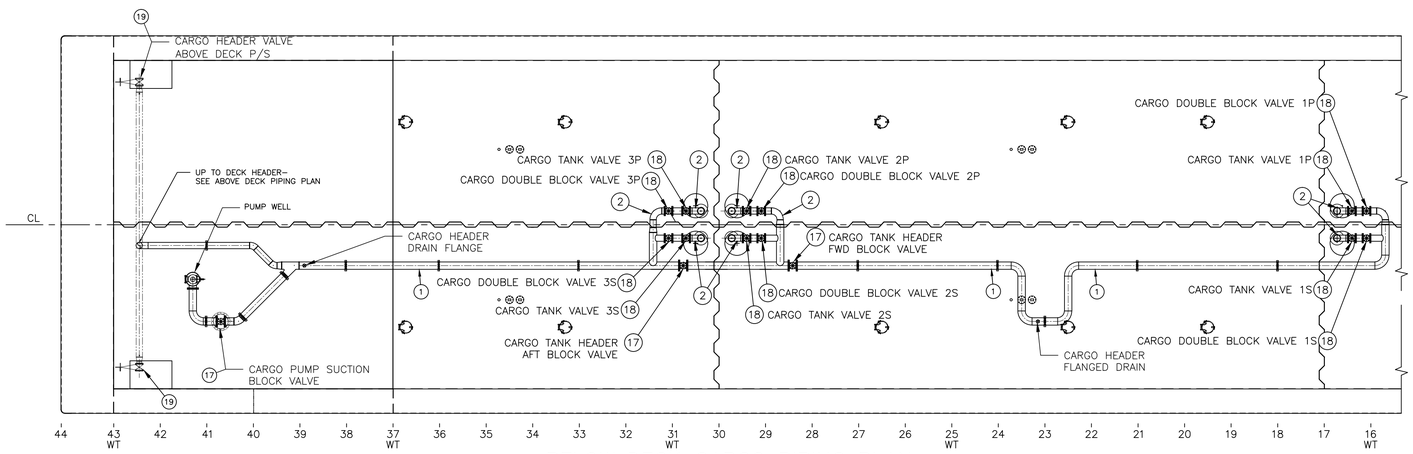


BELOW DECK CARGO PIPING PLAN

LEVEL LOADING OF A SINGLE PRODUCT

| DRAFT (FT ABL) | TOTAL P/S CARGO (ST) | TANK 3 P or S (ST) | TANK 2 P or S (ST) | TANK 1 P or S (ST) |
|---|---|---|---|---|
| 2.5 | 293.94 | 62.30 | 42.34 | 42.34 |
| 3.0 | 529.68 | 99.07 | 82.88 | 82.88 |
| 3.5 | 766.38 | 135.56 | 123.82 | 123.82 |
| 4.0 | 1,003.93 | 171.63 | 165.17 | 165.17 |
| 4.5 | 1,242.31 | 207.48 | 206.84 | 206.84 |
| 5.0 | 1,481.48 | 242.99 | 248.87 | 248.87 |
| 5.5 | 1,721.47 | 278.20 | 291.27 | 291.27 |
| 6.0 | 1,962.26 | 313.13 | 334.00 | 334.00 |
| 6.5 | 2,203.85 | 347.67 | 377.13 | 377.13 |
| 7.0 | 2,446.25 | 381.97 | 420.58 | 420.58 |
| 7.5 | 2,689.45 | 415.91 | 464.41 | 464.41 |
| 8.0 | 2,933.45 | 449.48 | 508.62 | 508.62 |
| 8.5 | 3,178.25 | 482.84 | 553.14 | 553.14 |
| 9.0 | 3,423.85 | 515.68 | 598.12 | 598.12 |
| 9.5 | 3,670.22 | 548.32 | 643.40 | 643.40 |
| 10.0 | 3,917.39 | 580.74 | 688.98 | 688.98 |
| 10.5 | 4,165.34 | 613.32 | 734.67 | 734.67 |
| 11.0 | 4,414.07 | 646.40 | 780.32 | 780.32 |
| 11.5 | 4,663.59 | 682.86 | 824.47 | 824.47 |

NOTES:

1) TANK LOAD VALUES FOR LEVEL TRIM.
2) FUEL TANK @ 98% FULL.
3) CARGO LIQUID SG = 1.05.
4) VESSEL FLOATING IN FRESH WATER.

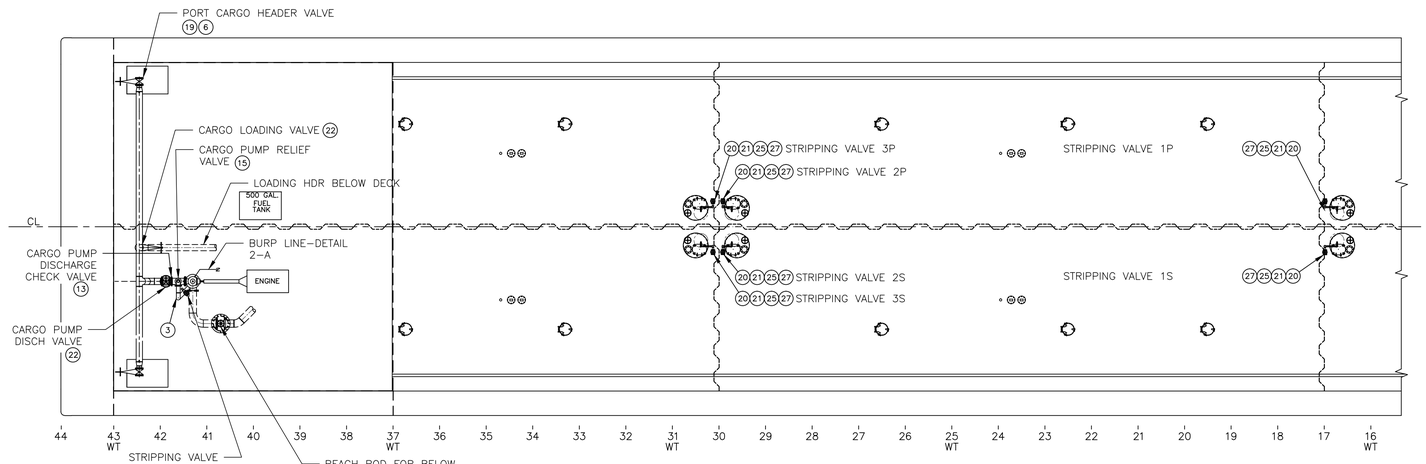


ABOVE DECK CARGO PIPING PLAN

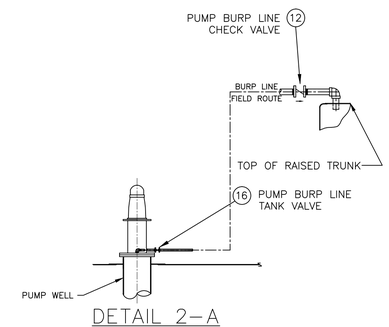


DETAIL 2–A

BURP LINE
NOT TO SCALE

REVISIONS

| REV | ZONE | DESCRIPTION | DATE | APPROVED |
|---|---|---|---|---|
| | | | | |

## VAPOR SYSTEM GENERAL NOTES:

1. VAPOR PIPING IS CLASS II. MAWP IS 125PSI AND TEMP LESS THAN 150°F. CARGO MAWP IS 100 PSI. CARGO PUMP RELIEF VALVE SET AT 125 PSI.
2. MAXIMUM DESIGN WORKING PRESSURE OF THE CARGO TANKS IS 3 PSI.
3. P/V VALVE IS A 6", ERL "SUPERAC" ALL STAINLESS STEEL. VACUUM RELIEF SET AT 0.5 PSIG VACUUM. PRESSURE SIDE SET AT 1.5 PSIG PRESS. U.S.C.G. APPROVAL NO. 162.017/144/3.
4. ALL PIPING TO BE SCH 40 BLK ERW PIPE UNLESS NOTED OTHERWISE. FIT–UP, WELDING & TESTING SHALL BE TO THE SATISFACTION OF THE OCMI.
5. ALL WELDING TO BE CONTINUOUS OR DOUBLE CONTINUOUS TYPICAL. WELD JOINTS OF PIPING SHALL CONFORM TO 46 CFR 56.30–5 AND 56.30–10 AS APPLICABLE. WELD FITTINGS SHALL BE IAW 46 CFR 56.70 AND PART 57 AS APPLICABLE.

## VAPOR SYSTEM BILL OF MATERIALS

| MK | QTY | SIZE | DESCRIPTION | MATERIAL | ASTM SPEC | ANSI SPEC |
|---|---|---|---|---|---|---|
| P1 | AR | 8" | PIPE, SCH 40 BLK ERW | STEEL | A53 | B36.10 |
| VS | 1 | 8" | PIPE, .1875" WALL VAPOR STACK W/S.S. FLAME SCREEN, RAIN HOOD & SWIVEL FLANGE | 304L ST STL | A312 | B36.19M–85 |
| PV | 1 | 6" | HIGH VELOCITY PRESS/VAC VALVE, FLGD, TANKTECH MODEL KLPH–6, PRESS SET @ 1.50PSI, VAC SET @ 0.50PSI | 304L ST STL | A312 | |
| V1 | 3 | 8" | VALVE, GATE, 150# FLGD, OS&Y, R.S., C.S. BODY, CR13 TRIM, SPACE MODEL #15011C | CARBON STL | A216 GR WCB | B16.5 |
| F1 | AR | 8" | FLANGE, 150# R.F.S.O. | 304L ST STL | A312 | B16.5 |
| F2 | AR | 8" | FLANGE, BLIND, 150# R.F. | FORGED STL | A105 | B16.5 |
| F3 | AR | 8" | FLANGE, 150# R.F.S.O. | FORGED STL | A105 | B16.5 |
| F4 | 1 | 3" | FLANGE, 150# R.F.S.O. | FORGED STL | A105 | B16.5 |
| F5 | 1 | 3" | FLANGE, BLIND, 150# R.F. | FORGED STL | A105 | B16.5 |

## CARGO SYSTEM GENERAL NOTES:

1. ALL PIPING SHALL MEET CURRENT USCG REQUIREMENTS FOR CLASS II PIPING SYSTEMS.
2. PIPES PASSING THROUGH WATER/OIL TIGHT BOUNDARIES SHALL BE WELDED DOUBLE CONTINUOUS.
3. CARGO SYSTEM:
   PRESSURE: WORKING 100 PSI
   DESIGN 150 PSI
   TEST 225 PSI
   RELIEF VALVE 125 PSI
4. ALL HATCHES, MANHOLES, STUFFING GLANDS, ETC. ON THE RAISED TRUNK WITH OPENINGS INTO THE CARGO TANKS SHALL BE FITTED WITH TEFLON GASKETS. ALL HATCHES, MANHOLES, ETC. THAT OPEN INTO VOIDS OUTSIDE OF THE CARGO AREA SHALL BE FITTED WITH NEOPRENE GASKETS.
5. CARGO PUMP ENGINE IS A CUMMINS MODEL 6CTA8.3D(M) RATED 270HP @ 1800RPM, IMO, US EPA TIER II COMPLIANT, CLASS I, DIVISION I COMPLIANT.
6. CARGO PUMP IS A RUHRPUMPEN MODEL12LS16GHc, 3 STAGE, RATED FOR 4285 BBLS/HR @ 105 PSI, COMPLETE WITH AN AMARILLO S250 RIGHT ANGLE DRIVE W/1:1 RATIO AND DANA SL1710 x 48" LG. DRIVE SHAFT WITH REMOVABLE GUARD.

## CARGO & STRIPPING SYSTEM BILL OF MATERIALS

| MK | QTY | SIZE | DESCRIPTION | MATERIAL | ASTM SPEC | ANSI SPEC |
|---|---|---|---|---|---|---|
| 1 | AR | 12" | PIPE, SCH 40 BLK ERW | STEEL | A53 GR B | B36.10 |
| 2 | AR | 10" | PIPE, SCH 40 BLK ERW | STEEL | A53 GR B | B36.10 |
| 3 | AR | 6" | PIPE, SCH 40 BLK ERW | STEEL | A53 GR B | B36.10 |
| 4 | AR | AR | FLANGE, 150# R.F.S.O. | FORGED STEEL | A105 | B16.5 |
| 5 | AR | AR | RING GASKET, 150#, 1/16" THK, NON–ASBESTOS | | | |
| 6 | 2 | 8" | FLANGE, BLIND, 150# R.F. | 304 ST STL | A105 | B16.5 |
| 7 | AR | AR | ELBOW, 45° L.R.B.W., SCH 40 BLK | STEEL | A234 | B16.9 |
| 8 | AR | AR | TEE, SCH 40 BLK B.W. | STEEL | A234 | B16.9 |
| 9 | AR | AR | ELBOW, 90° L.R.B.W., SCH 40 BLK | STEEL | A234 | B16.9 |
| 10 | AR | AR | CONCENTRIC REDUCER, SCH 40 BLK B.W. | STEEL | A234 | B16.9 |
| 11 | AR | AR | HALF COUPLING, 3000# THREADED BLK | FORGED STEEL | A105 | B16.11 |
| 12 | 1 | 1 1/4" | SWING CHECK VALVE, 200# SCRD, 316 S.S. TRIM | | A351 | B16.10 |
| 13 | 1 | 10" | CHECK VALVE, WAFER TYPE 150#,316 S.S. TRIM | CARBON STEEL | A216 | B16.5 |
| 14 | AR | | PRESSURE GAUGE, 4" DIAL, 1/4"MNPT BOTTOM CONN. | | | |
| 15 | 1 | 6"X4" | RELIEF VALVE SET @ 125PSI, TELEDYNE #26PA10L | CARBON STEEL | A216 | B16.5 |
| 16 | 1 | 1 1/4" | GATE VALVE, 200# SCRD, NRS, 316 S.S. TRIM | | A351 | B16.10 |
| 17 | 3 | 12" | GATE VALVE, 150# FLGD, NRS, CR13 TRIM | CARBON STEEL | A216 GR WCB | B16.5 |
| 18 | 12 | 10" | GATE VALVE, 150# FLGD, NRS, CR13 TRIM | CARBON STEEL | A216 GR WCB | B16.5 |
| 19 | 2 | 8" | GATE VALVE, 150# FLGD, OS&Y, R.S., CR13 TRIM | CARBON STEEL | A216 GR WCB | B16.5 |
| 20 | AR | 2" | PIPE, SCH 40 SEAMLESS | 304 ST STL | A320 | B36.19 |
| 21 | AR | 2" | FLANGE, 150# R.F.S.O. | 304 ST STL | A312 | B16.5 |
| 22 | 2 | 10" | GATE VALVE, 150# FLGD, OS&Y, R.S., CR13 TRIM | CARBON STEEL | A216 GR WCB | B16.5 |
| 23 | – | – | NOT USED | – | – | – |
| 24 | – | – | NOT USED | – | – | |
| 25 | 7 | 2" | GATE VALVE, 150# FLGD, OS&Y, R.S., CR13 TRIM | CARBON STEEL | A216 GR WCB | B16.34 |
| 26 | – | – | NOT USED | – | – | – |
| 27 | AR | 2" | FLANGE, 150# R.F. BLIND | 304 ST STL | A312 | B16.5 |

## STRIPPING SYSTEM GENERAL NOTES:

1. STRIPPING PIPING IS CLASS II. MAWP IS 100 PSI AND TEMP LESS THAN 150°F.
2. ALL PIPING AND FITTINGS TO BE SCH 40 TYPE 304 STAINLESS STEEL UNLESS NOTED OTHERWISE. PIPING SHALL BE HYDRO–TESTED TO 150 PSI & SHALL BE TO THE SATISFACTION OF THE OCMI.
3. ALL WELDING TO BE CONTINUOUS OR DOUBLE CONTINUOUS TYPICAL. WELD JOINTS OF PIPING SHALL CONFORM TO 46 CFR 56.30–5 AND 56.30–10 AS APPLICABLE. WELD FITTINGS SHALL BE IAW 46 CFR 56.70 AND PART 57 AS APPLICABLE.

CONRAD Shipyard, L.L.C.

THIS DOCUMENT AND ALL INFORMATION CONTAINED THEREIN ARE THE PROPERTY OF
CONRAD SHIPYARD, L.L.C.
A CONRAD INDUSTRIES, INC. COMPANY
AND NEITHER RECEIPT NOR POSSESSION THEREOF CONFERS OR TRANSFERS ANY RIGHTS TO REPRODUCE, DISCLOSE, OR USE IN ANY MANNER THIS DOCUMENT, IN WHOLE OR IN PART, OR ANY INFORMATION CONTAINED THEREIN, EXCEPT BY WRITTEN PERMISSION.

297'–6" x 54' x 12'–0" DOUBLE SKIN TANK BARGE

# CARGO & VAPOR SYSTEM PIPING DIAGRAM

| | |
|---|---|
| DRAWN BY: | RLS |
| CHECKED BY: | RRN |
| ABS APPROVAL: | |
| USCG APPROVAL: | |

| HULL: | SCALE: | DRAWING NO.: | REVISION | SHEET |
|---|---|---|---|---|
| C–1084/1085 | 3/32"=1'–0" | M–100 | 0 | 1 OF 1 |
| PROJECT: | DATE: 5–28–14 | | | |