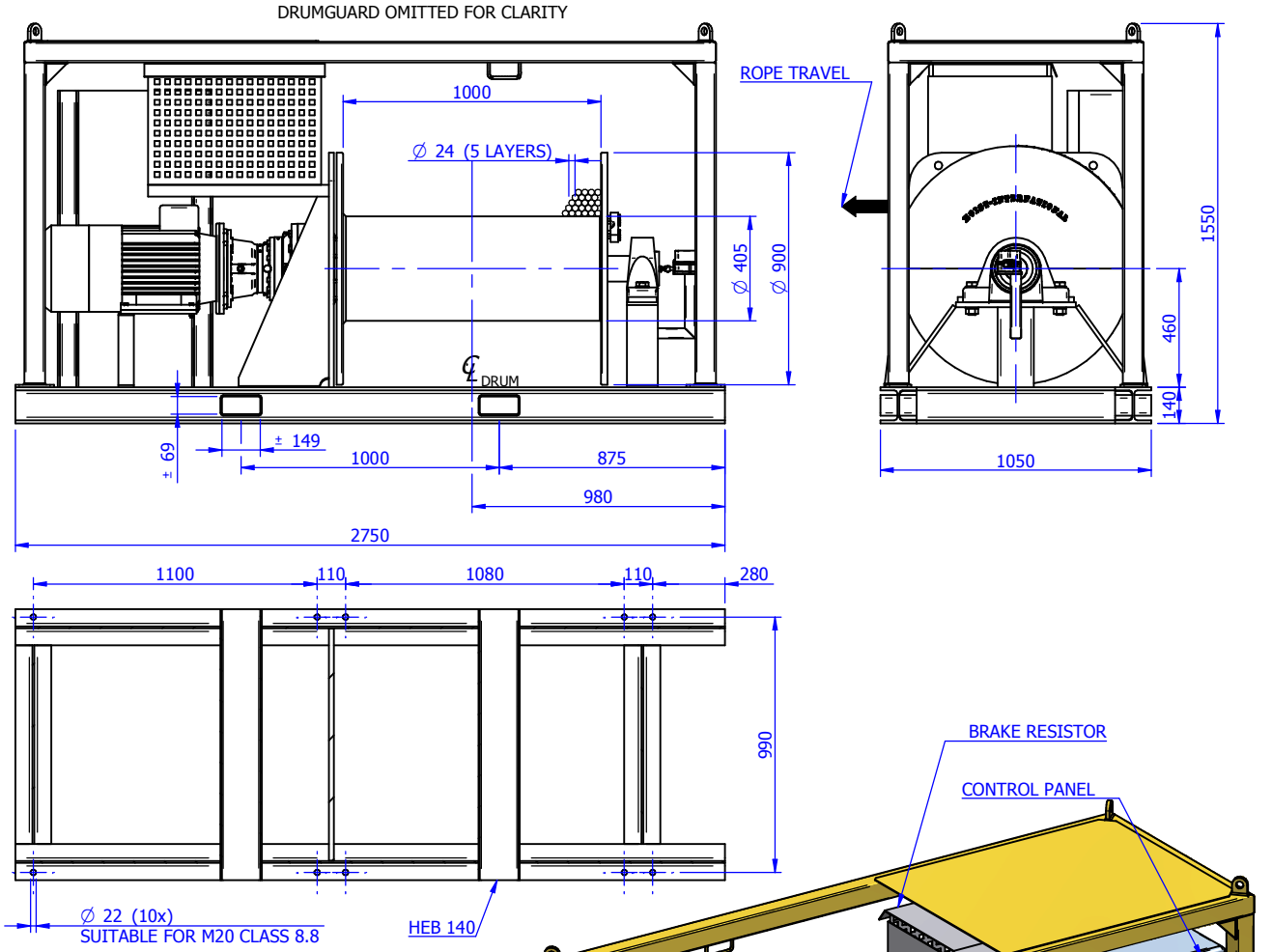

FOOTPRINT TOP VIEW

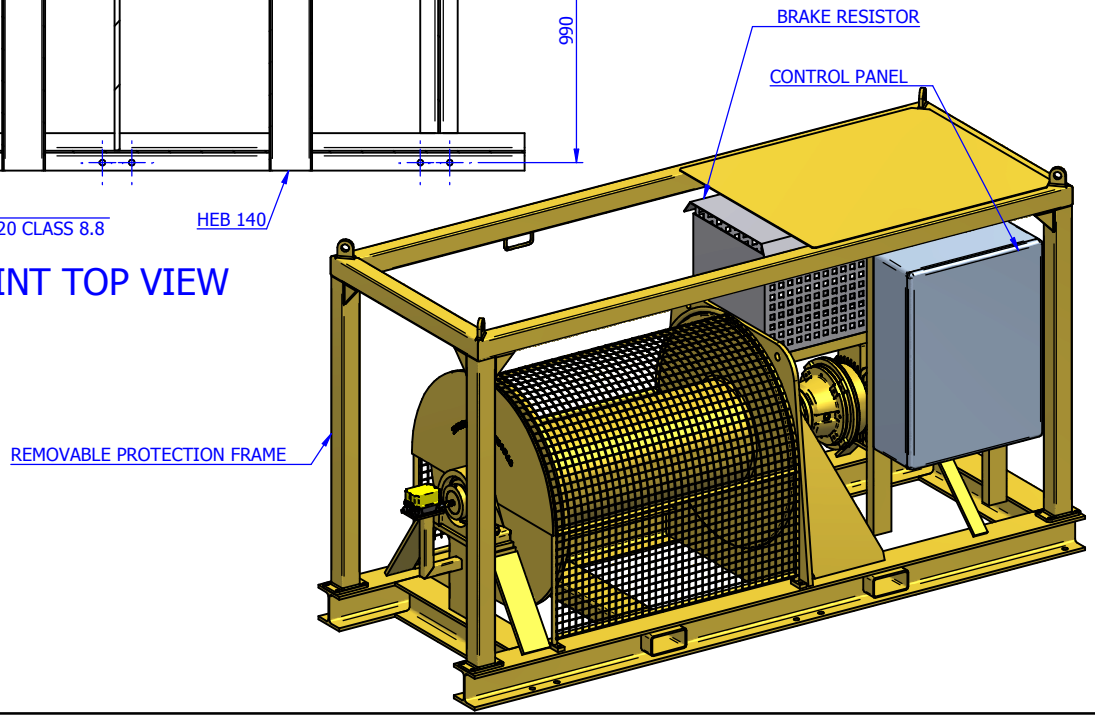

REVISION	DRAWN BY	DESCRIPTION	DATE	APPROVED ENGINEER
1.2	aste	FOR INFORMATION	15-6-2012	

GENERAL NOTES:

1. THIS DRAWING IS SUBJECT TO FURTHER ENGINEERING DEVELOPMENT.

TECHNICAL DATA:

WINCH	ISO-FEM CLASS	T3-L3-M4	
	OPERATING TEMP.	0 to +40	°C.
	DUTY	LIFTING	
	RATED CAPACITY, ON THE TOP LAYER	6000	KG
	MAX. CAPACITY, ON THE 1ST LAYER	8685	KG
	RATED SPEED, ON THE 1ST LAYER	9	m/min
	MAX. SPEED, ON THE TOP LAYER	13	m/min
	MASS WINCH EXCL. CABLE	± 1750	KG.
CABLE REQ.	∅	24	mm
	MAXIMUM NUMBER OF LAYERS	5	
	LENGTH	310	m
	MINIMUM BRAKE LOAD (M.B.L.)	402	kN
DRUM	BARREL ∅	405	mm
	LENGTH	1000	mm
	FLANGE ∅	900	mm
	GROOVE	NONE	
	PITCH		mm
	RADIUS		mm
	DEPTH		mm
	BRAKE FACTOR		x W.L.L.
MOTOR	TYPE	ELECTRICAL BRAKE MOTOR	
	PROTECTION CLASS	IP 54	
	POWER	15	kW, S1
	VOLTAGE	400	VAC
	FREQUENCY	50	Hz
	BRAKE FACTOR	1,5	x W.L.L.
GEARBOX	TYPE	PLANETARY GEARBOX	
	GEAR	HIGH QUALITY	
EXTRA(S)		DRUMGUARD, PROTECTION FRAME CONTROL PANEL SPINDLE LIMIT SWITCH	

PROJECT CLIENT NAME:

HOIST INTERNATIONAL B.V

DRAWING DESCRIPTION:

SB 309 EDL
GENERAL ARRANGEMENT WINCH
DATASHEET

CLIENT REFERENCE No.: 48003375 - 48003373

EMCÉ Winches | Stokvis Group

© EMCÉ WINCHES, 2010
THIS DOCUMENT CONTAINS CONFIDENTIAL AND PROPRIETARY INFORMATION WHICH, UNLESS OTHERWISE EXPRESSLY AGREED TO IN WRITING BY EMCÉ, REMAINS THE SOLE PROPERTY OF EMCÉ, AND MAY NOT BE DISCLOSED, COPIED, REDISTRIBUTED, RETRANSMITTED, PUBLISHED OR USED TO CREATE DERIVATIVE WORKS.

PROJECTIE:	DRAWN BY:	SCALE:	SIZE:	REVISION:
THIRD PROJECTION	A. Stevens	-	A3	1.2

DATE DRAWN:	ORDER NUMBER:	DRAWING NUMBER:	SHEET:
26-4-2012	1000954	SB0.0309.00.031	1

EMCÉ WINCHES - 's-Gravendamseweg 53b - 2215 TC - Voorhout - The Netherlands - Tel: +31 (0)252 21 40 80 - Fax: +31(0)252 22 01 07 - sales@emce.com