PATRIMONIAL BENCH | Industrial Models Nº78625 and 78626

with and without backrest

Technology:
Precast concrete with color aggregate.
Available colors:
Off-white.
Finishing:
Clear liquid coating.

Approximate weight: 410 kg (with backrest), 250 kg (without backrest)

THE CLIENT SHOULD FORESEE AND PROVIDE THE UNLOADING AND HANDLING MEANS.

INSTALLATION AND FIXING NOT INCLUDED.

THIS SPECT DATA SHEET MUST BE ATTACHED TO THE INSTALLATION AND MAINTENANCE SHEETS, TO BE PROVIDED BY ESTUDIO CABEZA.

REINFORCED CONCRETE BASE
In situ concrete foundation
not provided by Estudio Cabeza.

Fixing details and steel reinforcing bar

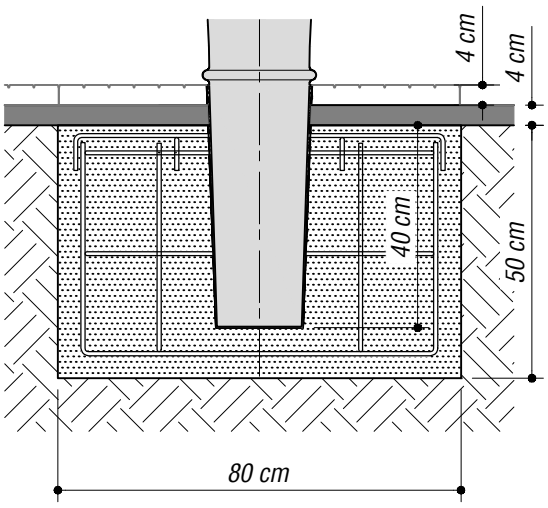

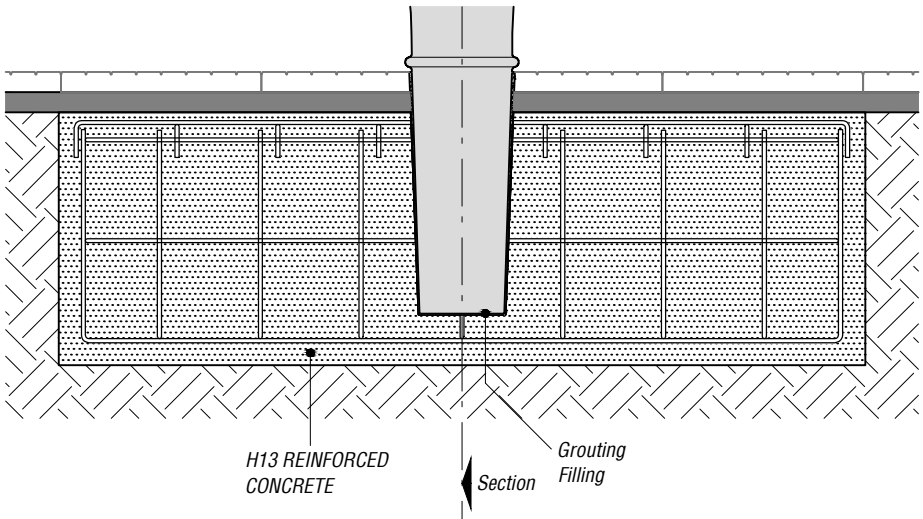

CONICAL CAVITY
Centered in concrete base

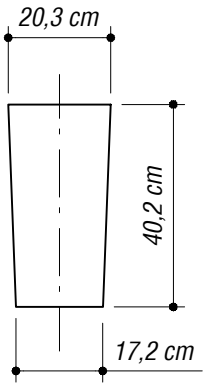

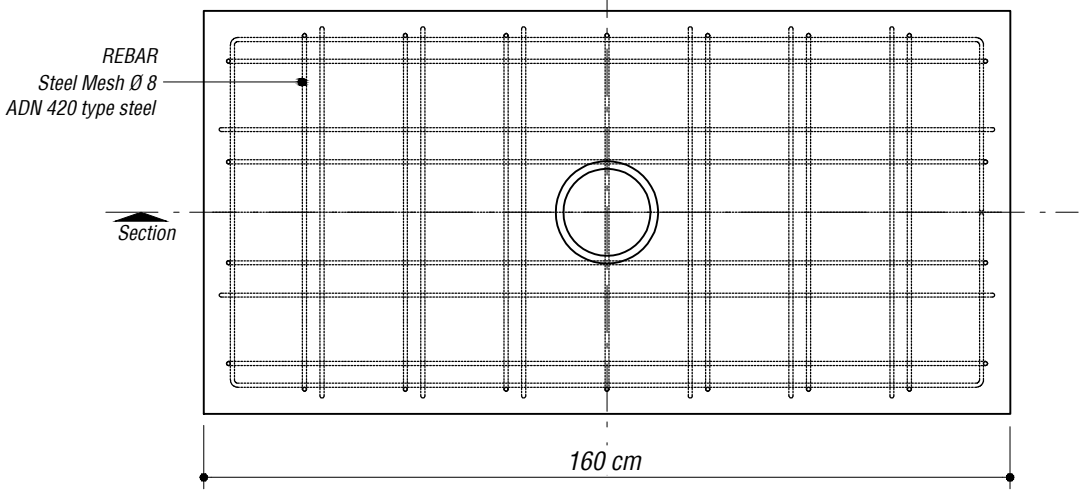

ESTUDIO CABEZA
Pje. Soria 5020
C1414BLD
Buenos Aires
Argentina
Tel: 54-11-4833-2002
Fax: 54-11-4833-2002
info@estudiocabeza.com
www.estudiocabeza.com

ALL RIGHTS RESERVED TO ESTUDIO CABEZA®