NO#	PK607-PD0705-03-CA	Plaque PE sur vé du chassis	REVISION		PROCESS	Qty
1	PK607-PD0707-03-CA	TOLE SUPPORT REHAUSSE PLASTRON	C	50W THK 0.375	LASER SHEET , BENT SHEET	1
2	PK607-PD0703-03-CA	VE BUTEE DE BRAS	A	50W	BENT SHEET	1
3	PK607-PD0708-03-CA	RENFORT REHAUSSE PLASTRON	B	50W THK 0.375	BENT SHEET	1
4	PK607-PD0120-03	Plaque PE sur vé du chassis	0	PEHD 1000	PURCHASED	2
5	SCHCS M8X20X20-CLSS12.9	SOCKET HEAD COUNTERSUNK			PURCHASED	4

REVISIONS

ZONE	REV.	DESCRIPTION	DATE	APPROVED
		INITIAL RELEASE FOR NA FABRICATION	5/2/2025	JPP
D5	A	REVISED PARTS TO IMPROVE ASSEMBLY ADJUSTABILITY	2026-04-23	
D5	B	REVISED PART FOLLOWING CAMERA BRACKET REMOVAL REMOVAL OF THE CAMERA BRACKET (PK607-PD0705-03-CA) WELDING DRAWING CORRECTED	2026-06-29	
B2, B7, B8, D5	C	OPTIMIZED CLEARANCE , REVISED ITEM 2 , WAS, SCHCS 5/16-18X5/8X5/8-STM835 IS, SCHS M8X20X20-CLASS12.9	9/14/2026	

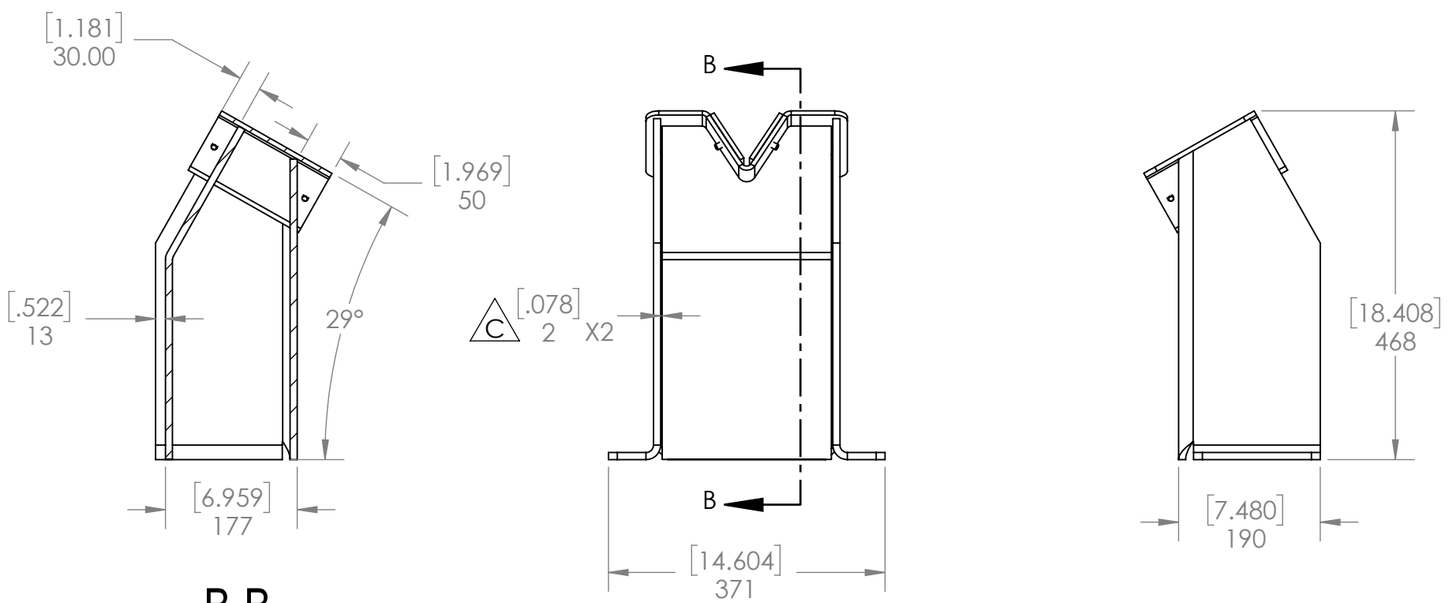

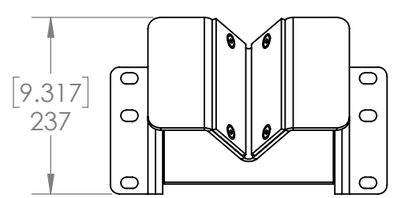

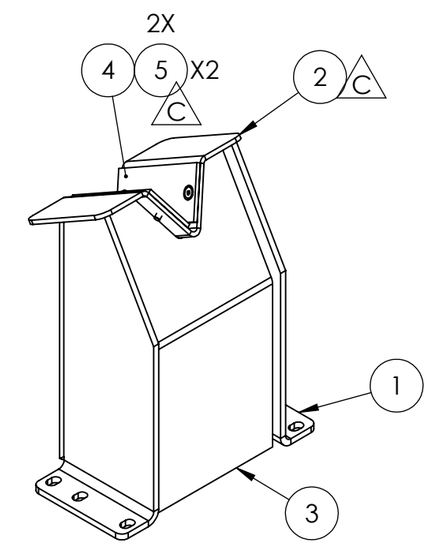

TOLERANCES UNLESS OTHERWISE SPECIFIED					
IMPERIAL X° : ± 0.5° X/X : ± 1/8" X,X : ± 1/16" X,XX : ± 0.01" X,XXX : ± 0.005"	METRIC X° : ± 0.5° X : ± 3mm X,X : ± 1.5mm X,XX : ± 0.25mm X,XXX : ± 0.1mm	PACKMAT EQUIPMENT	PART NO: PK607-PE07-03-CA	REV: C	
			DESCRIPTION: REHAUSSE PLASTRON		
		DRAWN BY: JPP	DATE: 2025/05/02		
		CHECKED BY:	DATE:	MATERIAL: SEE BOM	
SHEET SCALE: 1:8	PROJECTION: 3RD ANGLE	APPROVED BY: JPP	DATE:	WEIGHT: 29.34KG	SHEET: 1 OF 2

DRAWING PATH : C:\3DEXPERIENCE\R1132102205677(dartagnan_leonard)\

THE INFORMATION CONTAINED IN THIS DRAWING IS THE SOLE PROPERTY OF PACKMAT EQUIPMENT. ANY REPRODUCTION IN PART OR AS A WHOLE WITHOUT THE WRITTEN PERMISSION OF PACKMAT EQUIPMENT IS PROHIBITED.
L'INFORMATION CONTENUE DANS CE DESSIN EST LA SEULE PROPRIÉTÉS DE PACKMAT EQUIPMENT. TOUTE REPRODUCTION PARTIELLE OU COMPLÈTE SANS LA PERMISSION ÉCRITE DE PACKMAT EQUIPMENT EST INTERDITE.

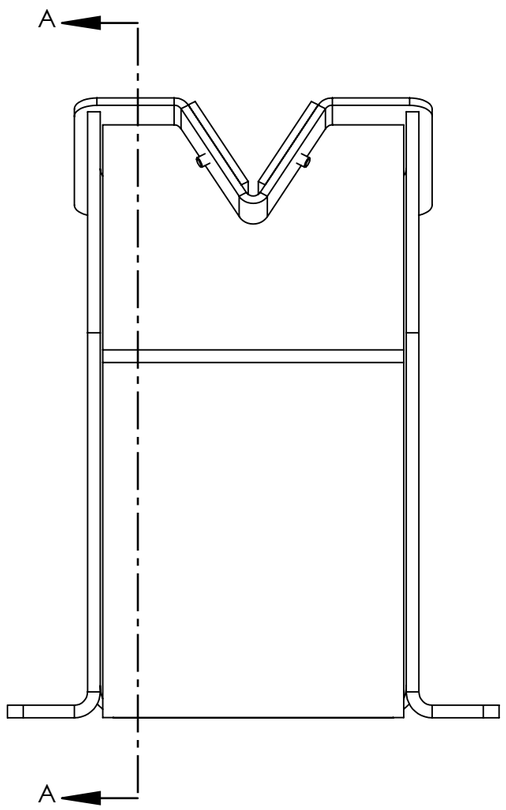

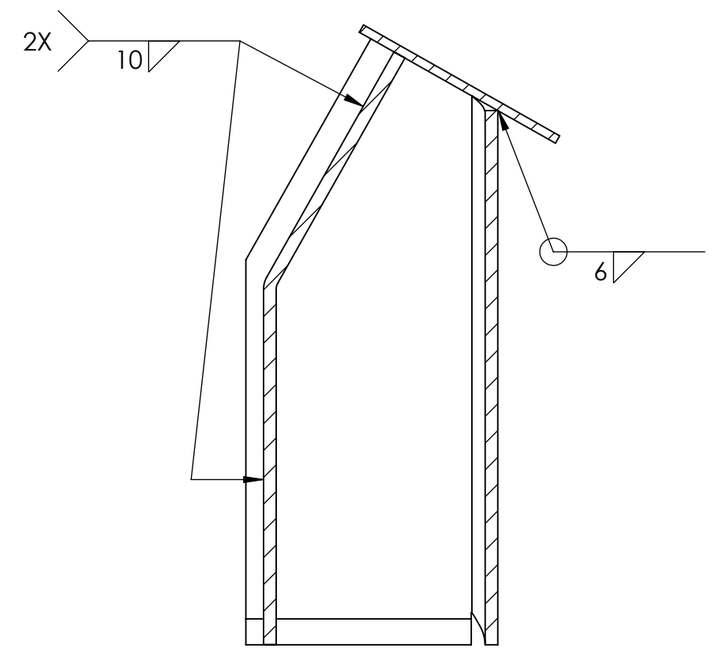

COUPE A-A

TOLERANCES UNLESS OTHERWISE SPECIFIED							
IMPERIAL X° : ± 0.5° X/X : ± 1/8" X,X : ± 1/16" X,XX : ± 0.01" X,XXX : ± 0.005"	METRIC X° : ± 0.5° X : ± 3mm X,X : ± 1.5mm X,XX : ± 0.25mm X,XXX : ± 0.1mm	PACKMAT EQUIPMENT		PART NO: PK607-PE07-03-CAC	REV:		
		DRAWN BY: JPP	DATE: 2025/05/02	DESCRIPTION: REHAUSSE PLASTRON			
		CHECKED BY:	DATE:	MATERIAL: SEE BOM			
SHEET SCALE: 1:4.5	PROJECTION: 3RD ANGLE	APPROVED BY: JPP	DATE:	WEIGHT: 29.34KG	SHEET: 2 OF 2		

THE INFORMATION CONTAINED IN THIS DRAWING IS THE SOLE PROPERTY OF PACKMAT EQUIPMENT. ANY REPRODUCTION IN PART OR AS A WHOLE WITHOUT THE WRITTEN PERMISSION OF PACKMAT EQUIPMENT IS PROHIBITED.
L'INFORMATION CONTENUE DANS CE DESSIN EST LA SEULE PROPRIÉTÉS DE PACKMAT EQUIPMENT. TOUTE REPRODUCTION PARTIELLE OU COMPLÈTE SANS LA PERMISSION ÉCRITE DE PACKMAT EQUIPMENT EST INTERDITE.

DRAWING PATH : C:\3DEXPERIENCE\R1132102205677(dartagnan_leonard)\