S3

CARPORT

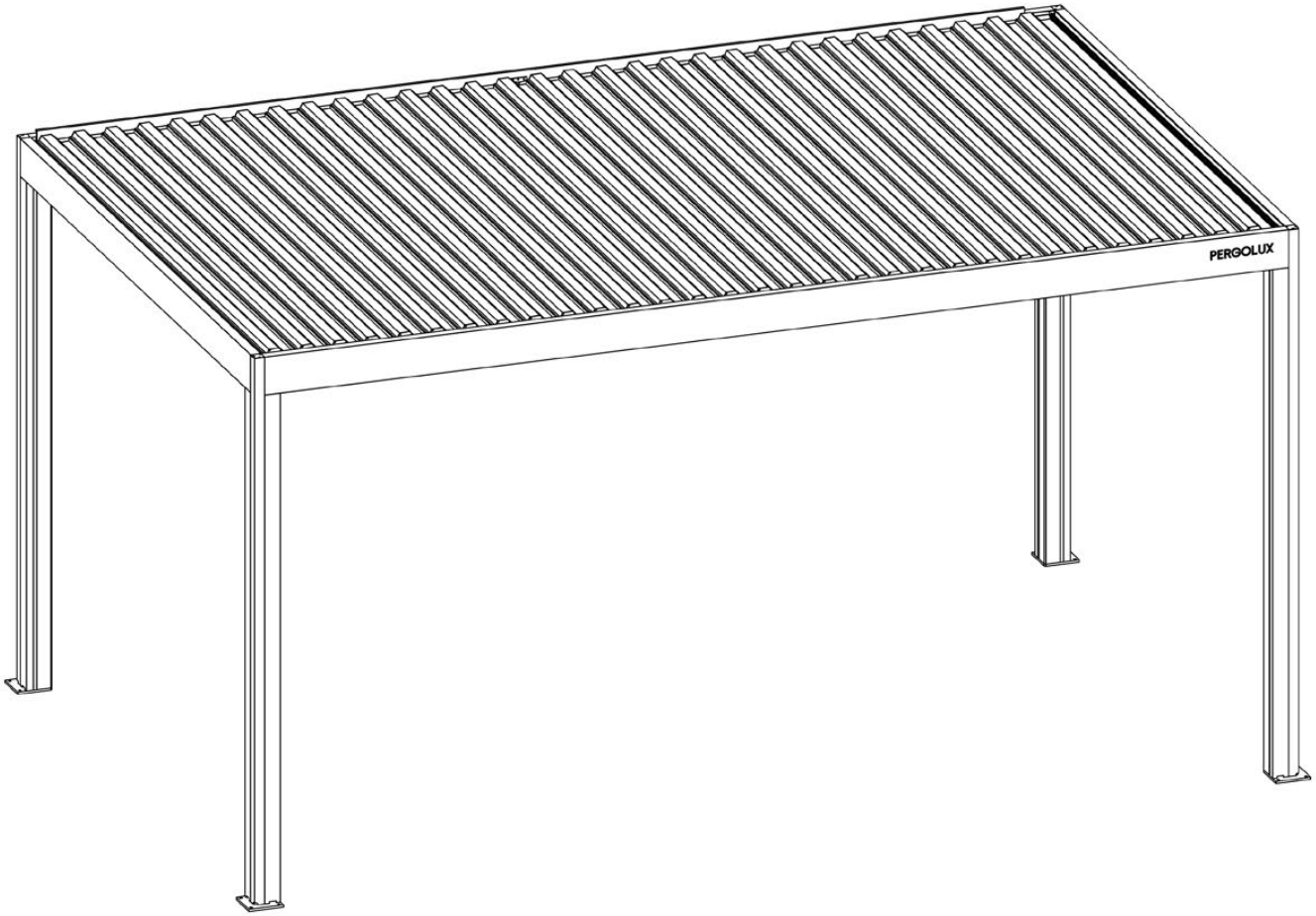

3x5m/10'x16'

FREESTANDING

PERGOLUX

Designed and developed by PERGOLUX

10 Year GUARANTEE

reddot winner 2024

TÜVRheinland CERTIFIED

Type Approved
Regular
Production
Surveillance

www.tuv.com
ID 1111293124

INFORMATION

INSTALLATION INSTRUCTIONS:

Ensure all parts are present and undamaged before starting the assembly.

Secure to a solid foundation with the correct fasteners for your foundation.

(If applicable) Install motors and wiring as shown. Ensure the electrical components are powered off during installation.

Use the correct lifting and installation equipment.

SAFETY WARNINGS:
Keep children and pets away during installation.

Do not operate the structure if parts are loose or improperly installed.

Ensure the structure is securely anchored to prevent accidents.

Do not insert fingers or any objects between the louvres.

MAINTENANCE:
Regularly clean the aluminum structure to maintain its appearance and prevent the accumulation of dirt.

Also, make sure to clean the gutters regularly. Inspect moving parts for wear and lubricate as necessary.

Check anchor points periodically to ensure stability.

INSTALLATIONSANLEITUNG:

Stellen Sie sicher, dass alle Teile vorhanden und unbeschädigt sind, bevor Sie mit der Montage beginnen.

Befestigen Sie sie mit den richtigen Befestigungselementen für Ihr Fundament auf einem soliden Fundament.

(Falls zutreffend) Installieren Sie Motoren und Verkabelung wie gezeigt. Stellen Sie sicher, dass die elektrischen Teile während der Installation ausgeschaltet sind.

Verwenden Sie die richtige Hebe- und Installationsausrüstung.

SICHERHEITSHINWEISE:
Halten Sie Kinder und Haustiere während der Installation fern.

Betreiben Sie die Struktur nicht, wenn Teile lose oder nicht richtig installiert sind.

Stellen Sie sicher, dass die Struktur sicher verankert ist, um Unfälle zu vermeiden.

Stecken Sie keine Finger oder andere Gegenstände zwischen die Lamellen.

WARTUNG:
Reinigen Sie die Aluminiumstruktur regelmäßig, um ihr Aussehen zu erhalten und die Ansammlung von Schmutz zu verhindern.

Reinigen Sie auch die Dachrinnen regelmäßig. Überprüfen Sie bewegliche Teile auf Verschleiß und schmieren Sie sie bei Bedarf.

Überprüfen Sie die Ankerpunkte regelmäßig, um die Stabilität sicherzustellen.

CE

Pergolux International GmbH, 9 Goethestraße,
36043 Fulda,
Germany
25
DOP-PER-FSWM-S2S3

EN 13561:2015
Pergolux Pergola S2/S3
External use in buildings and other construction works
Resistance to wind loads: Class 6 (EN 13561)

INFORMATION

Congratulations and thank you for choosing a PERGOLUX Product!

To enjoy this product for a long time as well as for your own and others' safety, please follow the installation instructions. Before you start assembling and using the carport, ensure that all the parts listed in the manual are delivered and intact. If you need help with the installation, you can contact us by chat, phone, e-mail or via our website.

We wish you good luck with the assembly process!

Contact:

- pergolux.de
- pergoluxshop.com
- pergolux.se
- Australia
- pergolux.ch
- pergolux.nl
- pergolux.cl
- pergolux.co.uk
- pergolux.dk
- pergolux.no
- pergolux.fr
- pergolux.it
- at.pergolux.de
- pergolux.com.br

Having some issues and need to submit a claim?

If you are facing an issue with your PERGOLUX product and needs to submit a claim please read this article:

Complaints and Technical Issues

Reklamation einreichen. Schritt für Schritt Anleitung

Submit the claim here:

Anfrage einreichen

Anfrage einreichen

Een aanvraag indienen

Submit a request

Submit a request

Enviar una solicitud

Enviar una solicitud

Submit a request

Send oss en henvendelse

Skicka oss en förfrågan

Send os en forespørgsel

Envoyer une demande

Invia una richiesta

SYMBOL EXPLANATION

Indicates the outside of the pergola structure.

Indicates the inside of the pergola structure.

Important! Be cautious when assembling or handling this part.

Required tools for assembly.

Ensure grounding is connected before powering up.

Align slats according to sunlight direction for optimal shading.

Repeat this step as many times as the number indicates

Turn around

This step may require extra force.

Key information to follow during installation.

This item must be purchased separately.

Apply lubricant to make screw assembly easier.

Do not use a regular hammer to avoid damage.

AC Input

Motor

INFORMATION

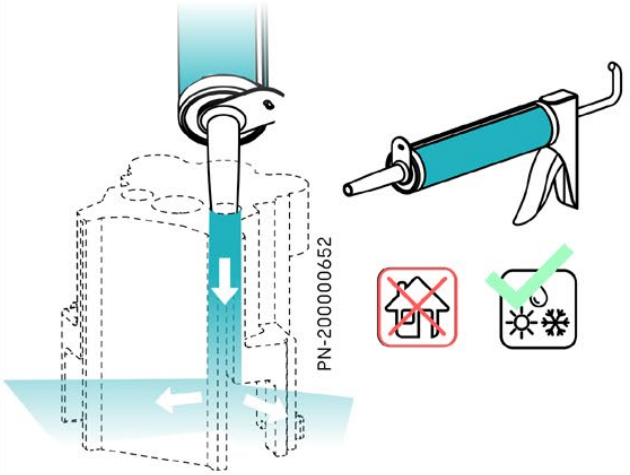

Use a high-quality, waterproof, UV-resistant silicone suitable for metal surfaces, to seal the corners of the pergola and prevent leakage. Look for products that are designed for outdoor use and provide a strong, lasting bond.

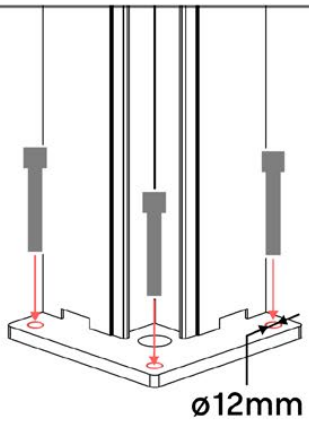

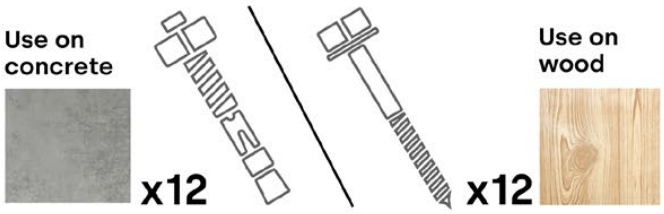

You need to buy anchoring hardware/ screws suitable for your installation surface.

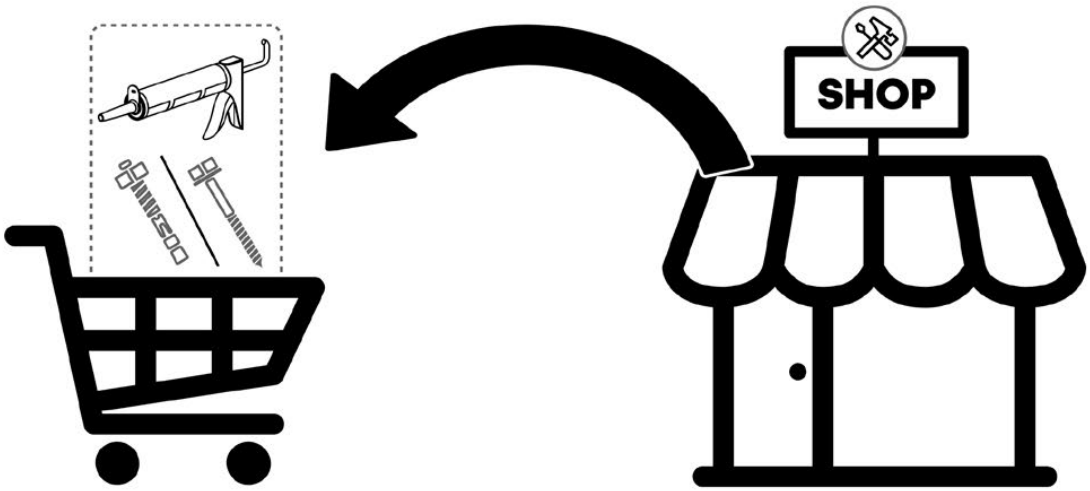

INFORMATION

All screws from **PERGOLUX** are made of stainless steel, ensuring durability and resistance to rust. To prevent damage to screws, follow these guidelines:

- **DO NOT OVERTIGHTEN**: Apply appropriate force to avoid stripping the threads.
- **CHOOSE THE CORRECT TOOL:** Use the proper screwdriver or bit to avoid damaging the screw head.
- **ENSURE PROPER USE:** With correct installation, screws will maintain their integrity and functionality over time.
- **USE LUBRICATION:** Apply lubricant to make screw assembly easier.

Apply lubricant to make screw assembly easier.

TOOLS

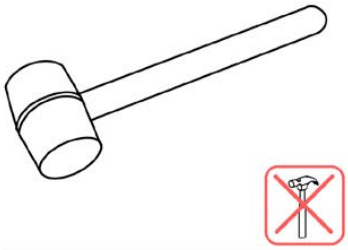

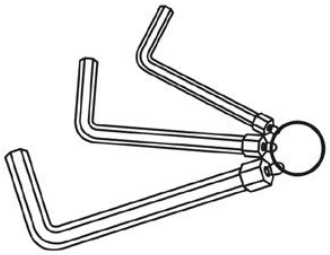

3mm, 4mm, 5mm

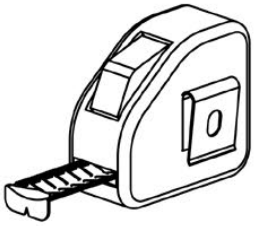

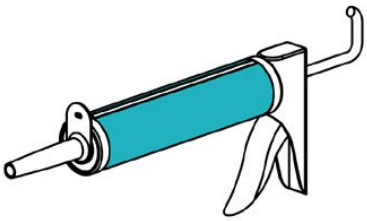

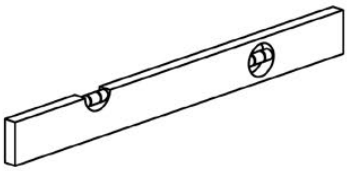

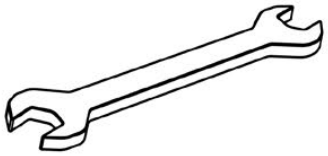

5,5mm, 7mm, 8mm,
10mm, 13mm

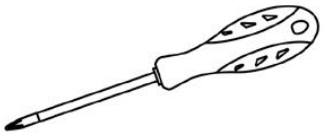

TX15, TX20, TX25, TX30

PACKAGE OVERVIEW

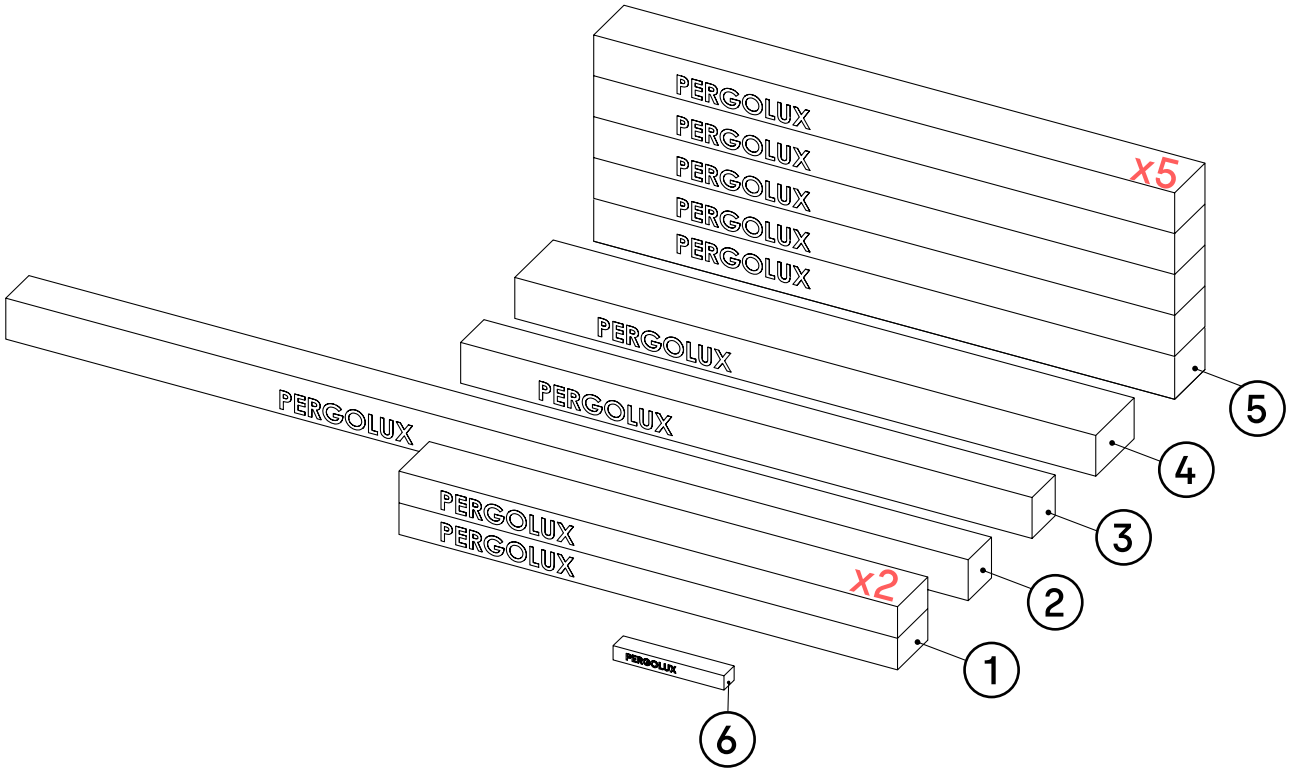

ORDER	ANTHRACITE	WHITE
1	C103	C105
2	B117	B129
3	B119	B131
4	L113	L125
5	L112	L124
6	A106 MANUAL MOTOR	A108 MANUAL MOTOR

ITEMS IN BOX

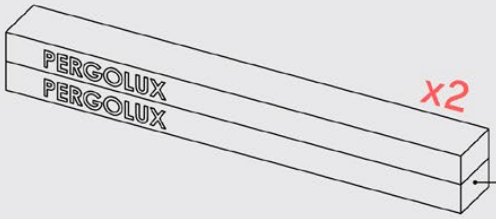

	ANTHRACITE	WHITE
1	C103	C105

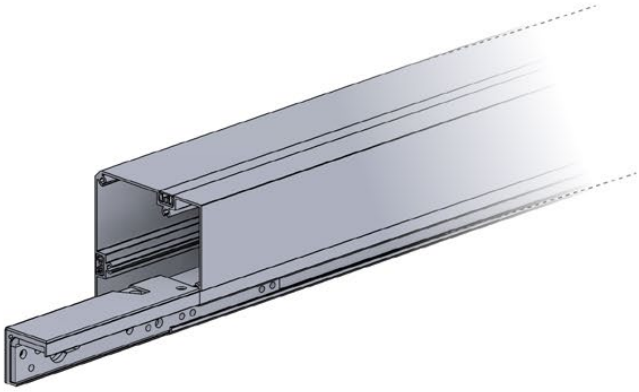

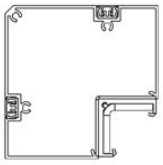

CORNER POLE
PN-200000559
4x

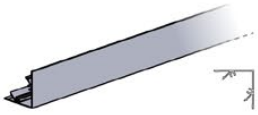

PN-200000546

4x

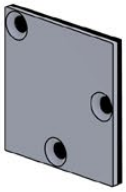

PN-200000518

K **4x**

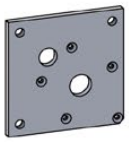

PN-200000535

B **4x**

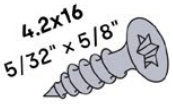

PN-200000840

K **12x**

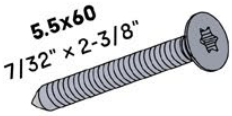

PN-200000560

B **20x**

ITEMS IN BOX

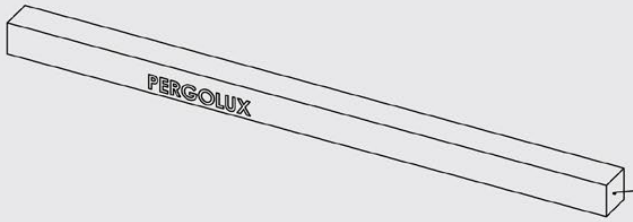

	ANTHRACITE	WHITE
2	B116	B128

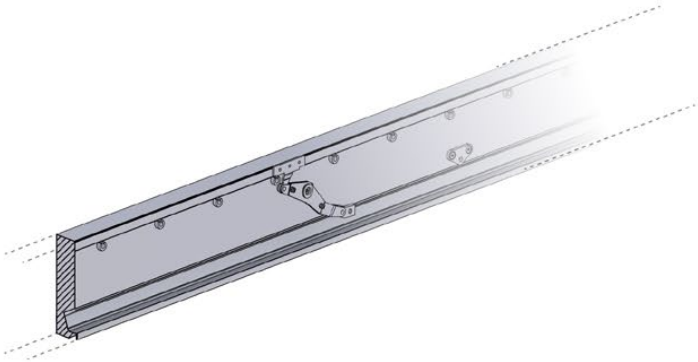

L2 BEAM
PN-200000712

1x

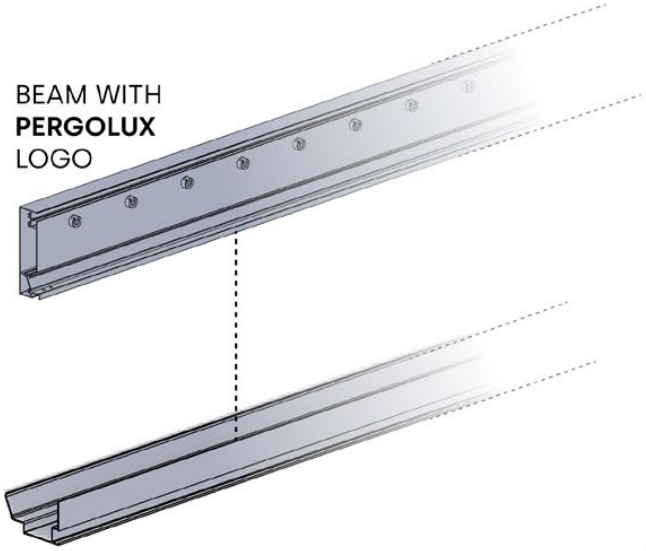

L1 BEAM
PN-200000690

1x

PN-200000688

2x

Pre-assembled part

PN-200000592

2x

PN-200000596

1x

ITEMS IN BOX

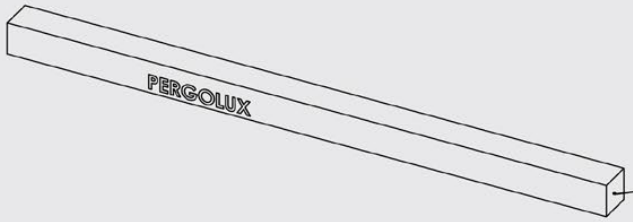

	ANTHRACITE	WHITE
2	B116	B128

PN-200000668
J 8x

PN-200000660
M 8x

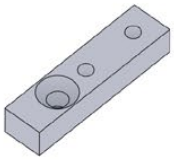

PN-200000667
J 8x

PN-200000652
O 4x

PN-200000568
E 32x

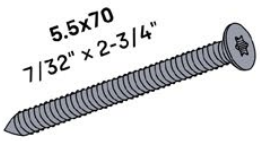

PN-200000958
O 4x

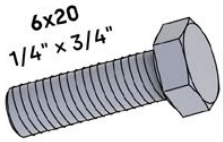

PN-200000658
J 16x

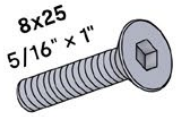

PN-200001334
T 1x

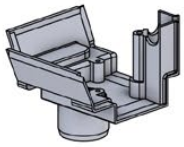

PN-200000653
M 4x

PN-200000969
T 1x

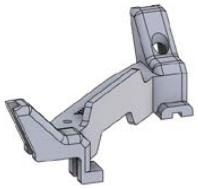

PN-200000650
L 4x

PN-200000677
H 25x

ITEMS IN BOX

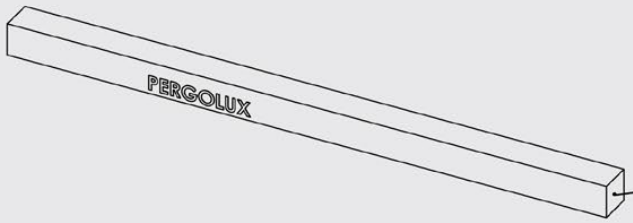

	ANTHRACITE	WHITE
2	B116	B128

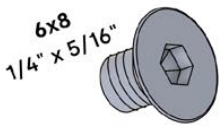

PN-200000573

S 3x

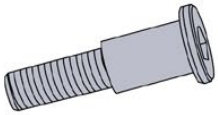

PN-200000532

R 25x

LUBRICANT

TOOLS 1x

PN-200000529

R 25x

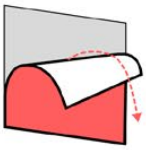

PN-200001861

TAPE 8x

PN-200000666

R 25x

ITEMS IN BOX

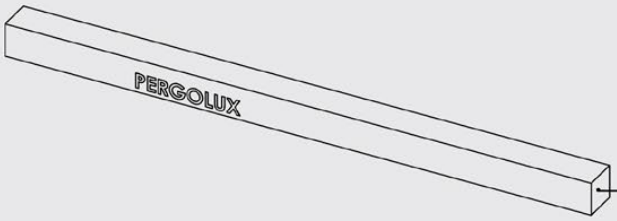

	ANTHRACITE	WHITE
3	B120	B132

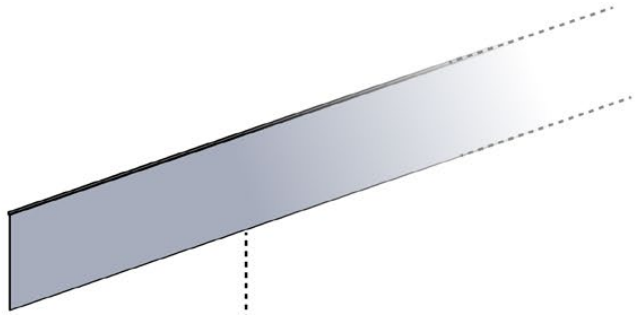

PN-200000707

2x

Pre-assembled part

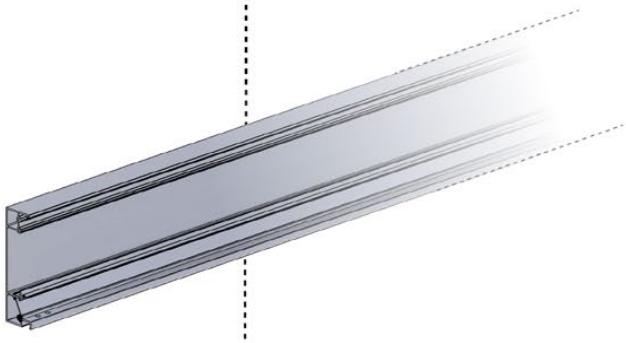

W BEAM
PN-200000709

2x

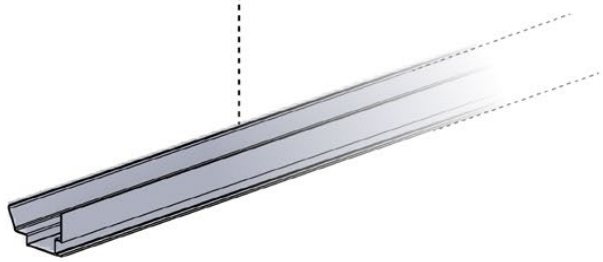

PN-200000687

2x

Pre-assembled part

ITEMS IN BOX

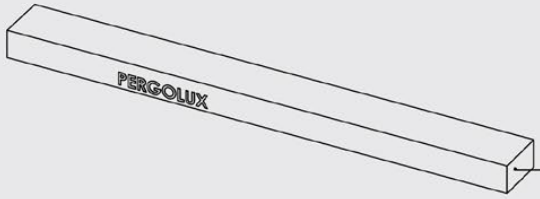

	ANTHRACITE	WHITE
4	L116	L128

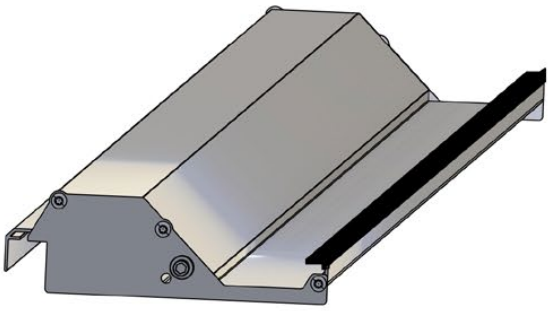

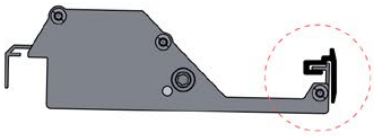

PN-200000718

1x

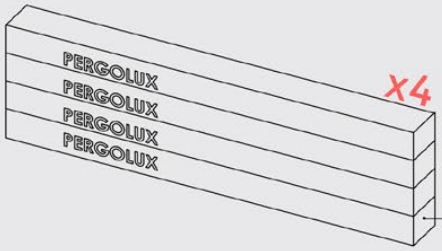

	ANTHRACITE	WHITE
5	L115	L127

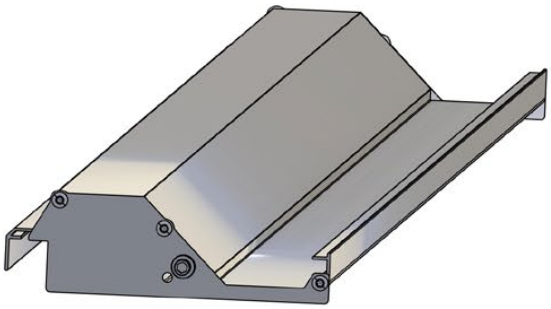

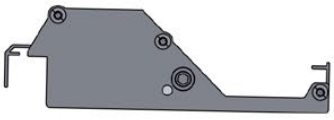

PN-200000717

24x

ITEMS IN BOX

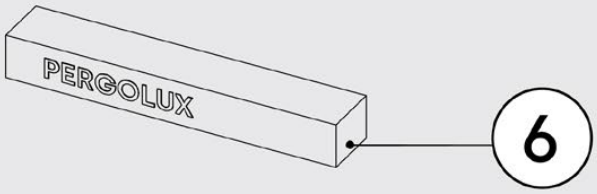

6

MANUAL MOTOR

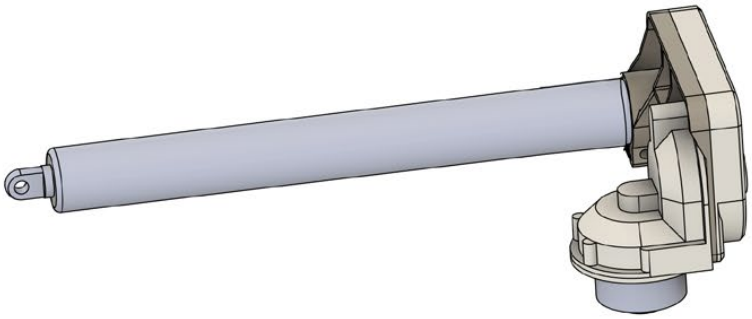

Manual motor
PN-200001563
1x

PN-200001623

1x

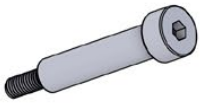

PN-200001624

1x

PN-200001625

2x

Hand crank

1x

INFORMATION

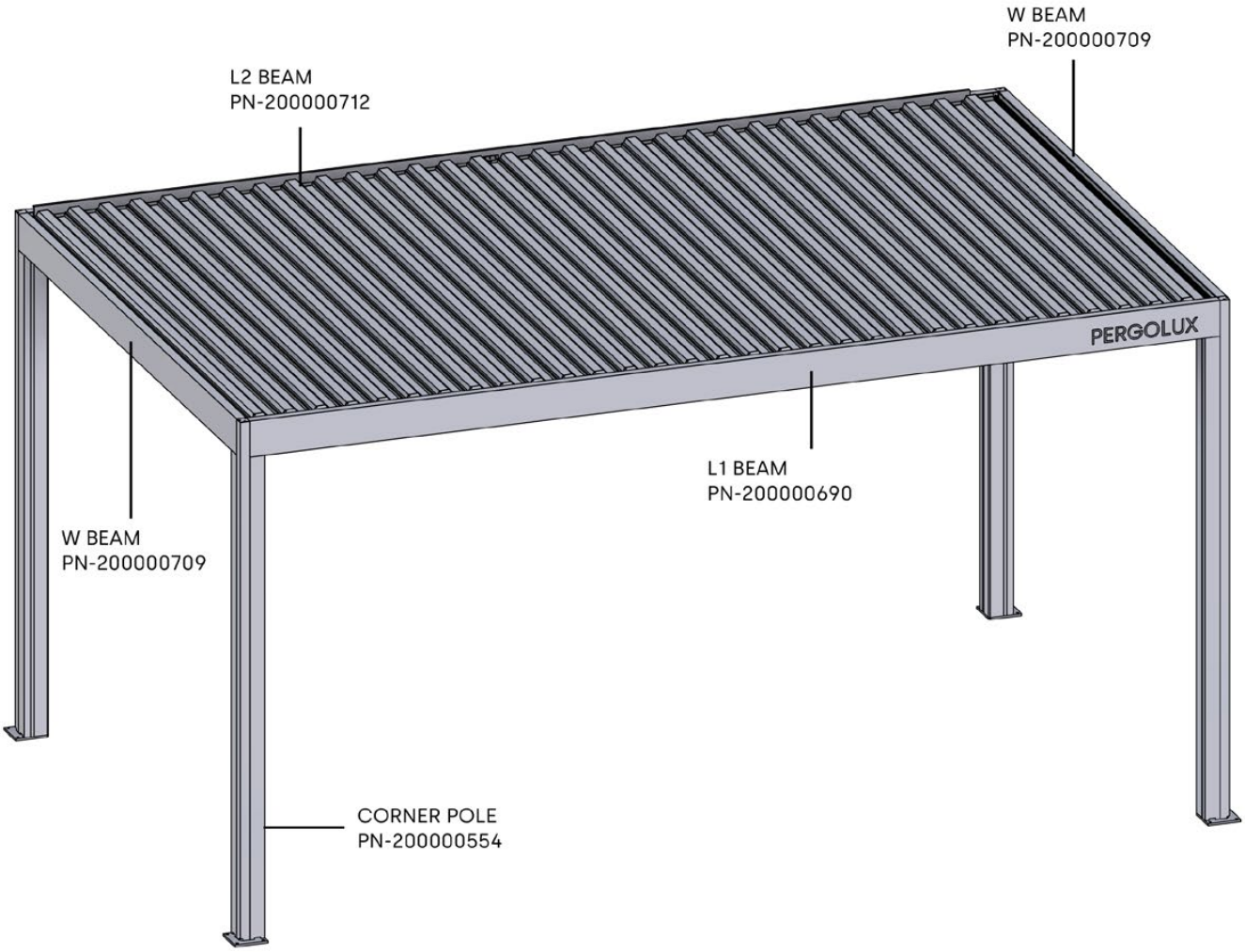

INFORMATION

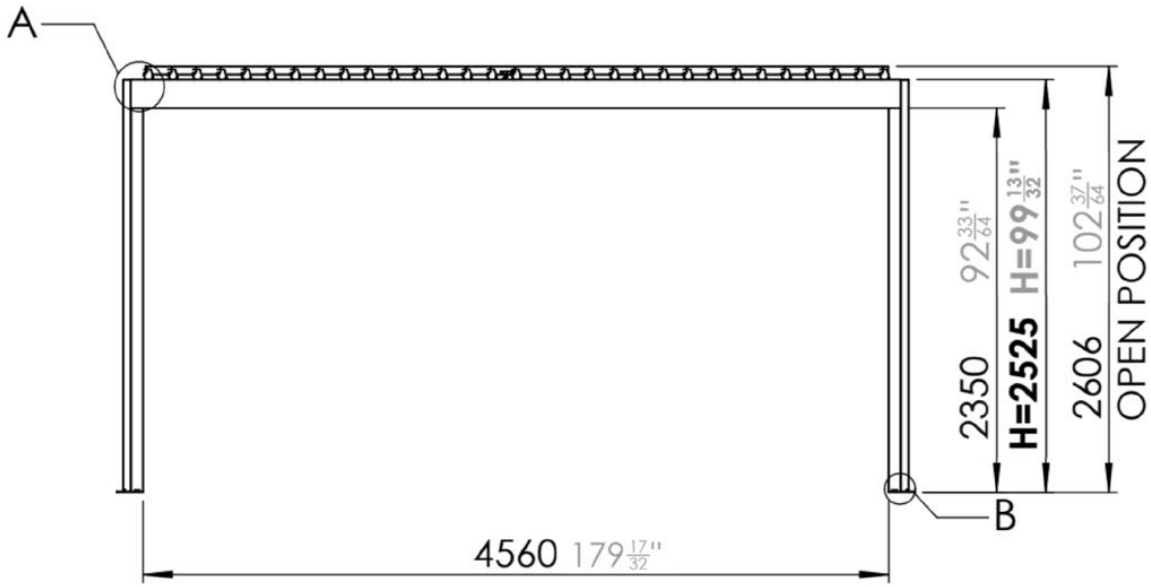

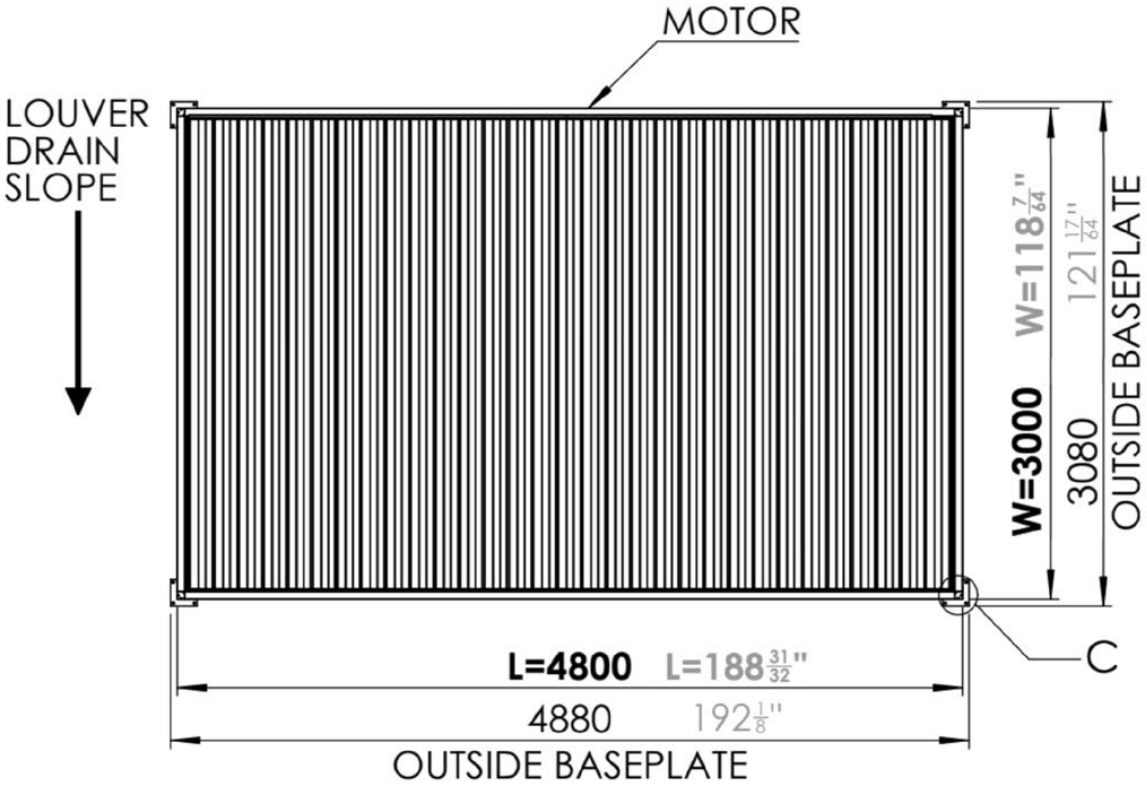

1 Are you going to install LED-Lights, screens or glass walls?

It is recommended to remove these Led strip covers and clips now before installing the carport.

Cover and clips

PN-200000512
LED STRIP COVER CLIP

LED COVER

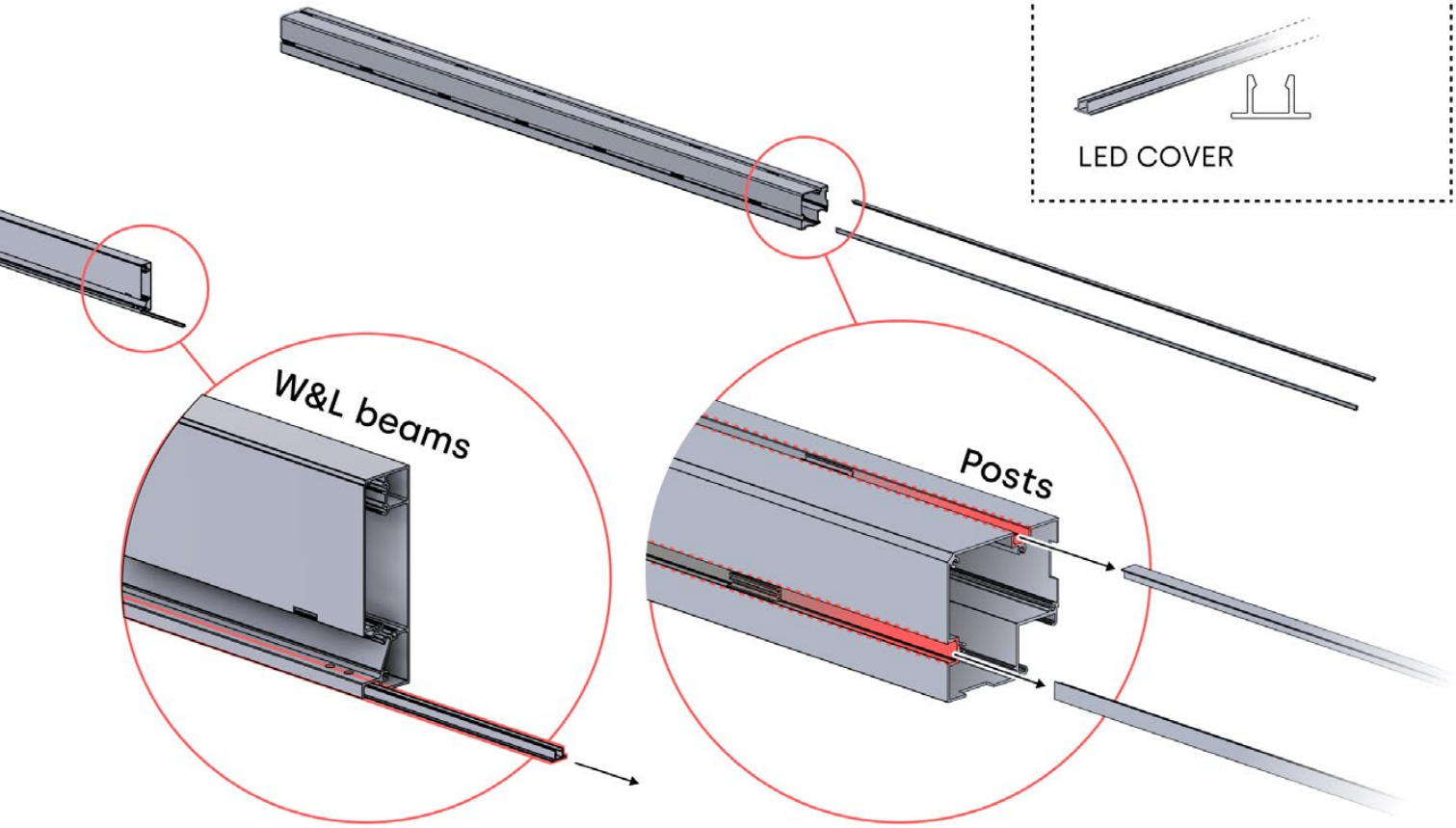

Gutter beams

If you are using **LED-lights**, then remove strips and clips from **gutter**.

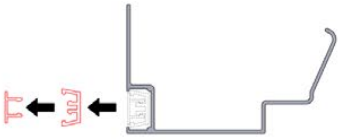

W&L beams

If you are using **glass walls or screens**, then remove strips and clips from **beams.**

Posts

If you are using **glass walls**, then remove strip cover from **posts**.

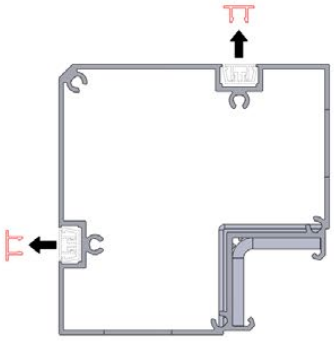

2

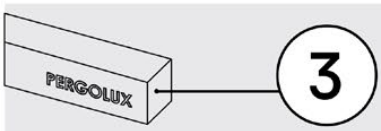

ANTHRACITE: B119
WHITE: B131

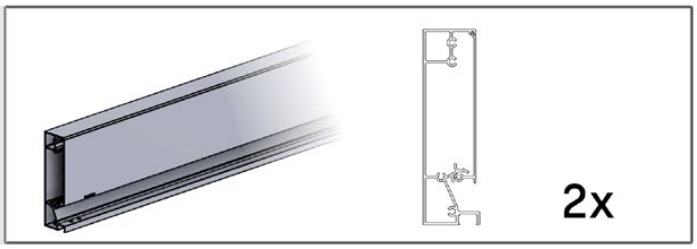

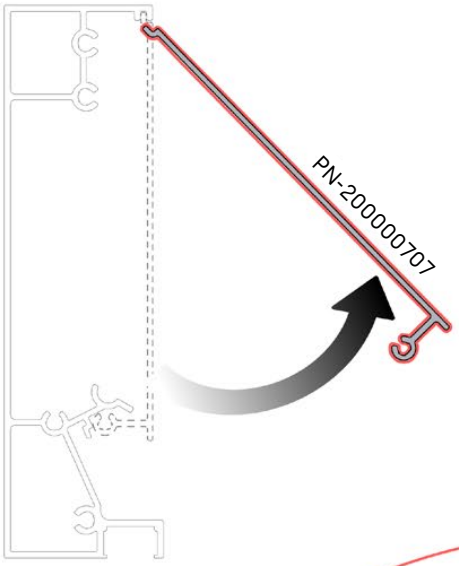

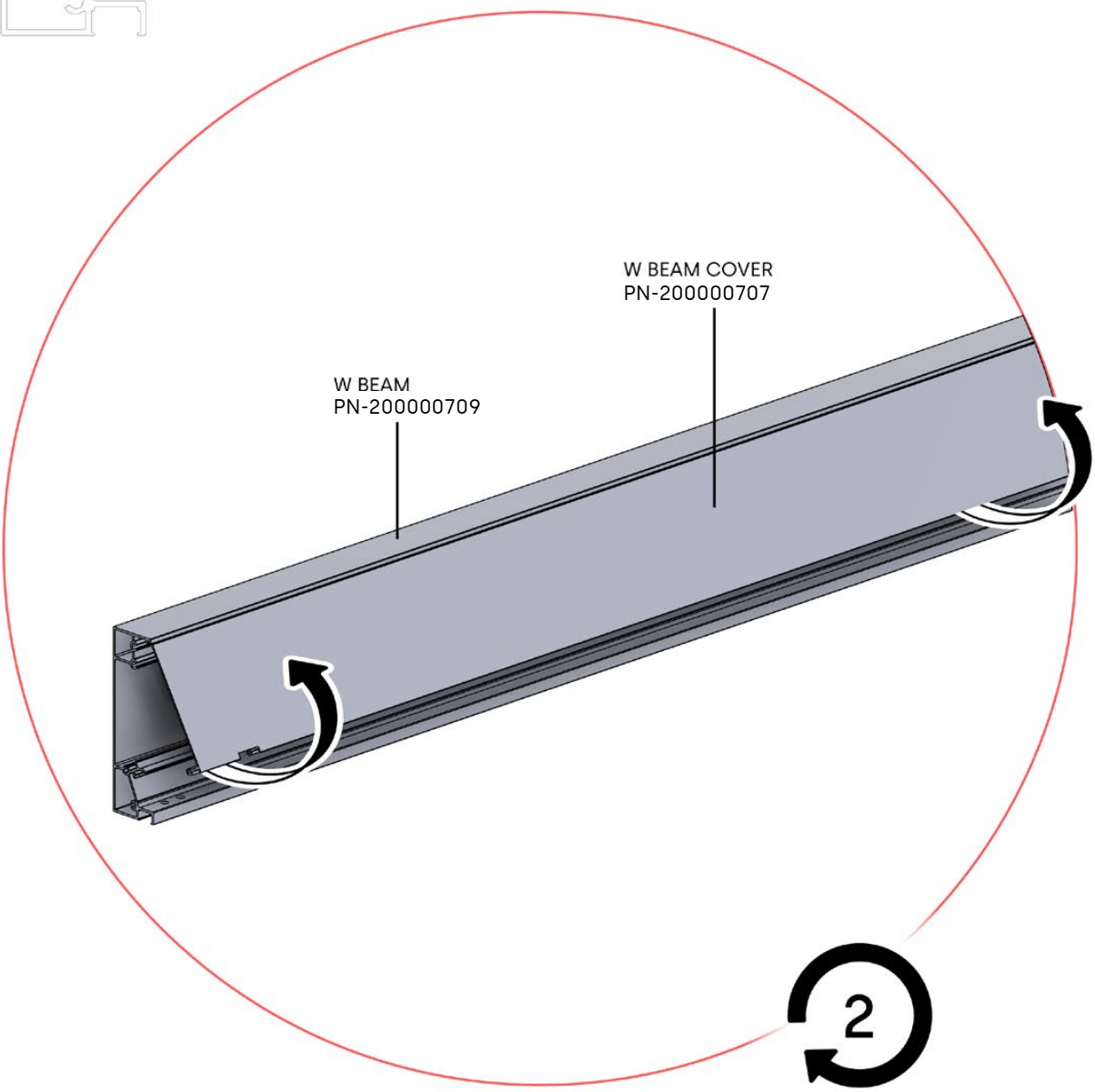

3

ANTHRACITE: C103
WHITE: C105

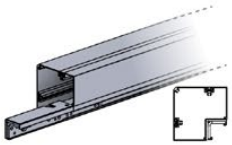

PN-200000559

4x

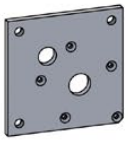

PN-200000535

B 4x

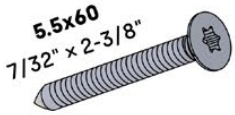

PN-200000560

B 20x

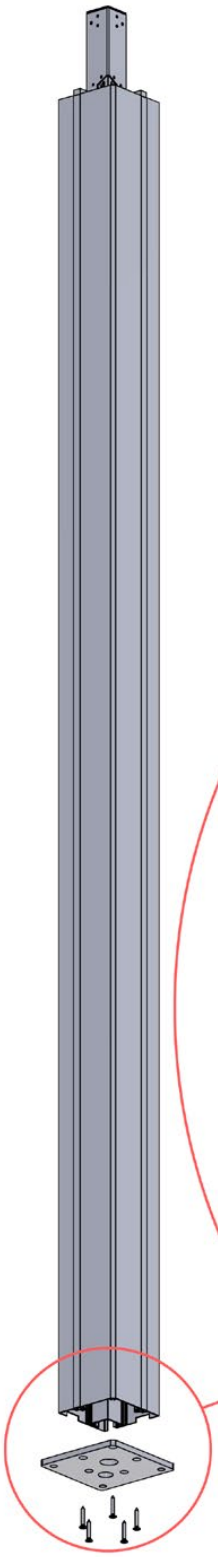

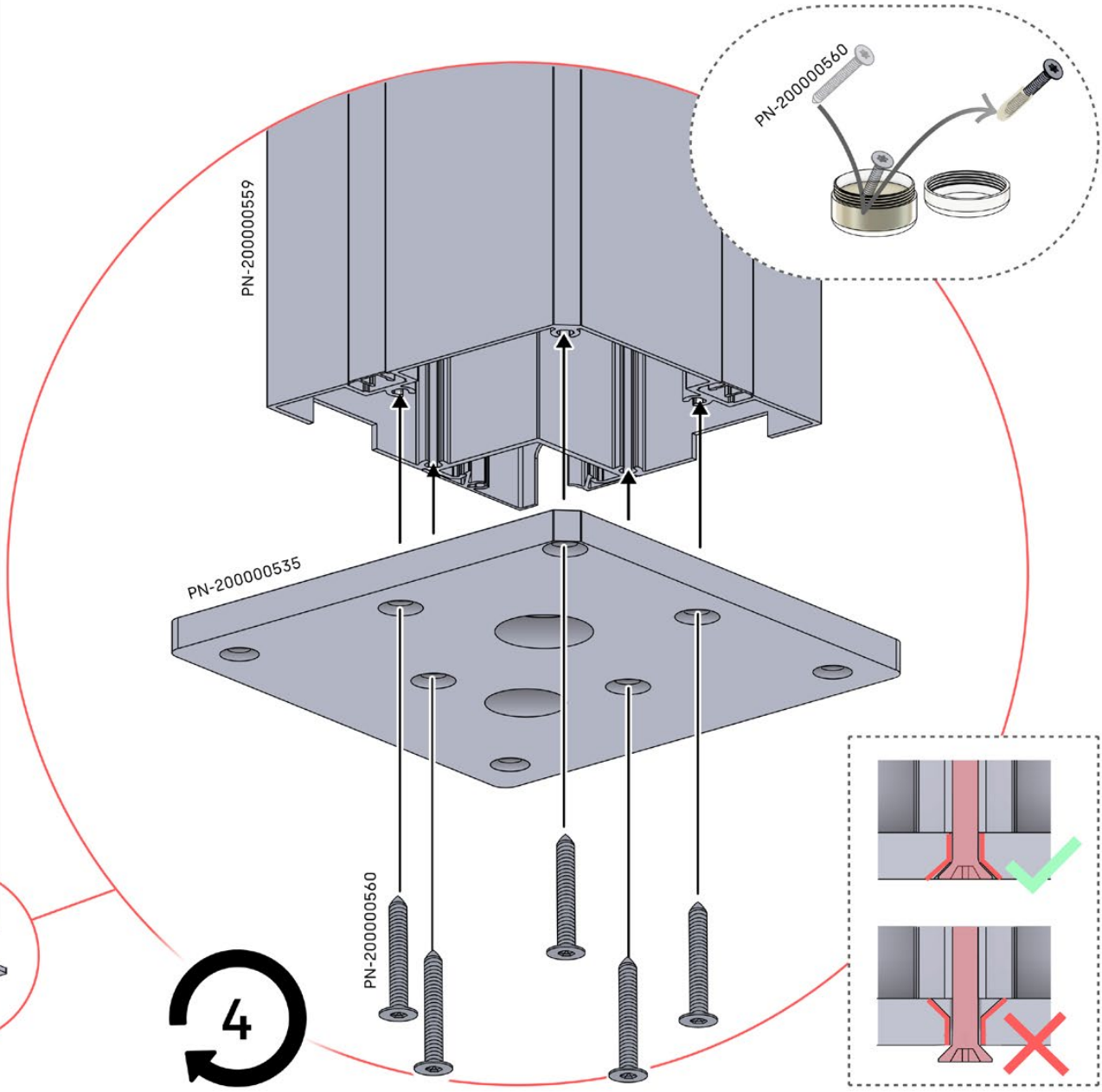

4

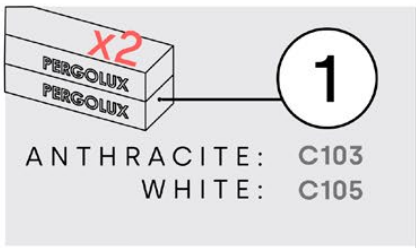
x2
PERGOLUX
PERGOLUX
1
ANTHRACITE: C103
WHITE: C105

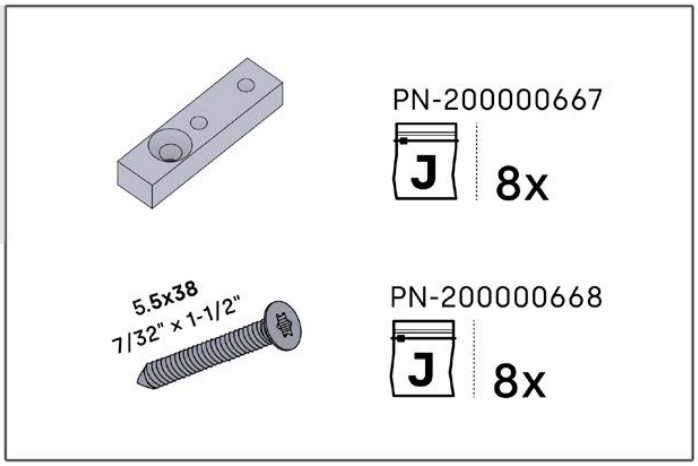
PN-200000667
J
8x
5.5x38
7/32" x 1-1/2"
PN-200000668
J
8x

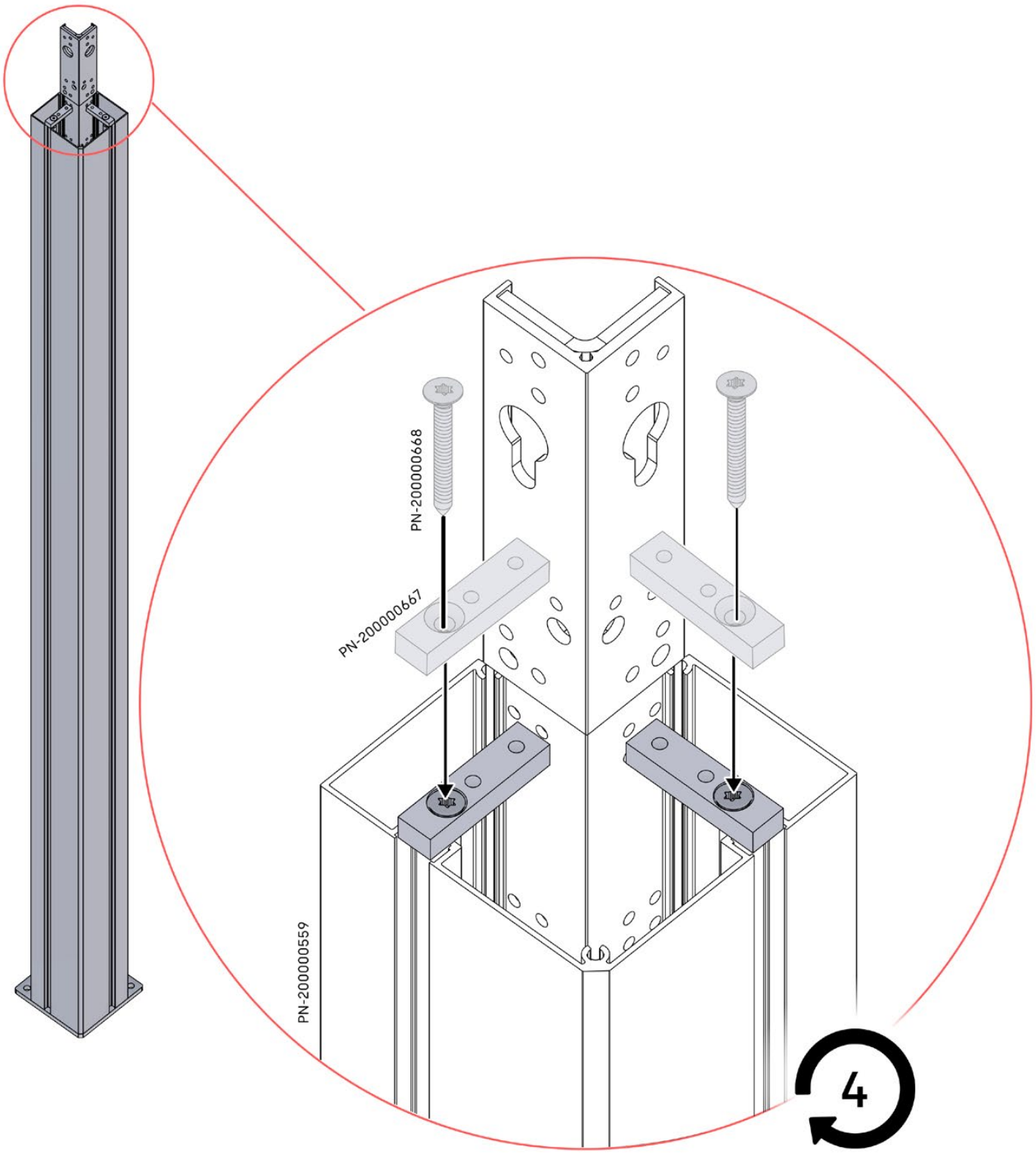
PN-200000668
PN-200000667
PN-200000559
4

5

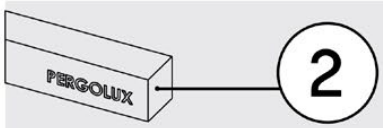

ANTHRACITE: B117
WHITE: B129

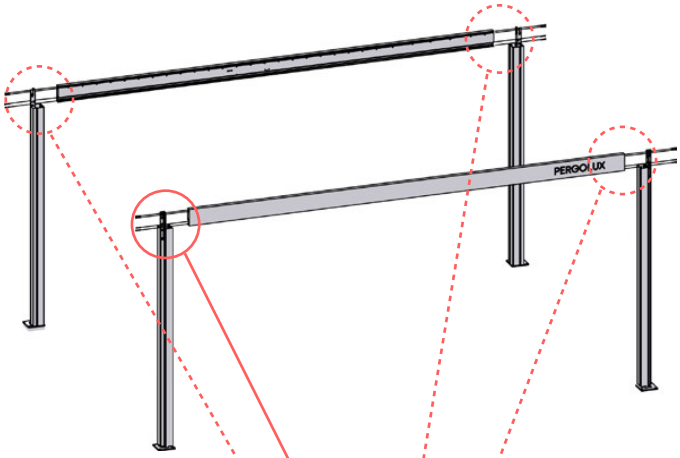

PN-200000712

1x

BEAM WITH **PERGOLUX** LOGO

PN-200000690

1x

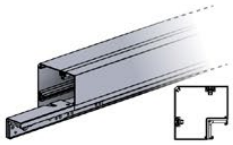

PN-200000559

4x

PN-200000568

E **16x**

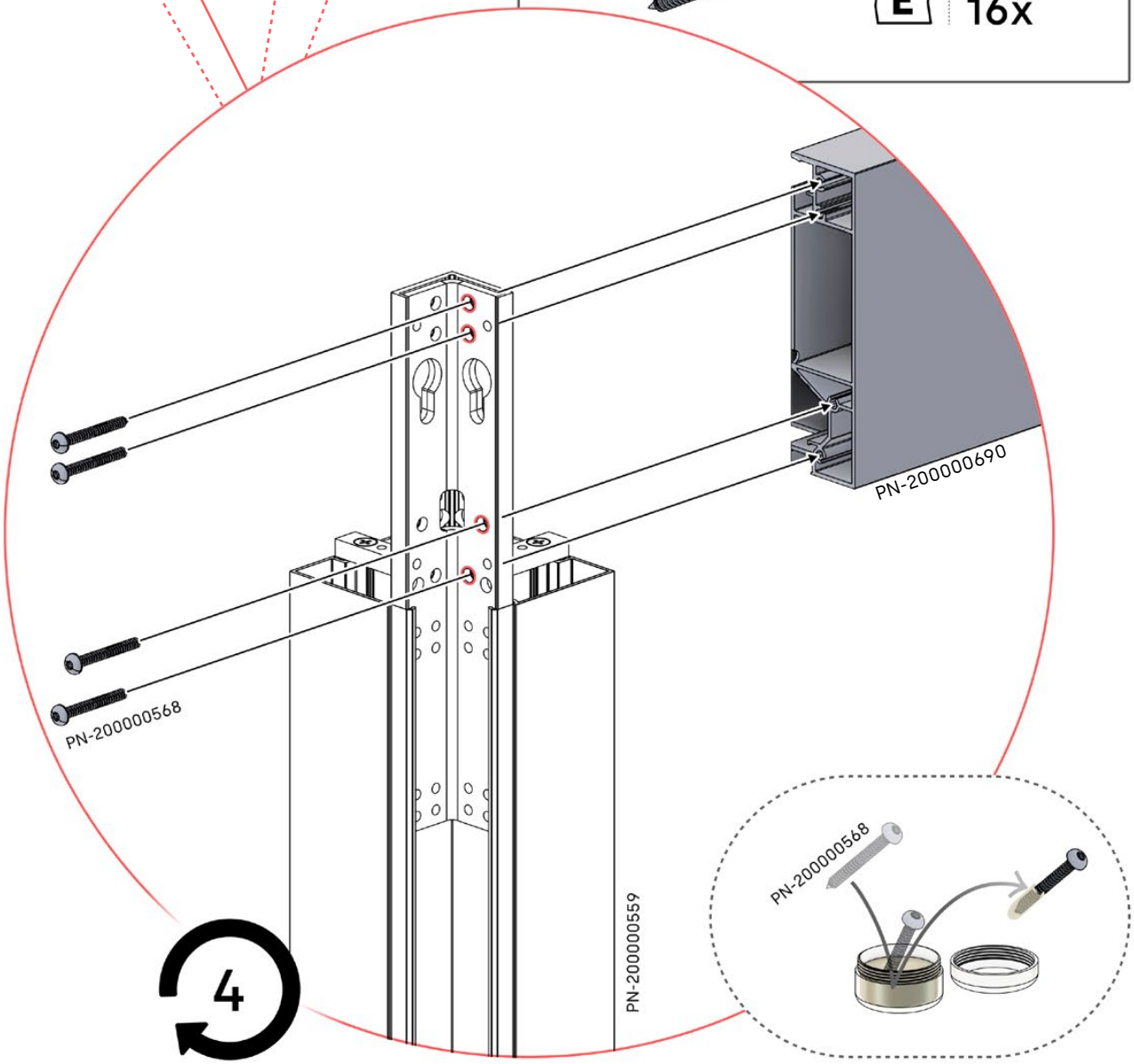

6

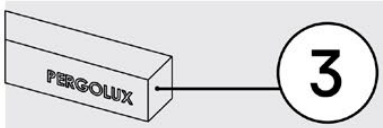

ANTHRACITE: B119
WHITE: B131

PN-200000709

2x

PN-200000568

16x

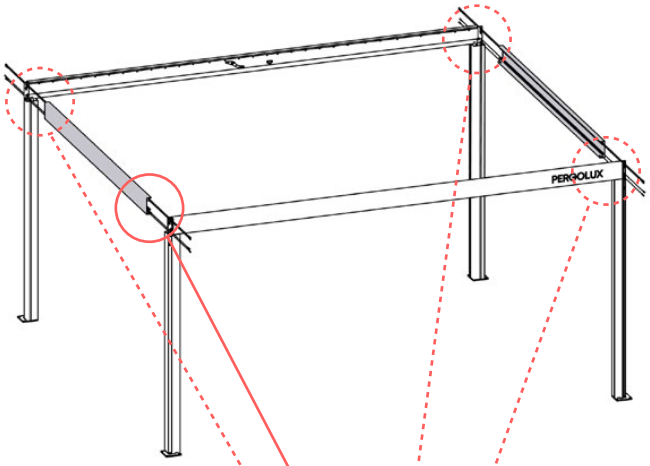

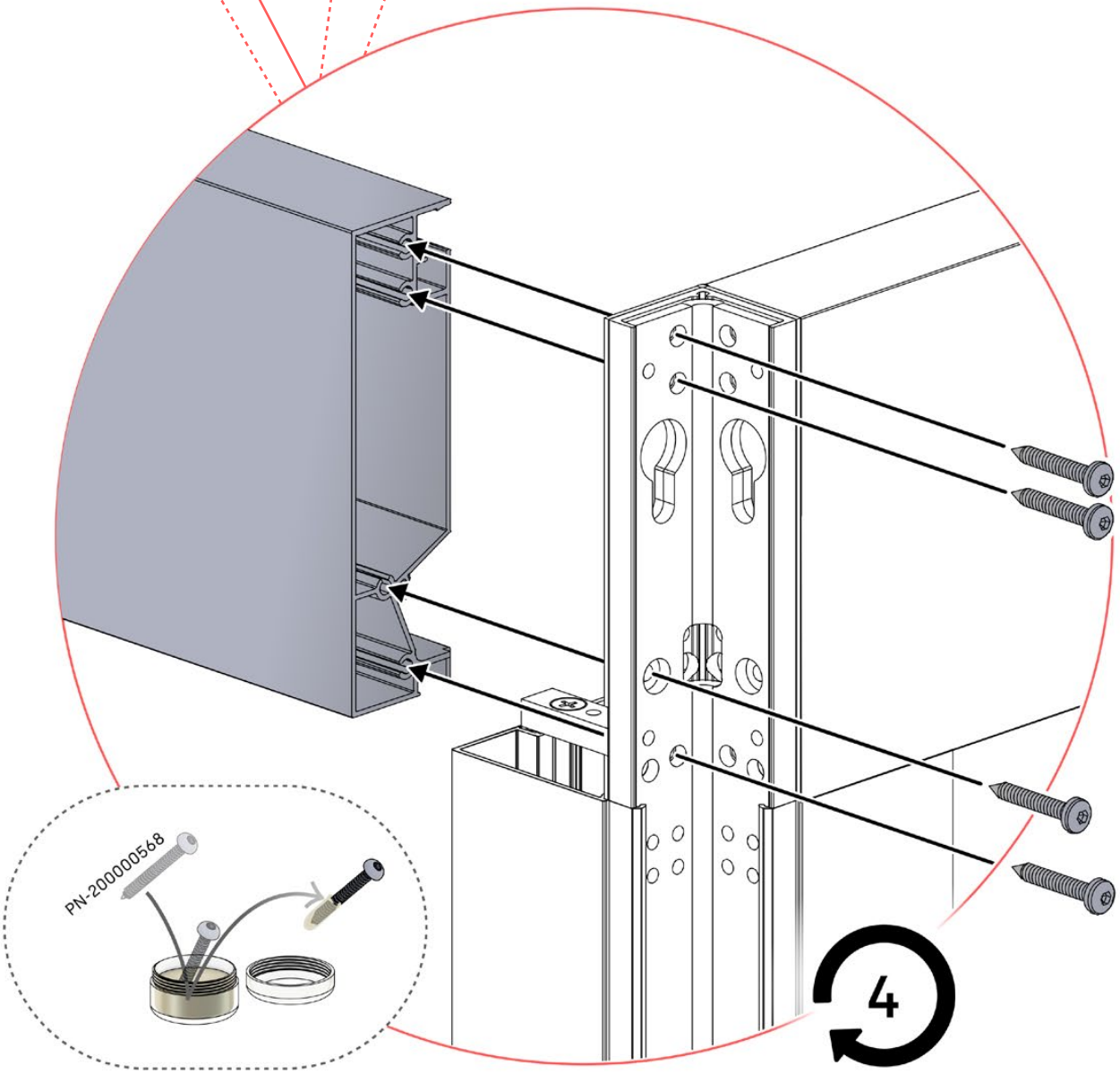

7

2

ANTHRACITE: B117
WHITE: B129

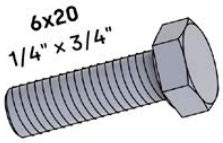

PN-200000658

J 16x

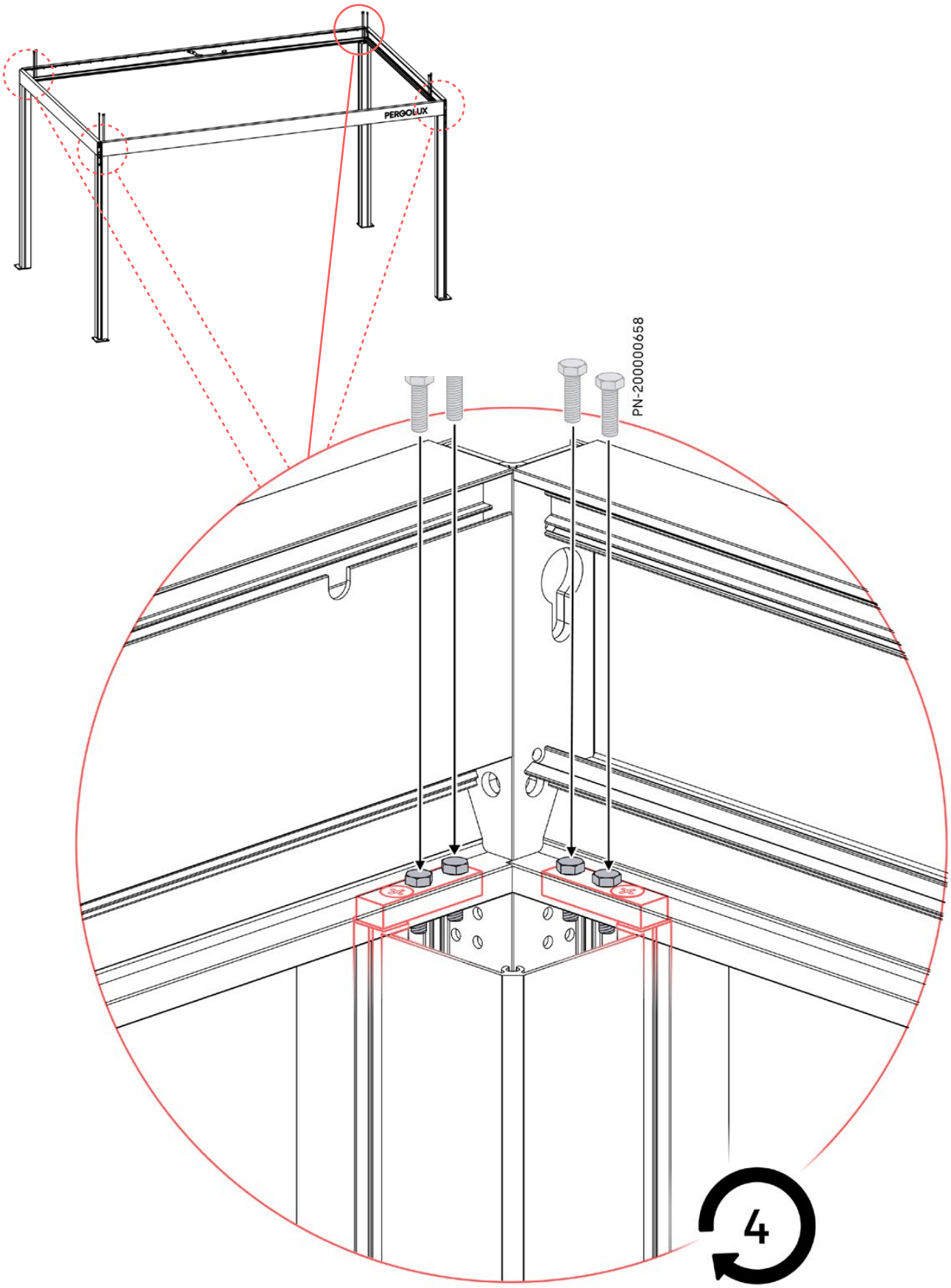

8

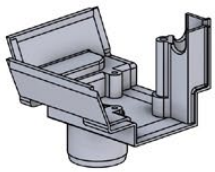

PN-200000653

M 4x

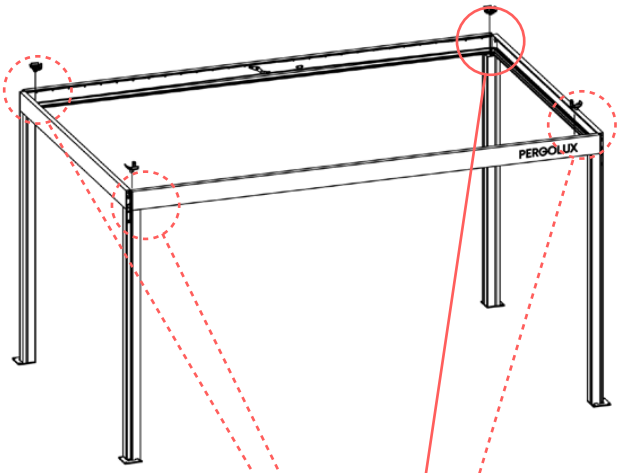

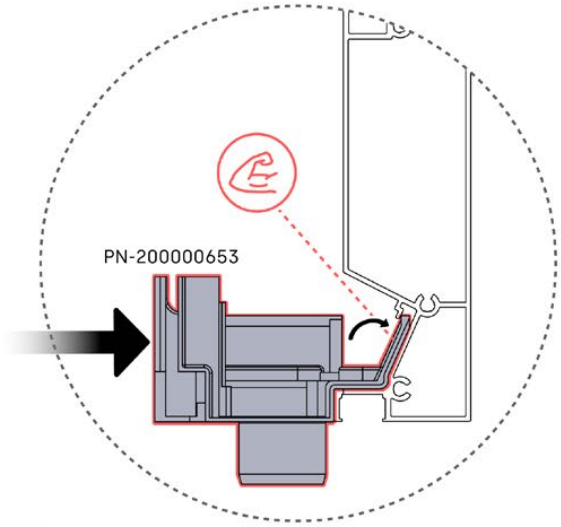

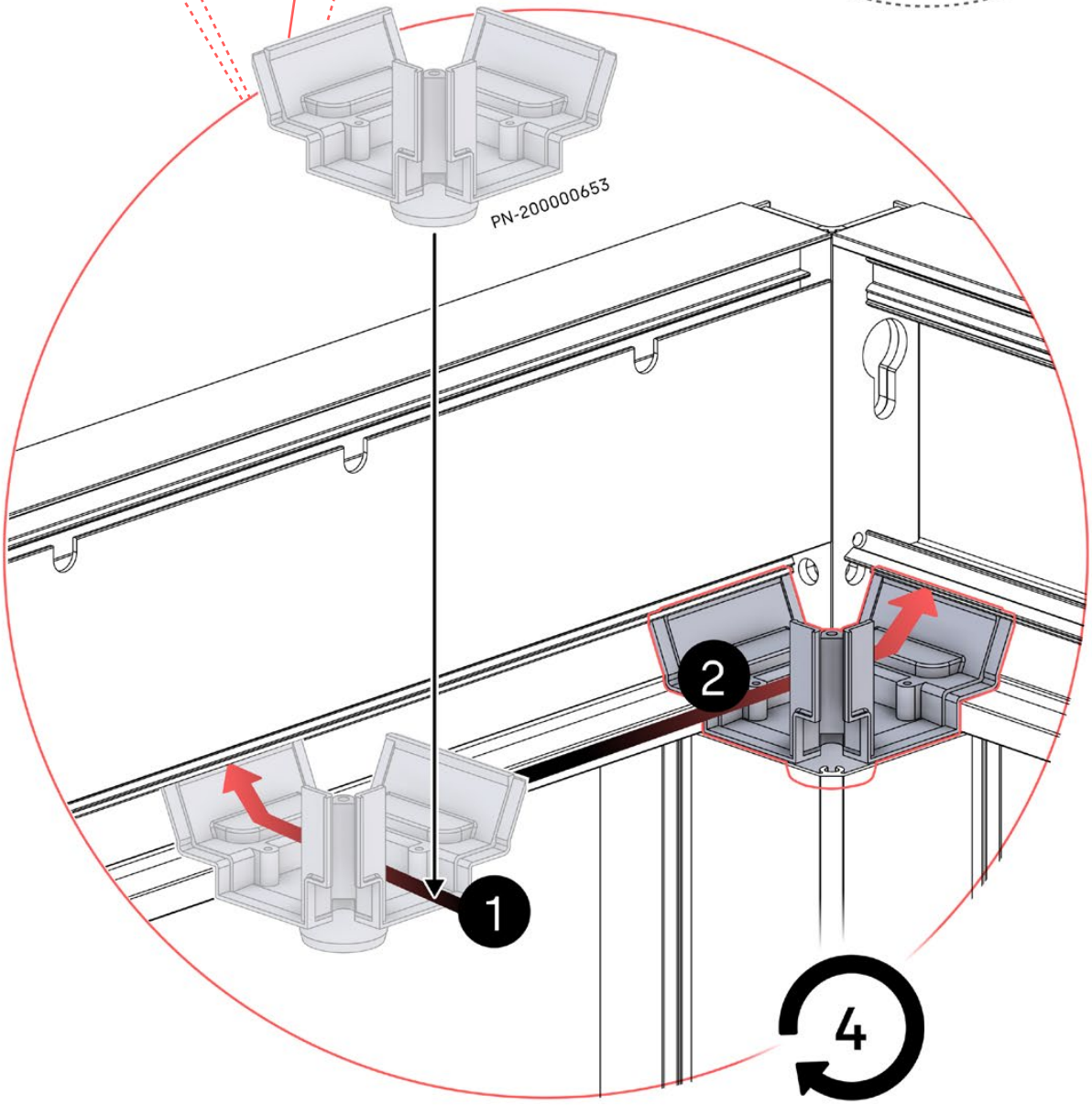

9

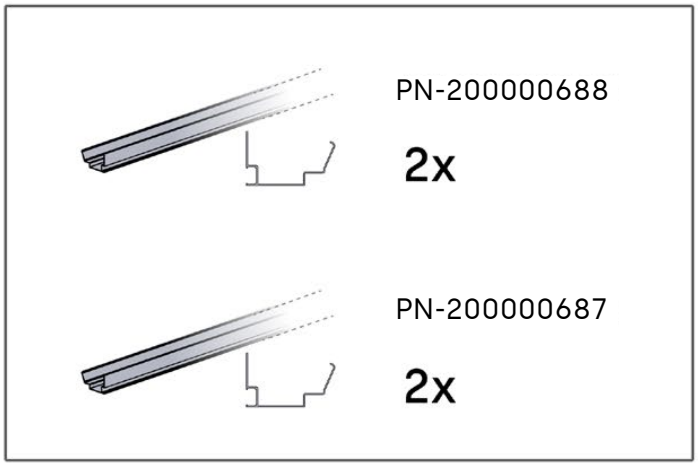

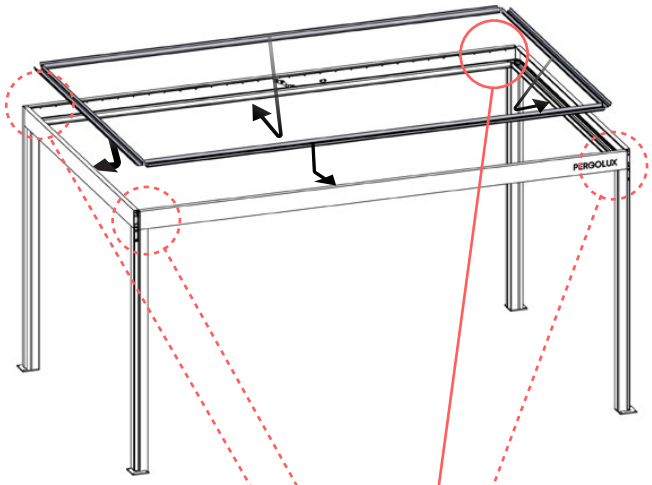

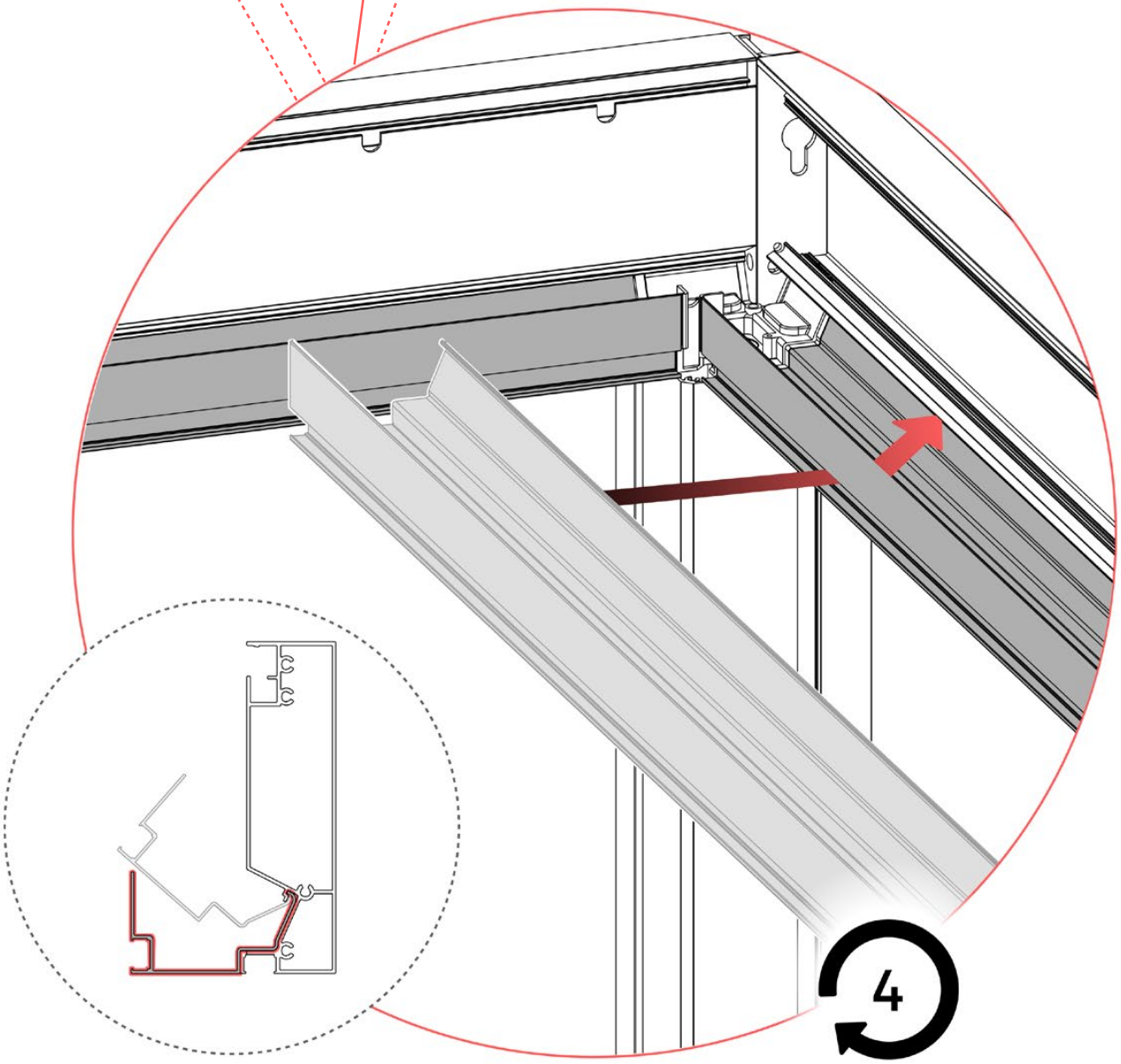

10

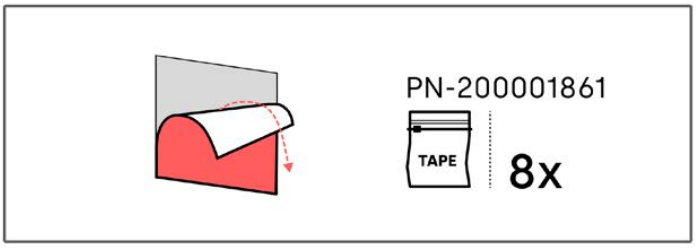

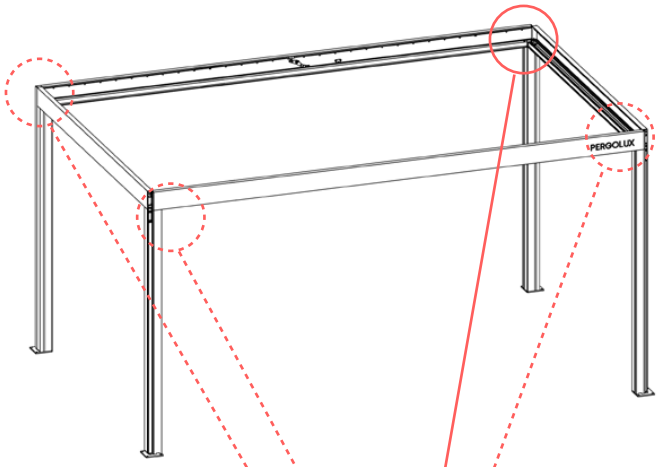

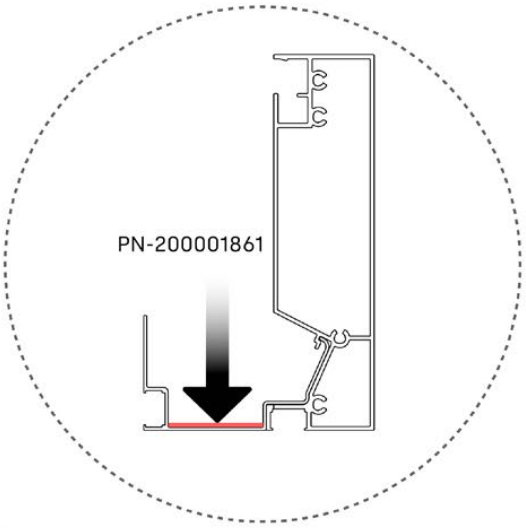

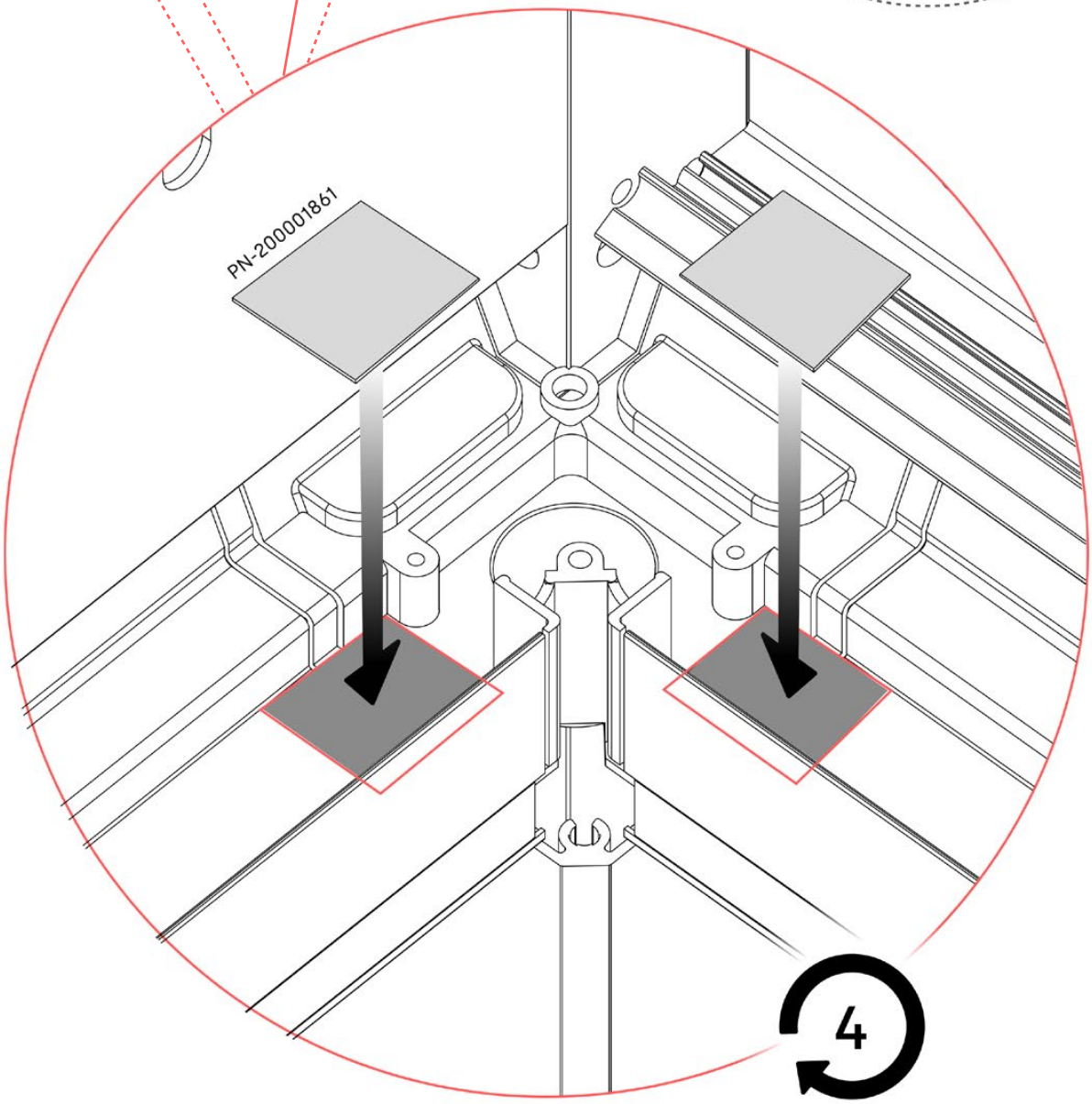

11

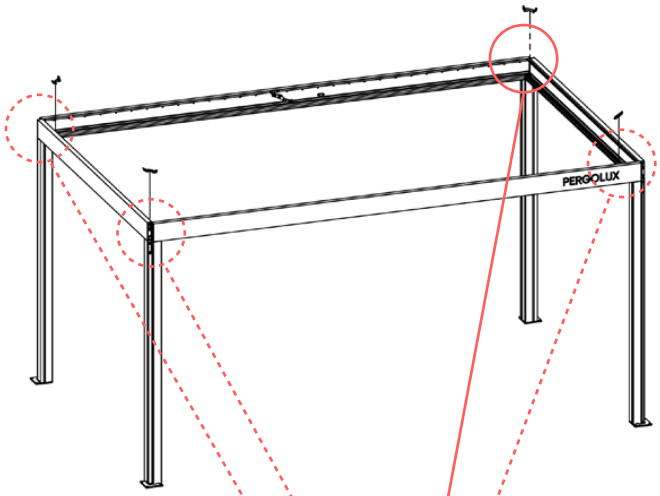
PERGOLUX

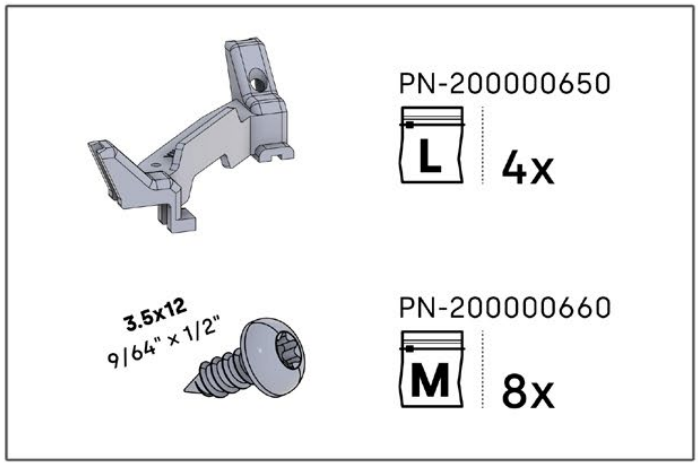
PN-200000650
L
4x
3.5x12
9/64" x 1/2"
PN-200000660
M
8x

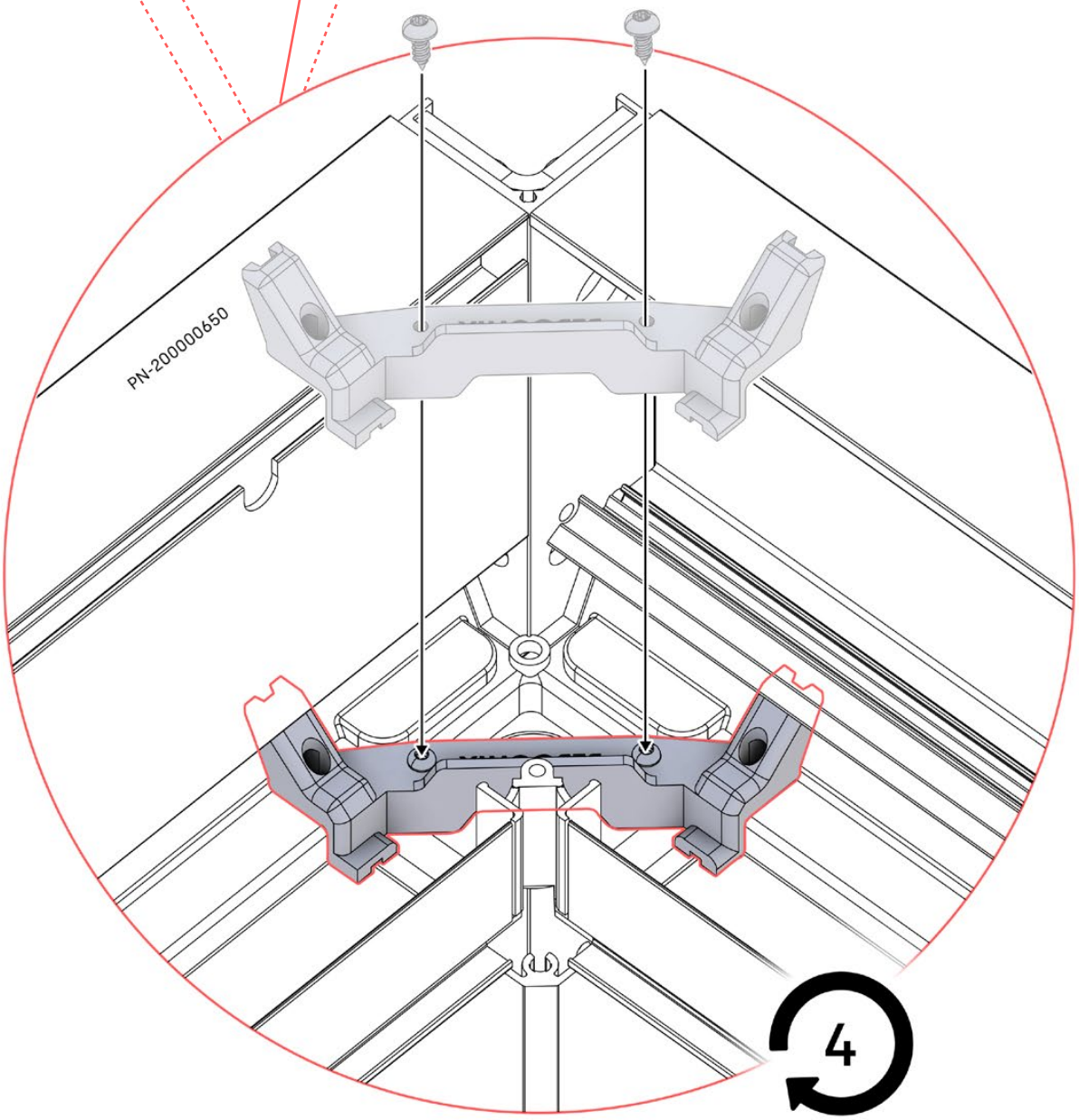
PN-200000650
4

12

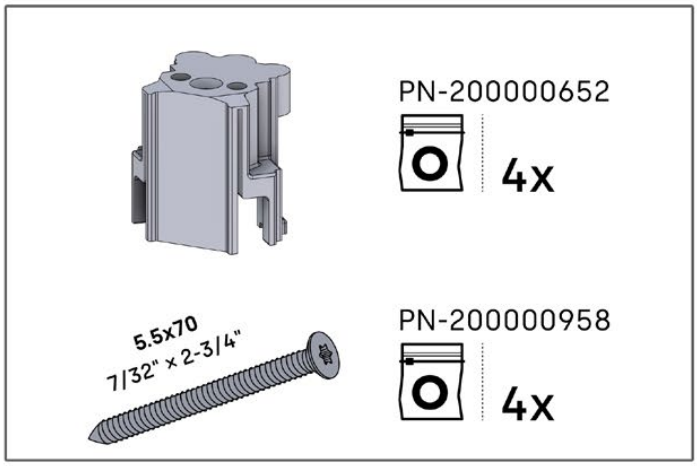
PN-200000652
4x
5.5x70
7/32" x 2-3/4"
PN-200000958
4x

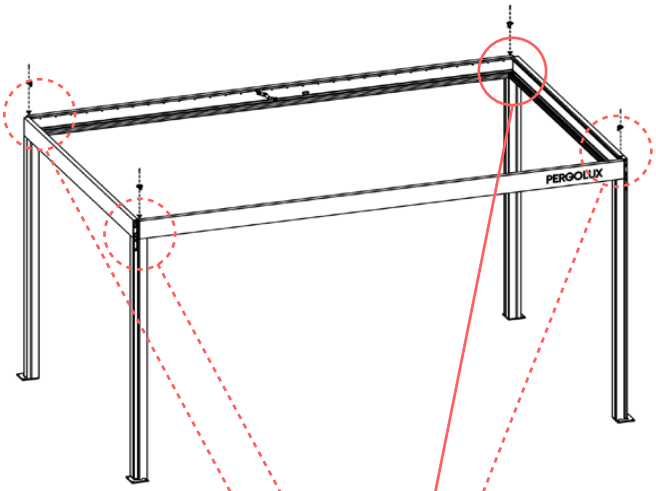
PERGOLUX

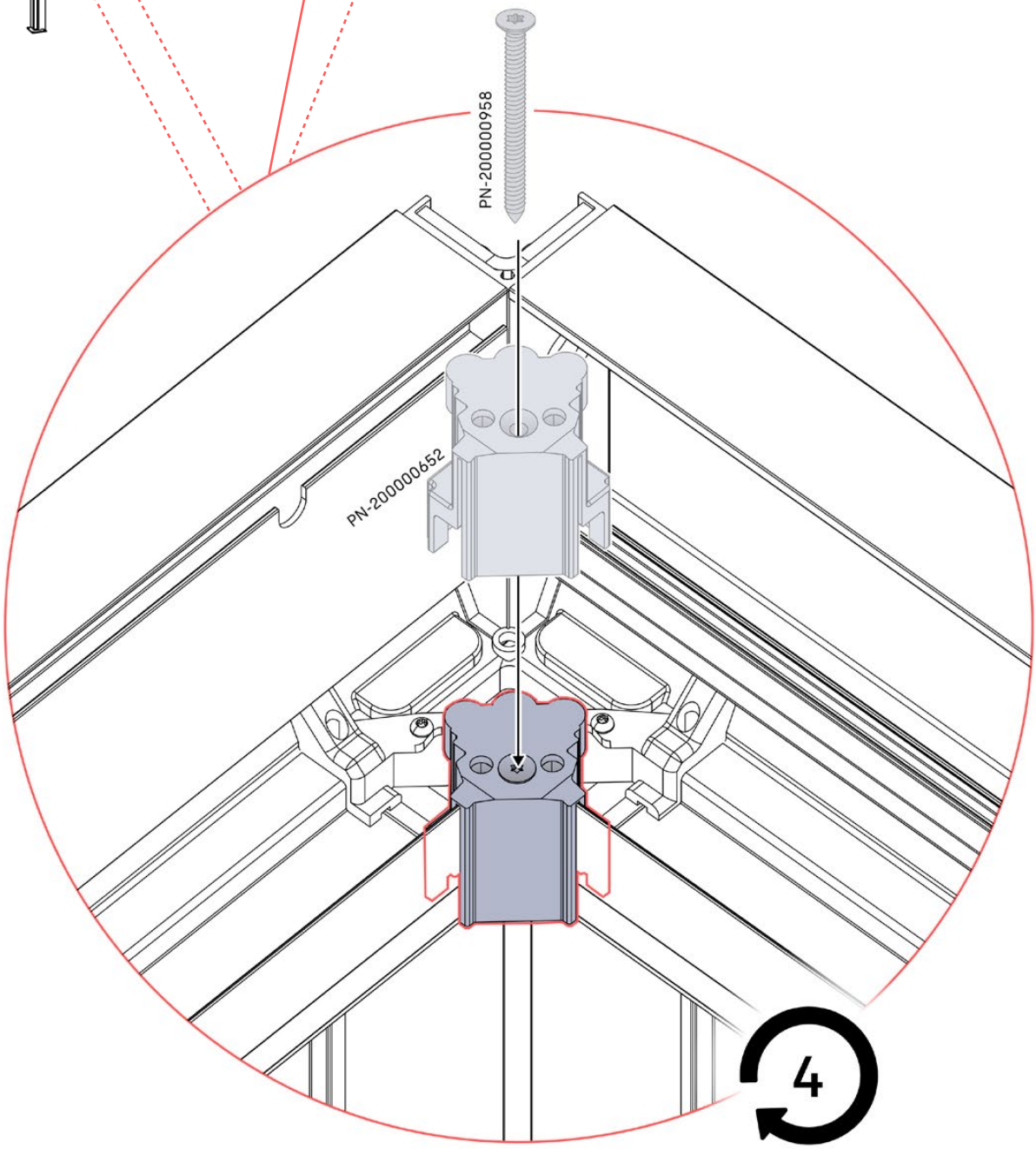
PN-200000958
PN-200000652
4

13

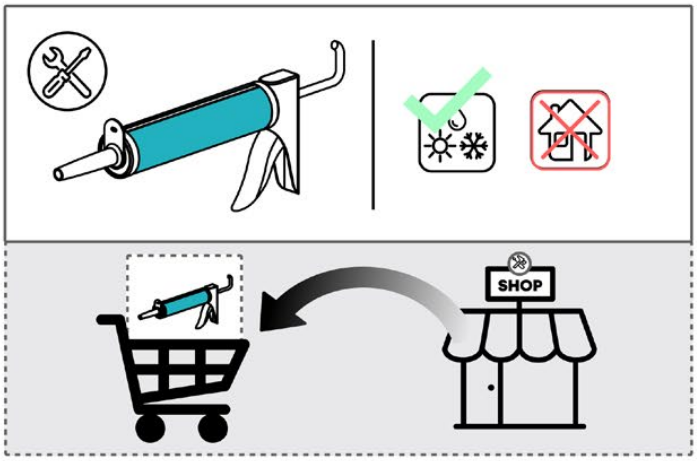
SHOP

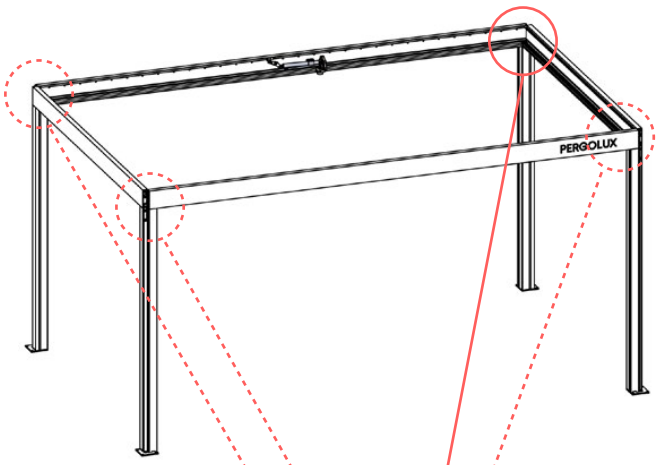
PERGOLUX

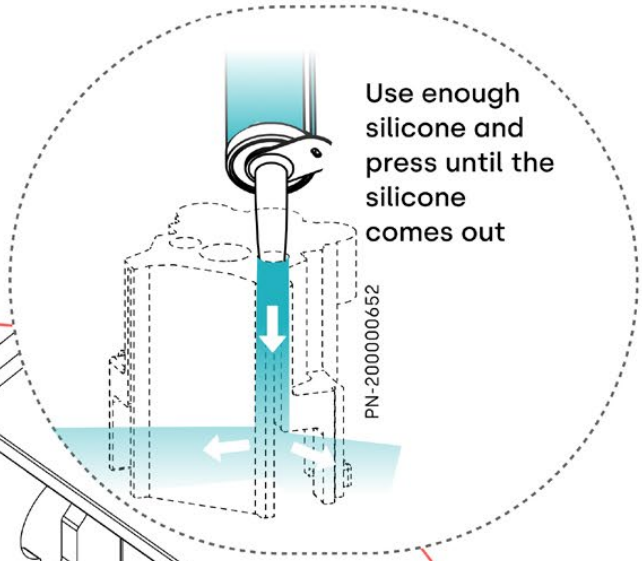
Use enough silicone and press until the silicone comes out
PN-200000652

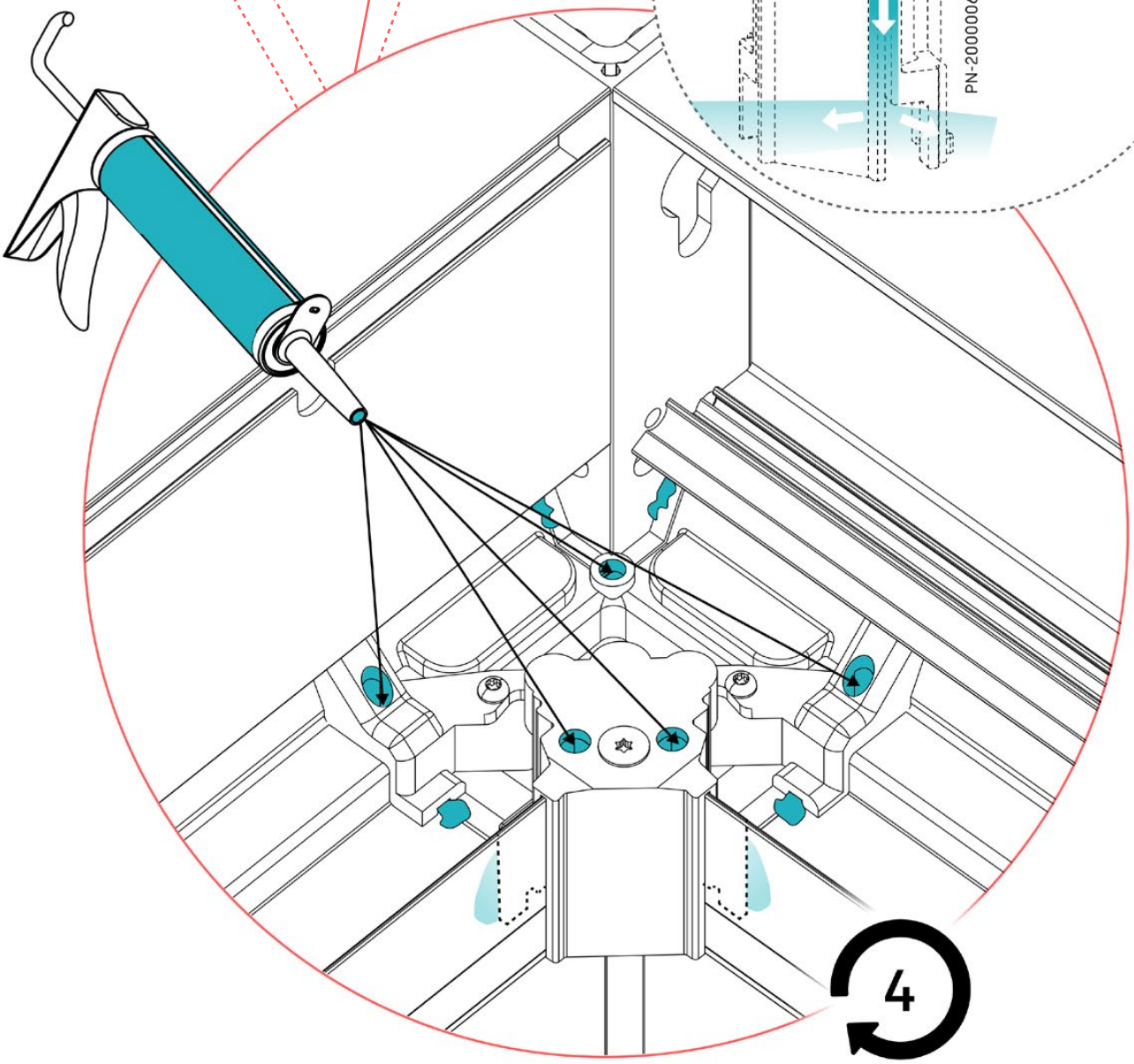
4

14

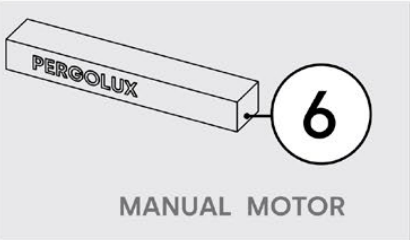

Manual motor
PN-200001563
1x

PN-200001623

1x

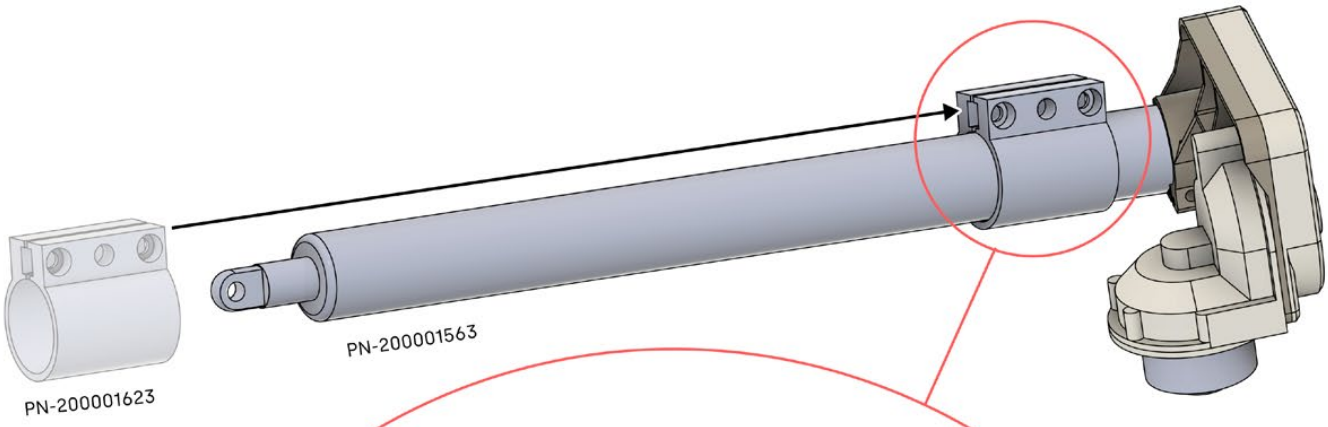

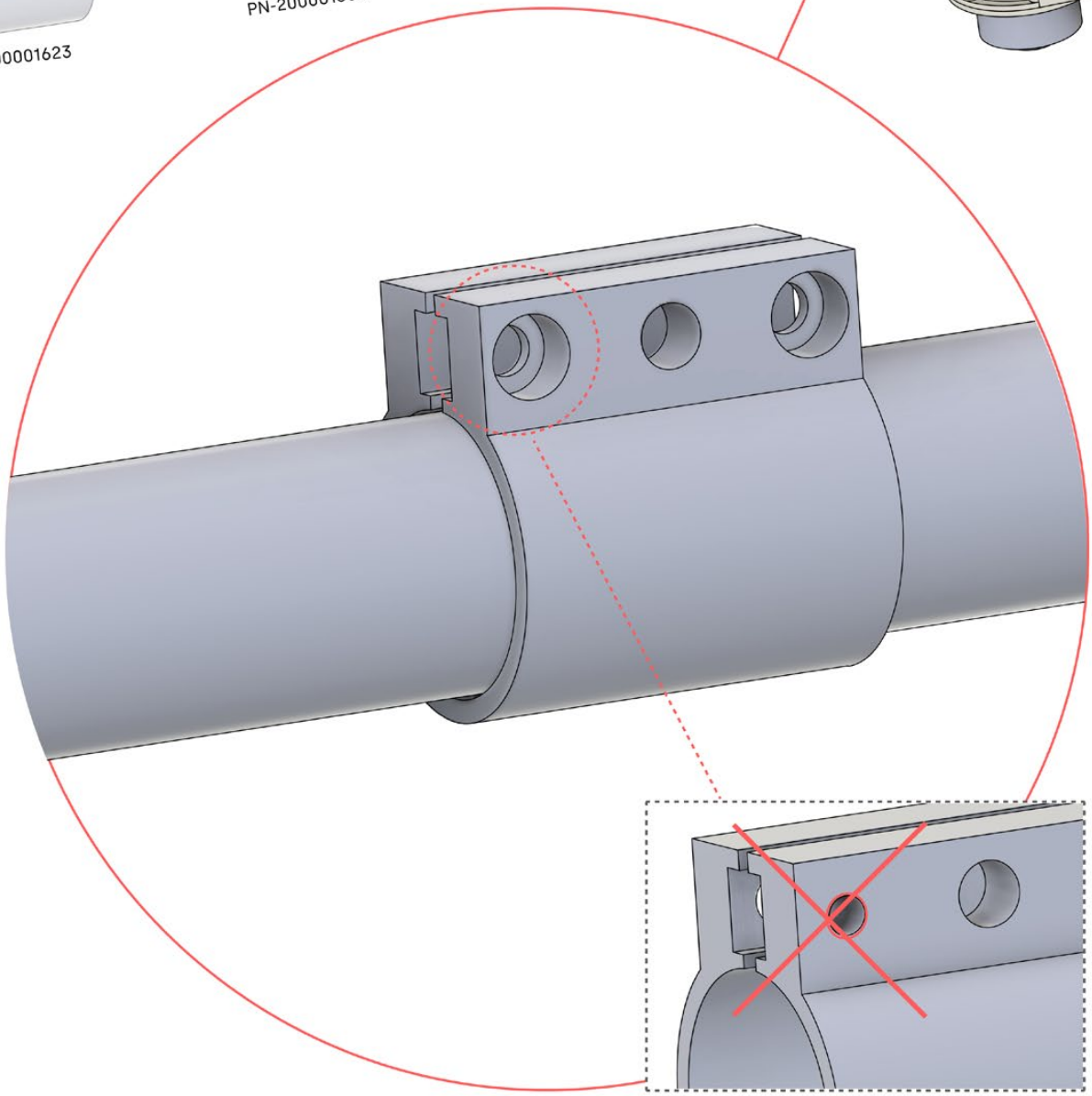

15

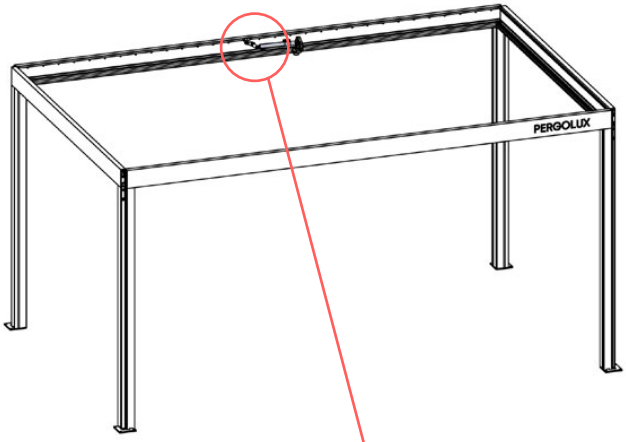

PN-200001623
PN-200001563
1x

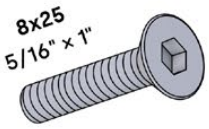

PN-200001334
T **1x**

PN-200000969
T **1x**

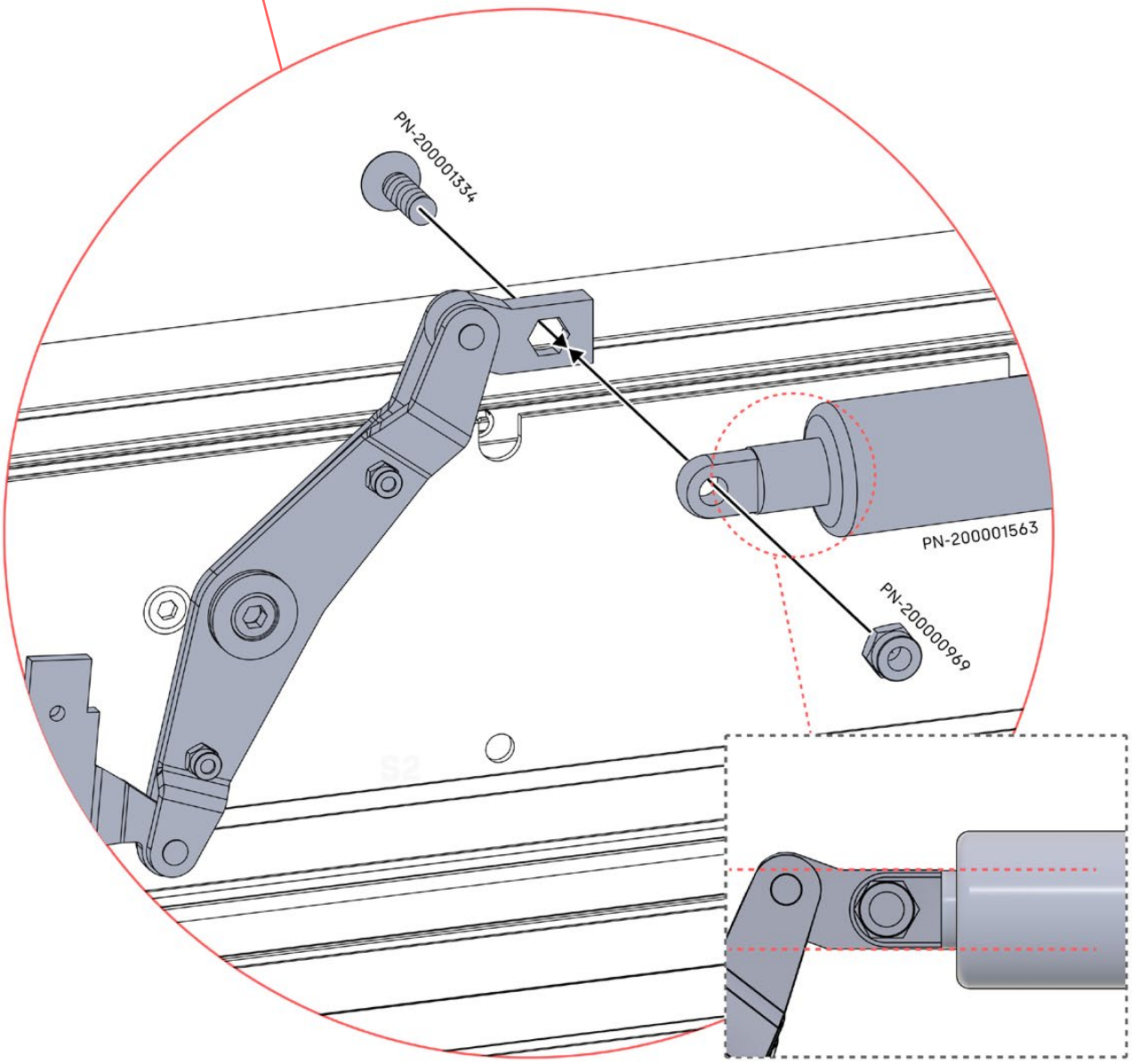

16

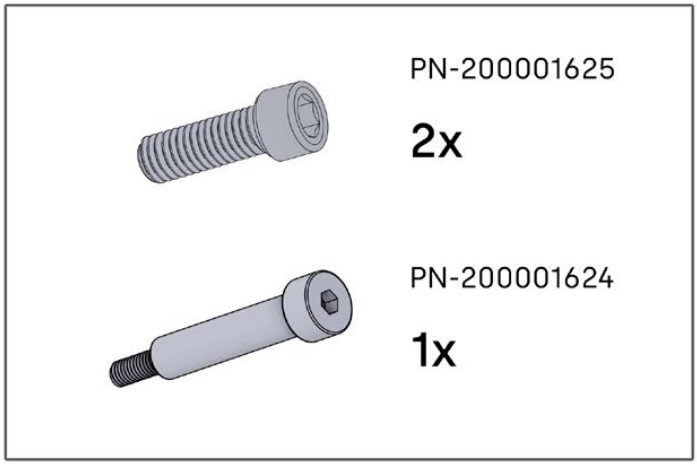
PN-200001625
2x
PN-200001624
1x

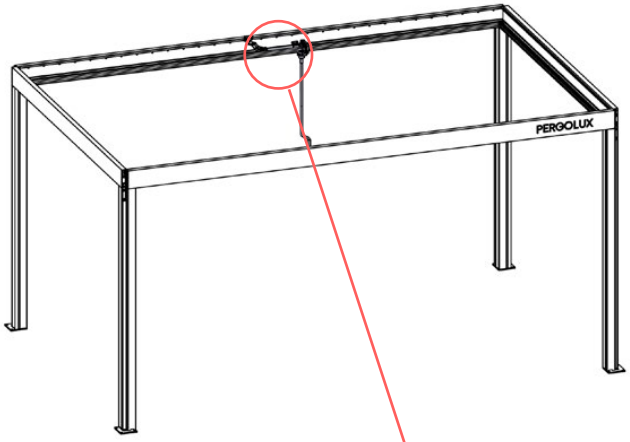
PERGOLUX

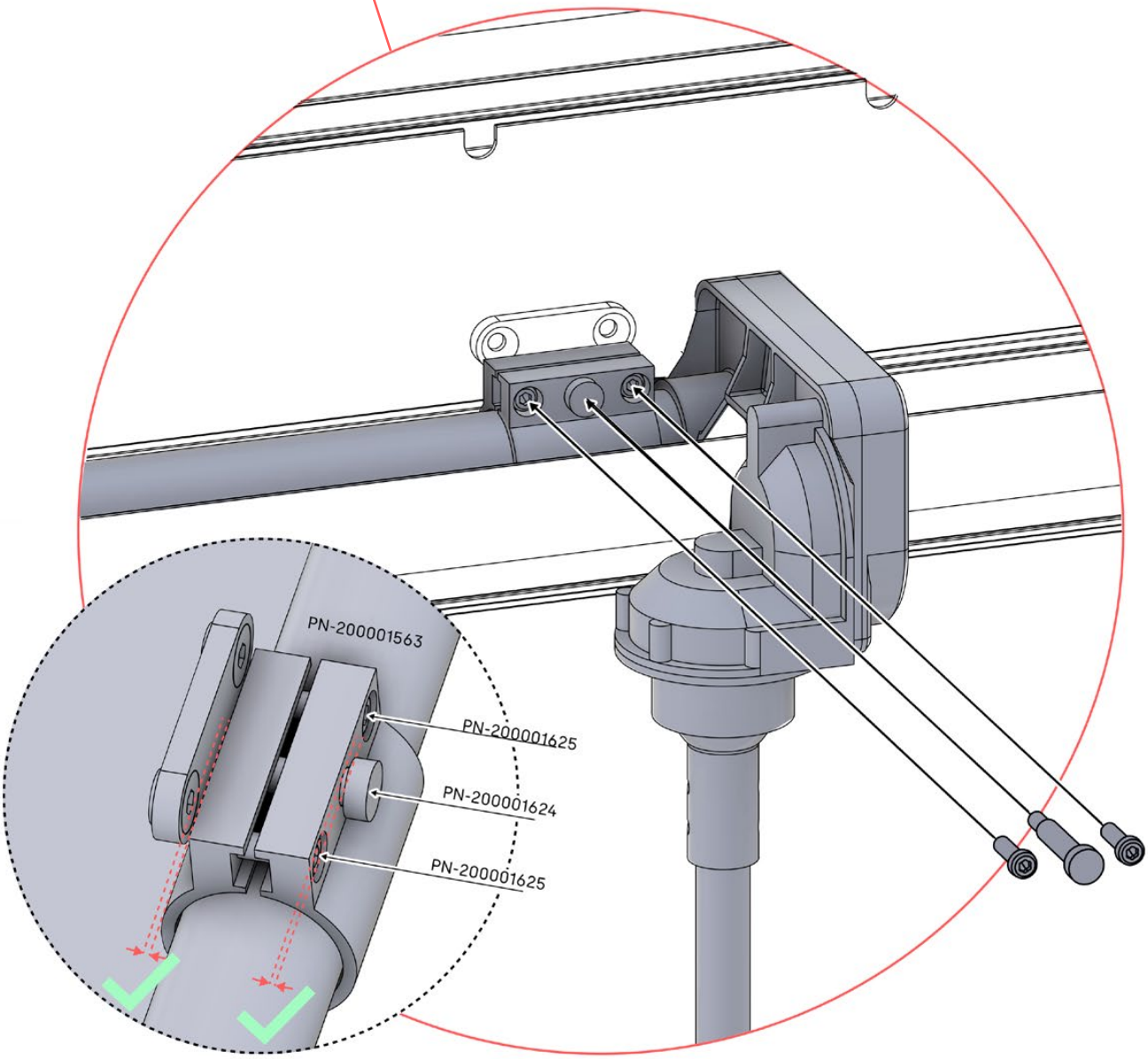
PN-200001563
PN-200001625
PN-200001624
PN-200001625

17

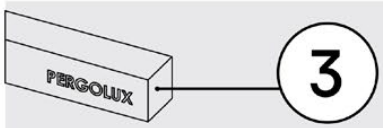

ANTHRACITE: B119
WHITE: B131

PN-200000707

2x

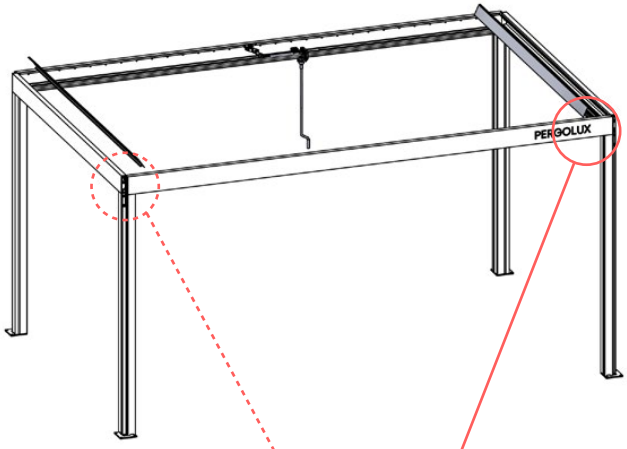

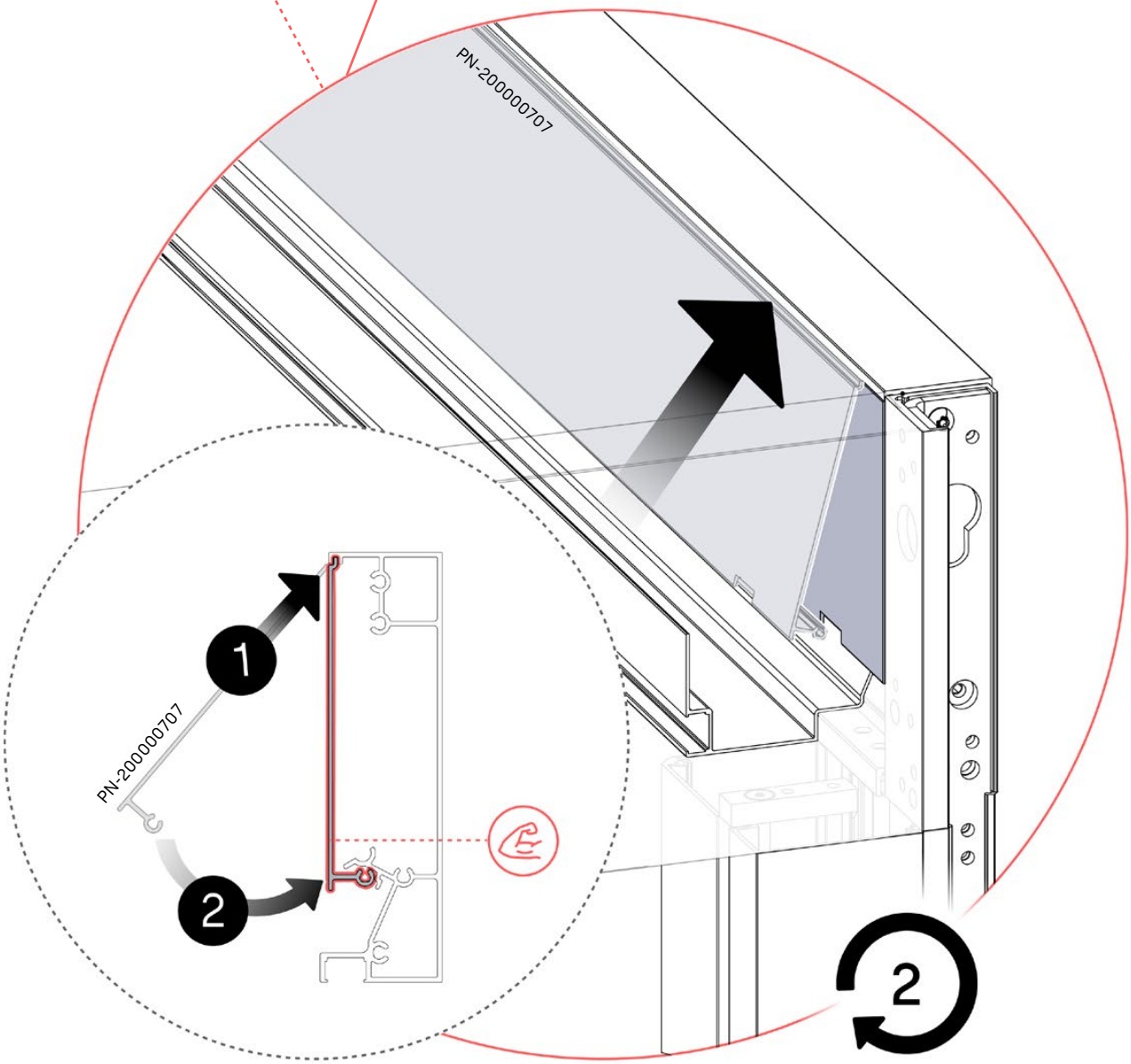

LOUVERS OVERVIEW

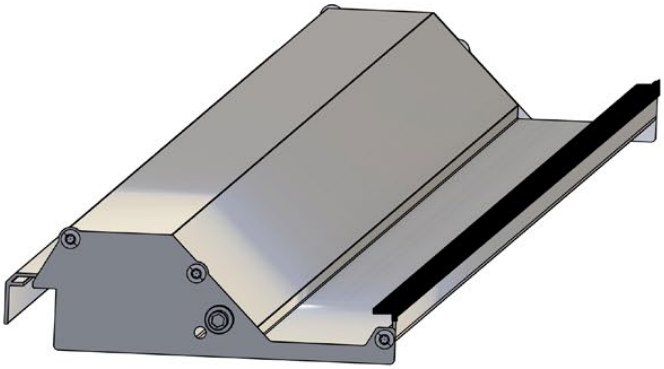

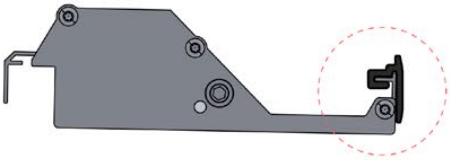

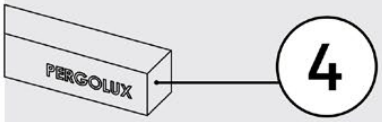

ANTHRACITE: L113
WHITE: L125

3M FS END LOUVER
PN-200000718

1x

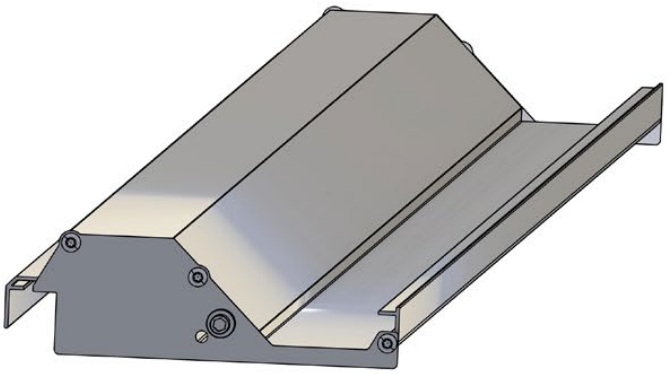

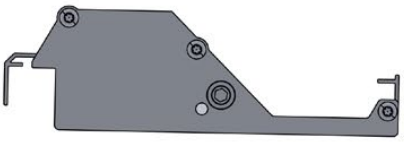

Standard

ANTHRACITE: L112
WHITE: L124

3M FS LOUVER
PN-200000717

30x

18

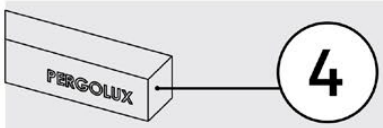

ANTHRACITE: L113
WHITE: L125

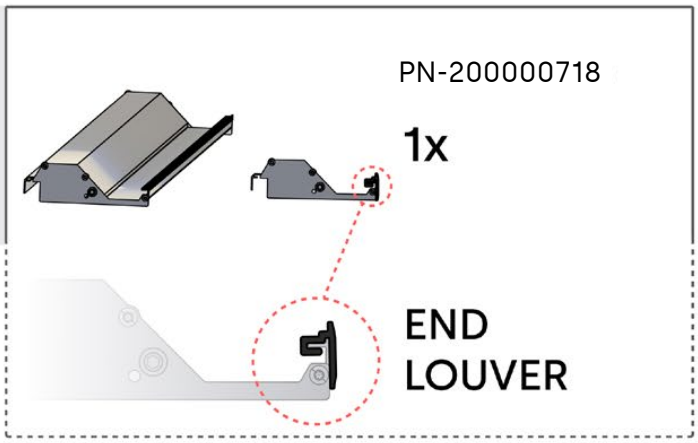

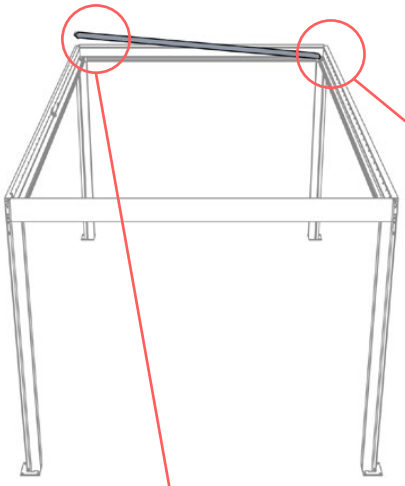

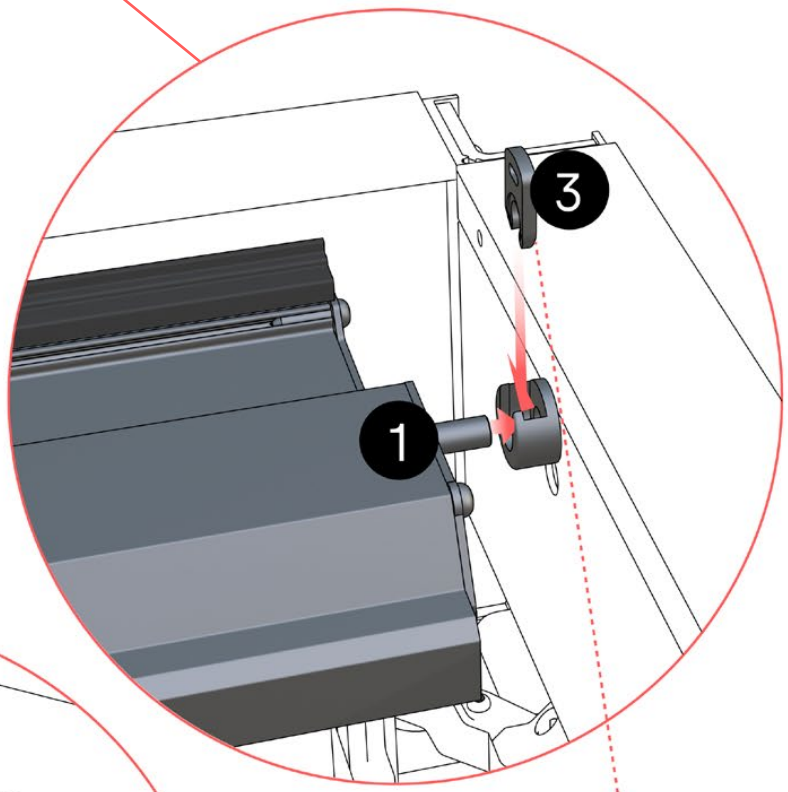

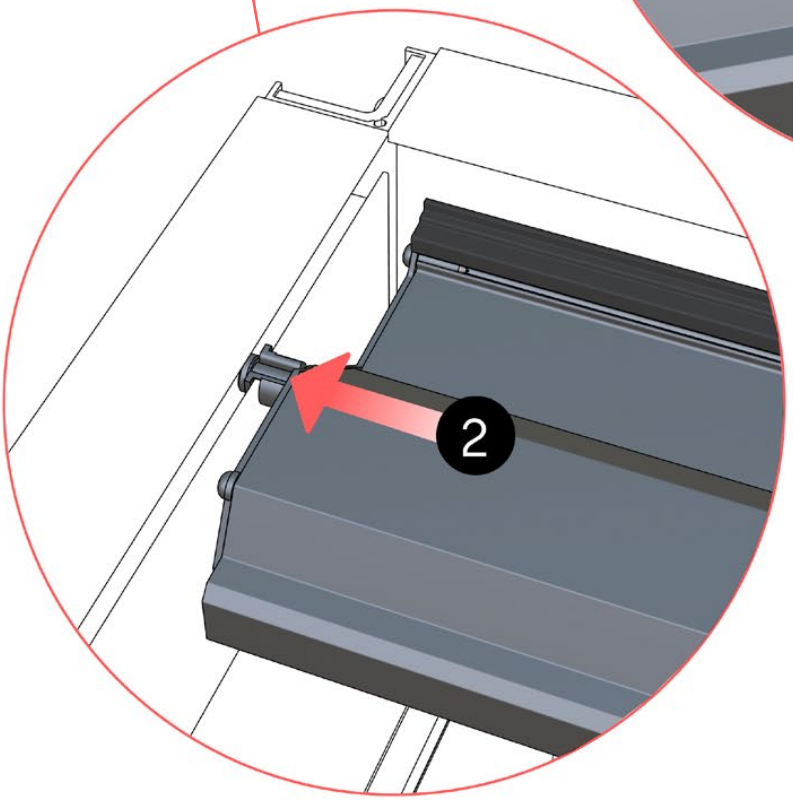

See next page

19

PN-200000677

H 1x

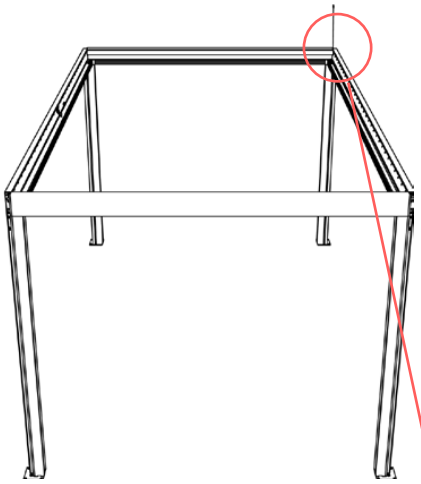

Important:
Place one clip (PN-200000677) immediately after each installment of louver.

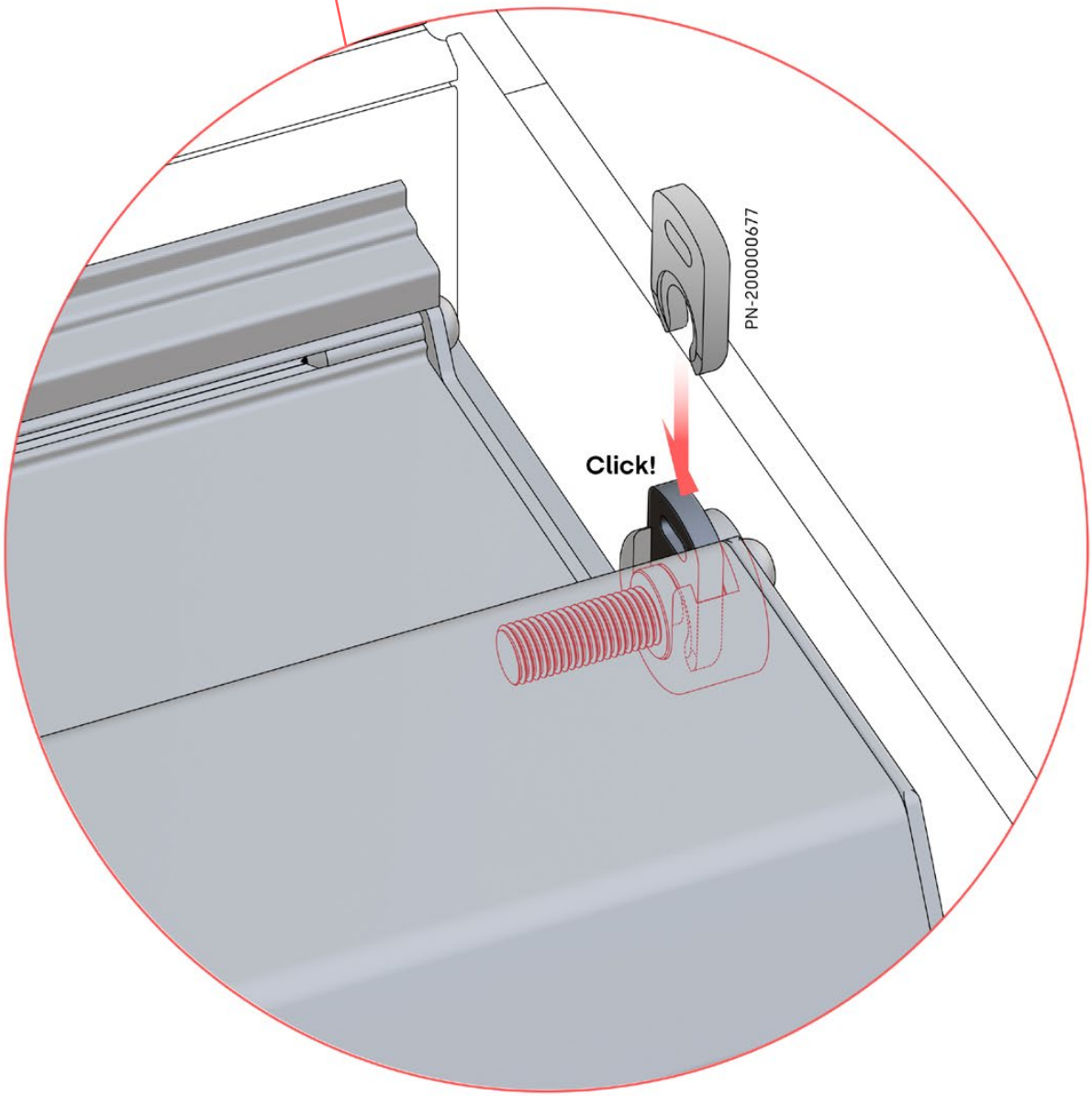

20

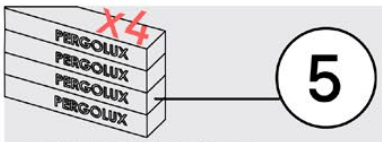

5

ANTHRACITE: L112
WHITE: L124

PN-200000717

21x

PN-200000677

H 21x

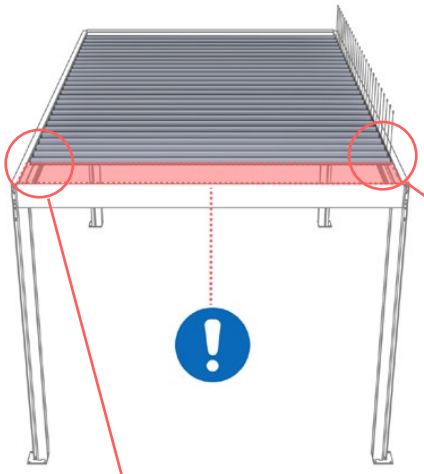

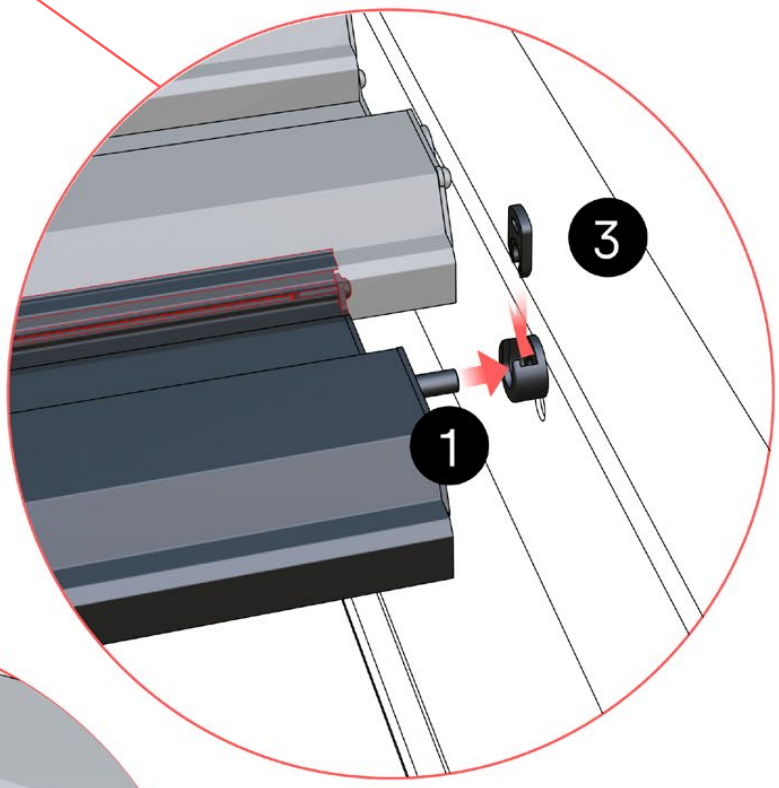

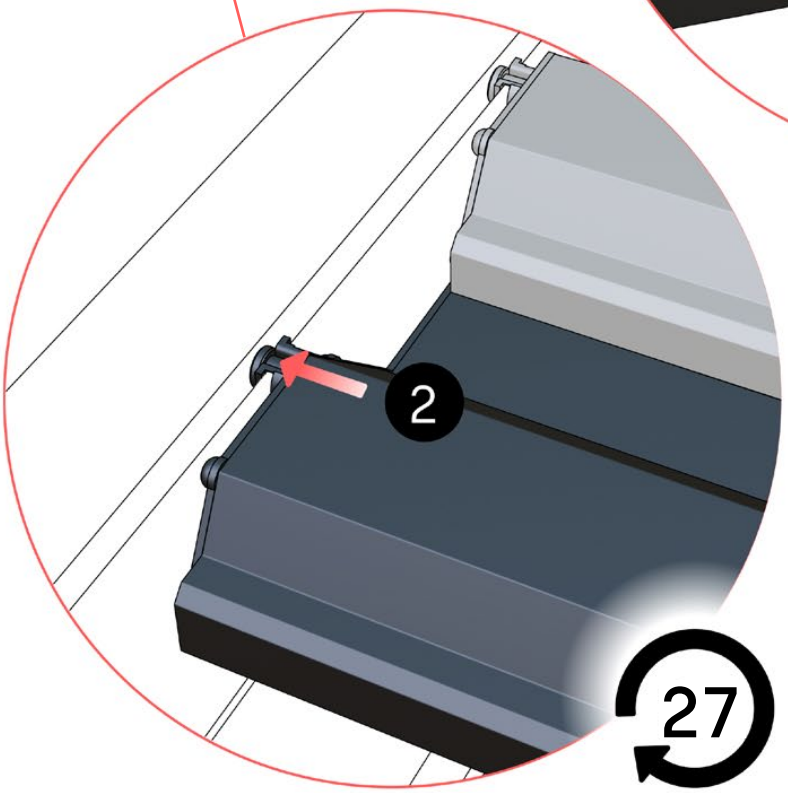

21

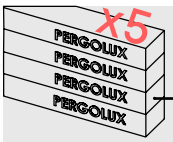

5

ANTHRACITE: L112
WHITE: L124

PN-200000717

3x

PN-200000677

H 3x

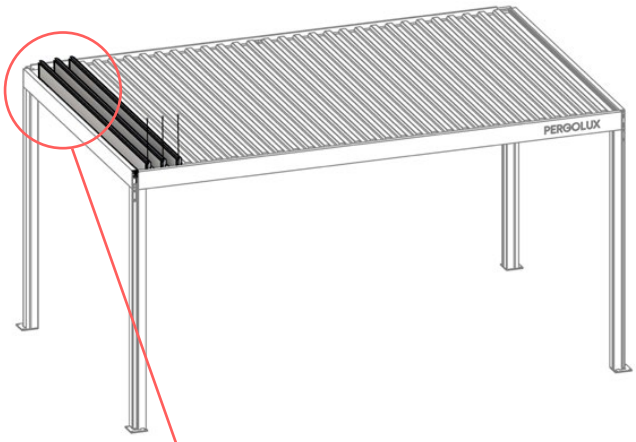

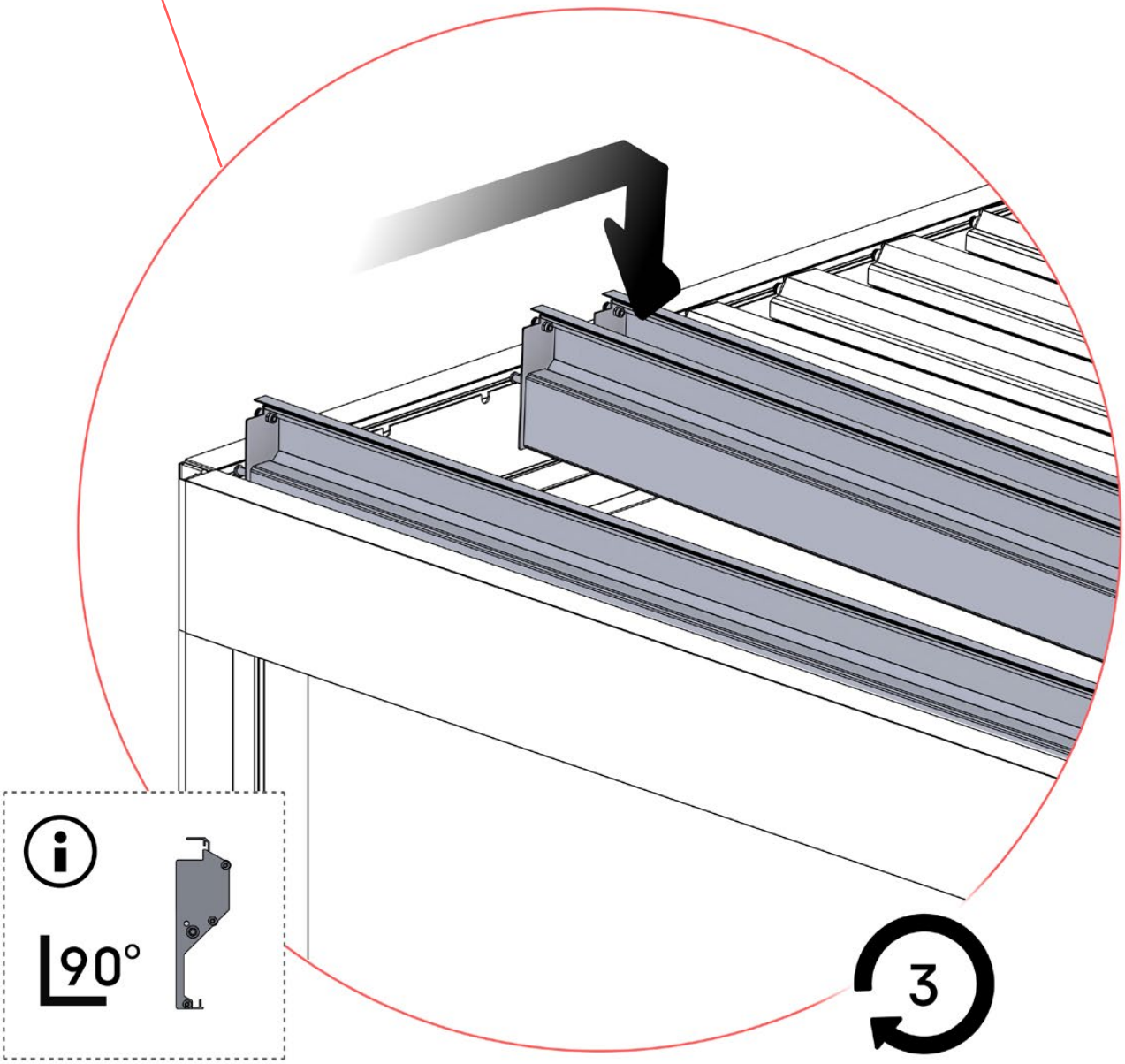

22

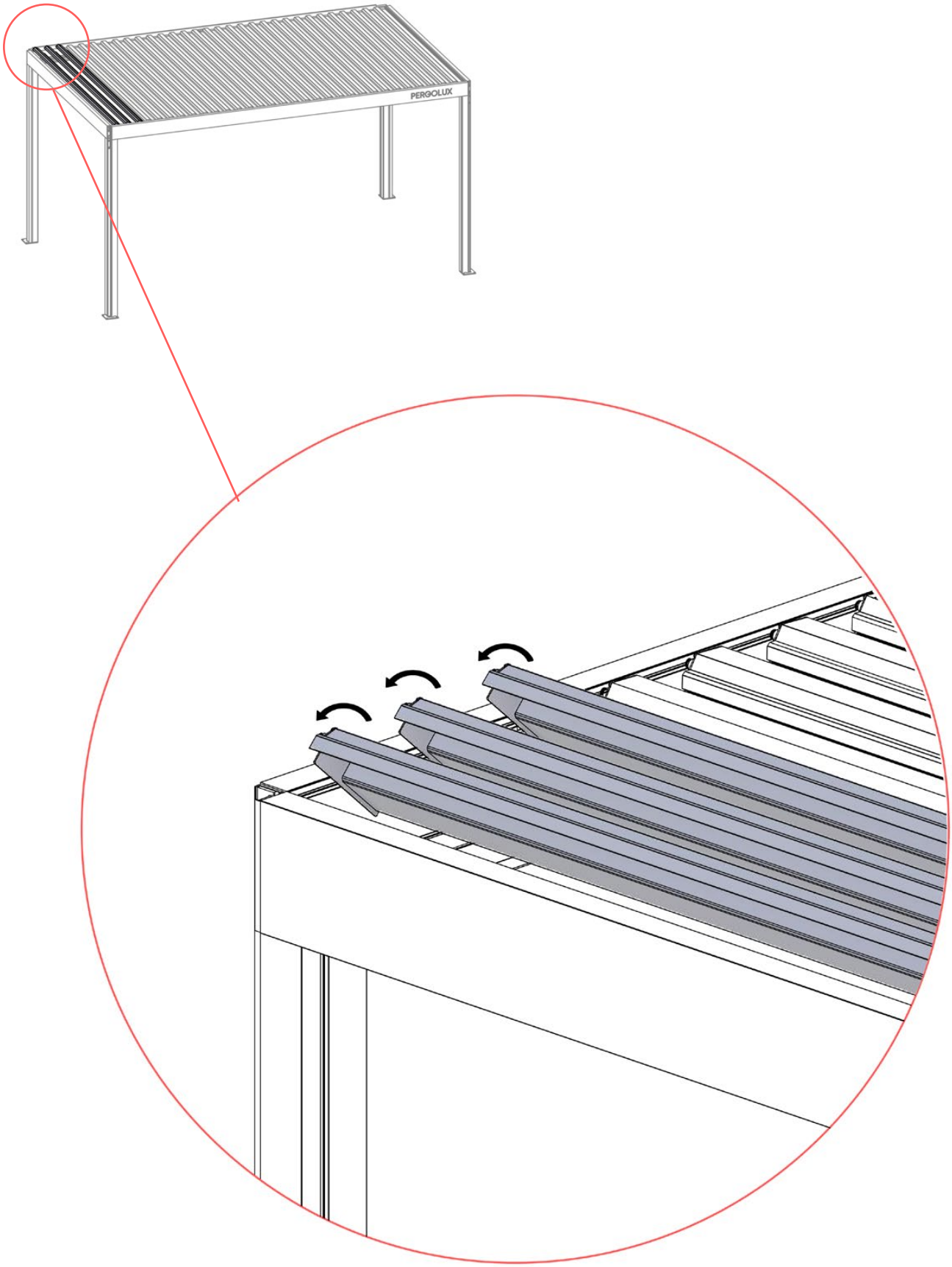

23

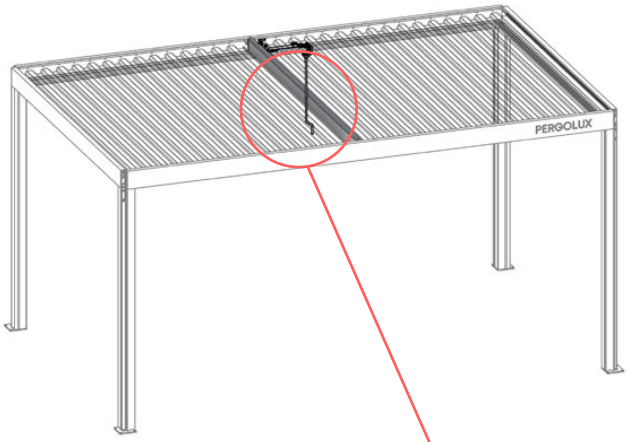

Hand Crank

Adjust motor to prepare for assembly on step 24

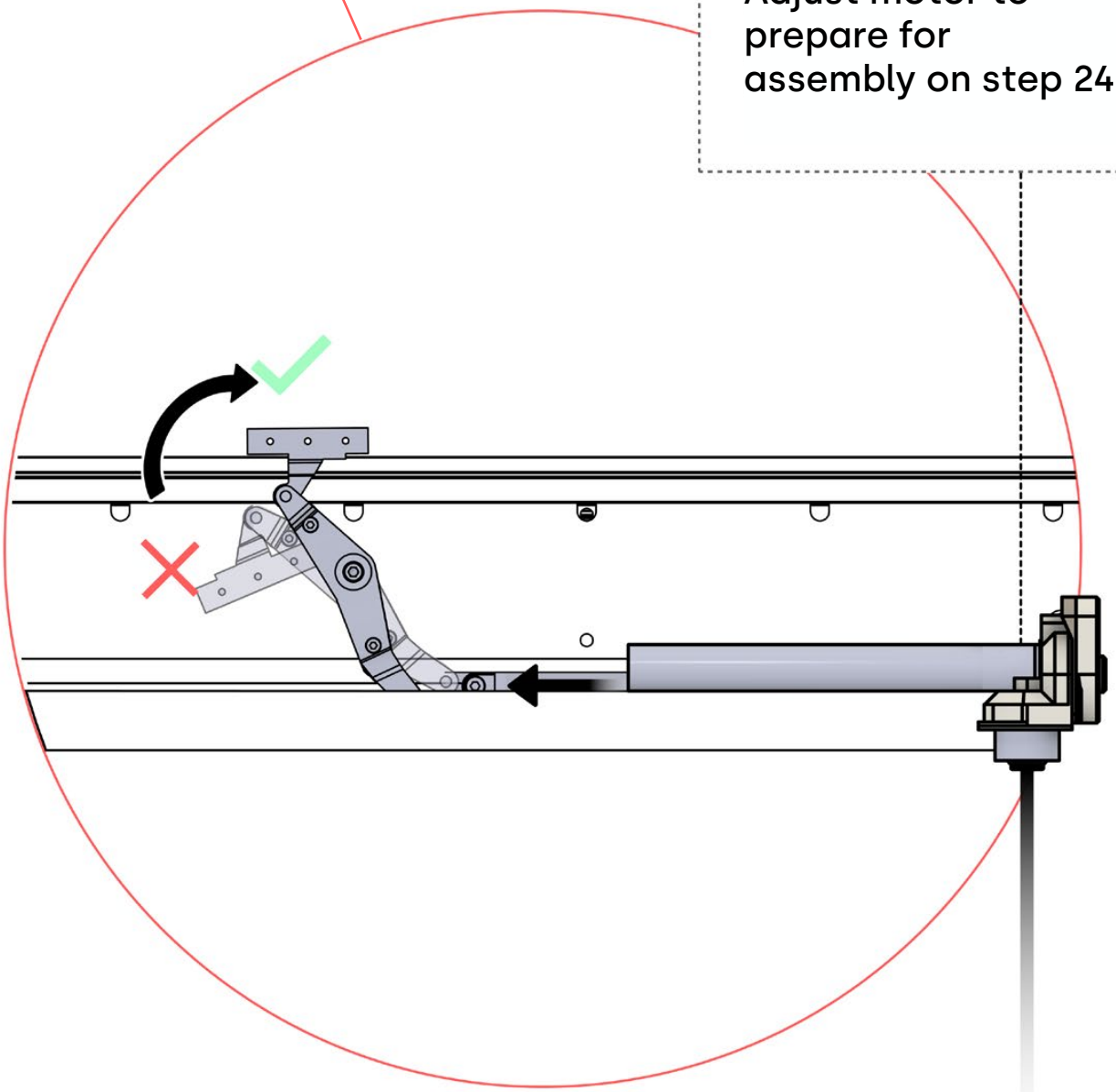

24

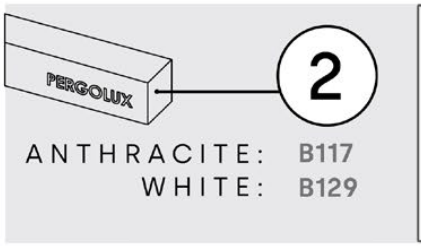
PERGOLUX
2
ANTHRACITE: B117
WHITE: B129

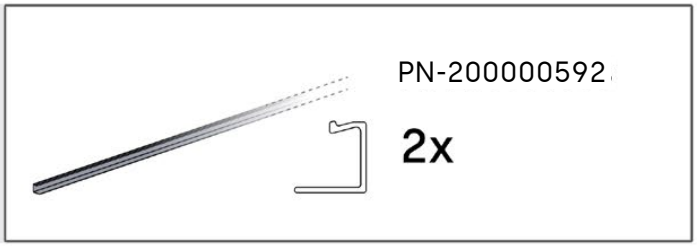
PN-200000592
2x

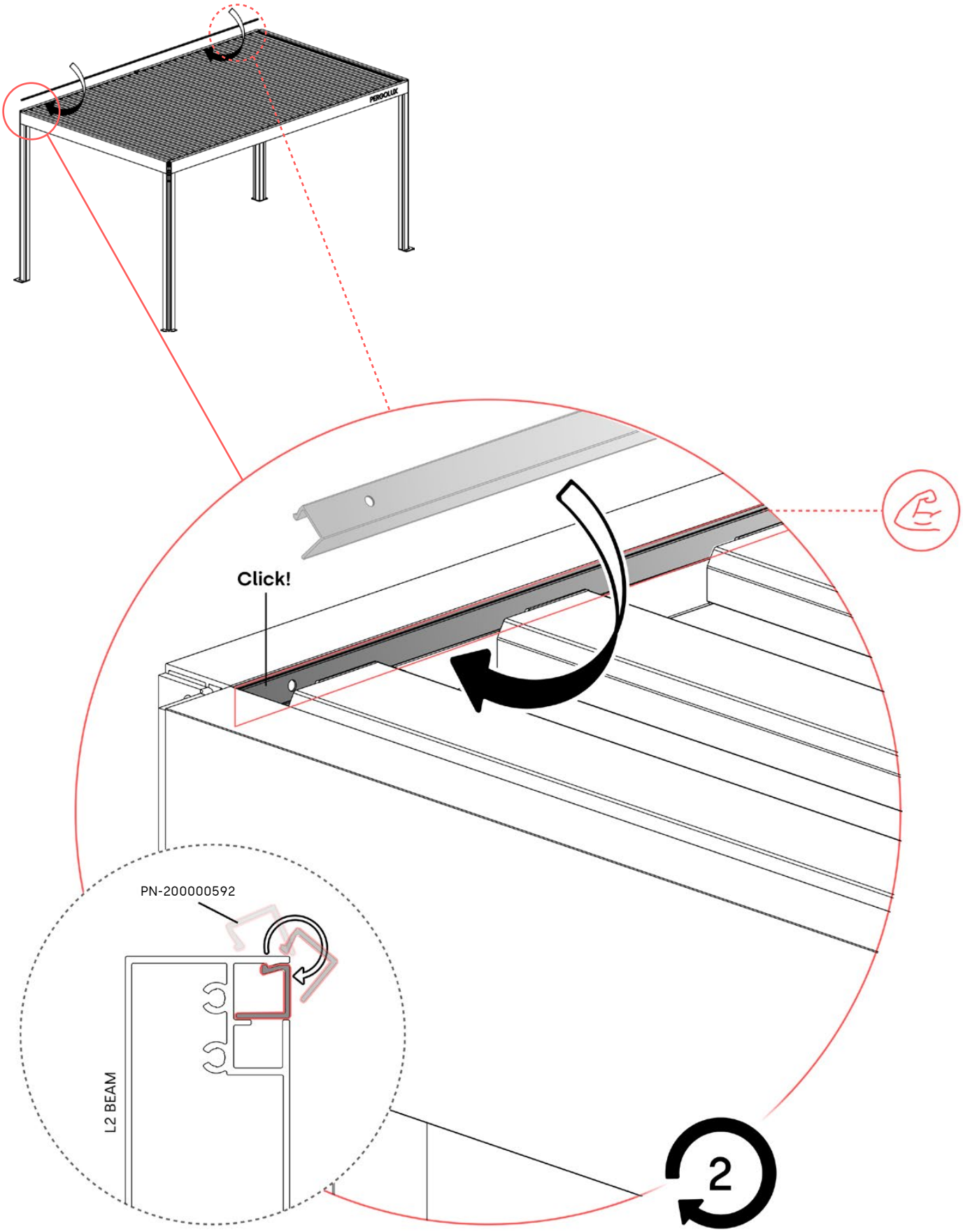
PERGOLUX
Click!
PN-200000592
L2 BEAM
2

25

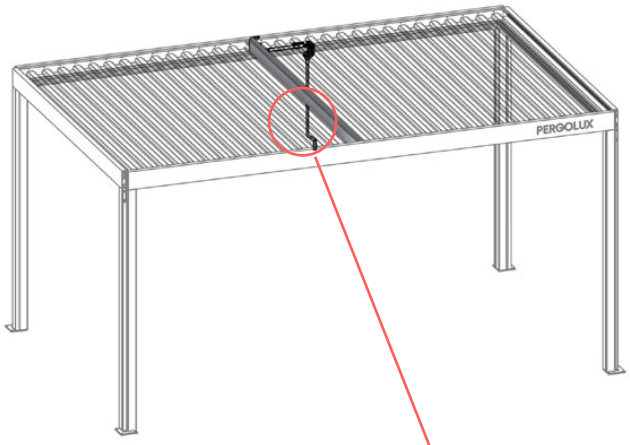

Adjust motor to prepare for assembly on step 26

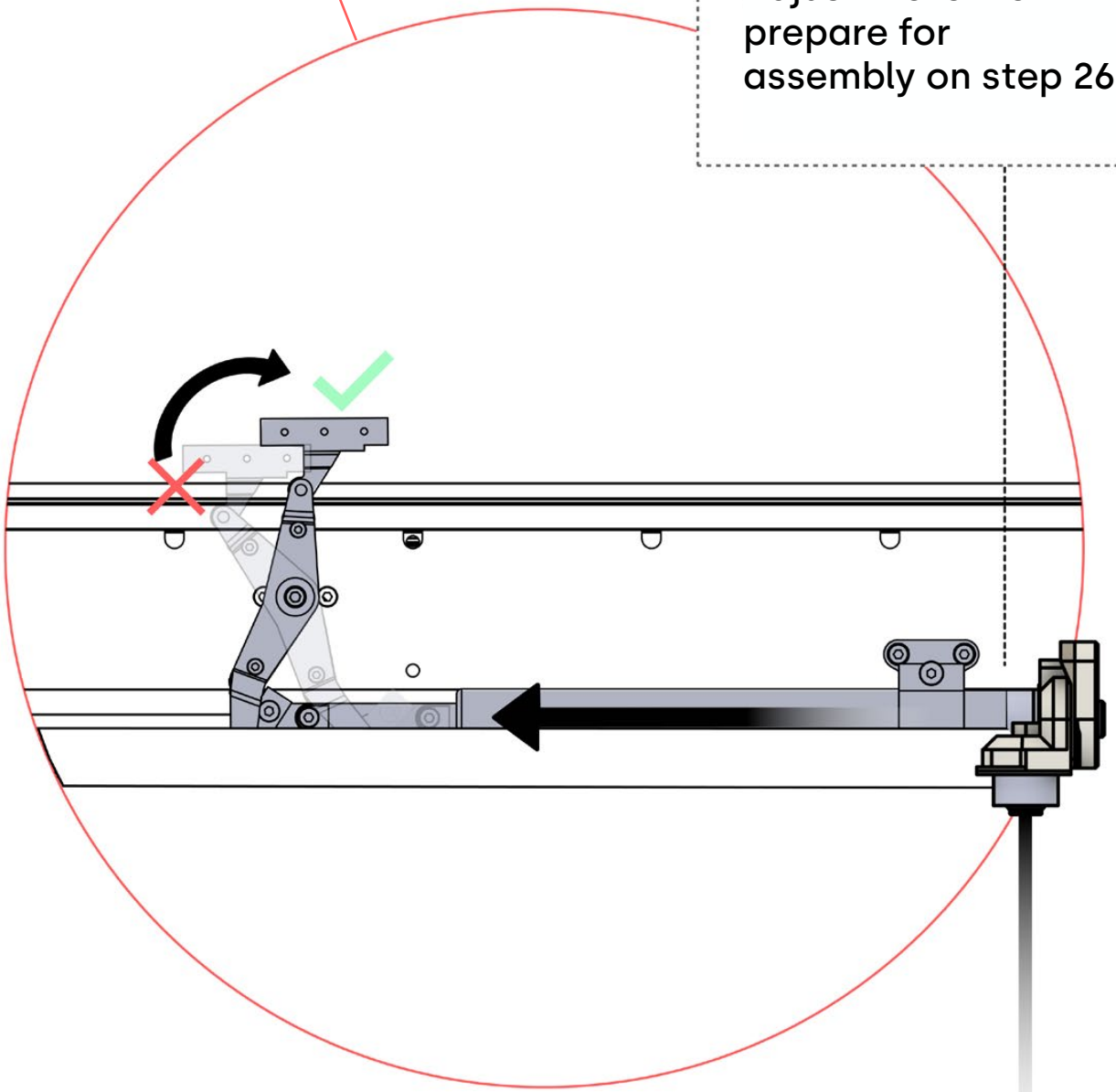

26

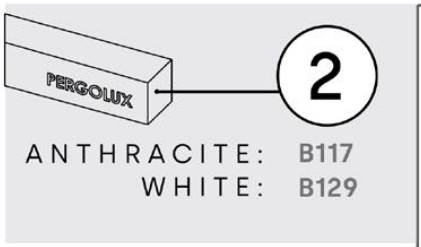
PERGOLUX
2
ANTHRACITE: B117
WHITE: B129

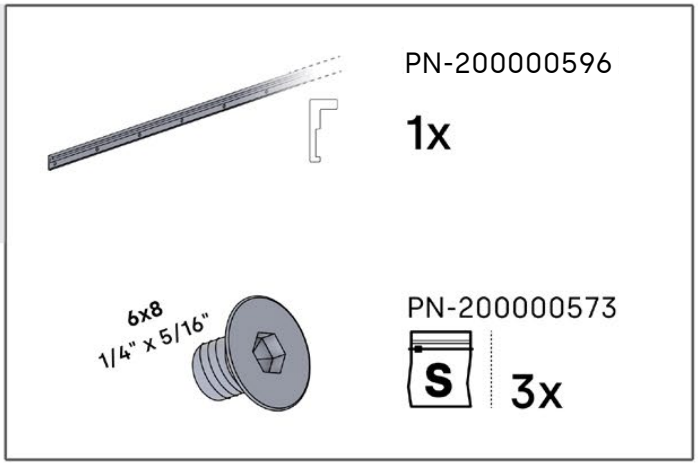
PN-200000596
1x
6x8
1/4" x 5/16"
PN-200000573
S
3x

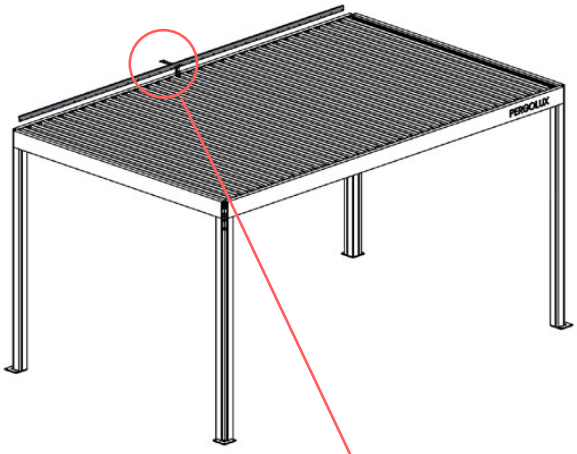
PERGOLUX

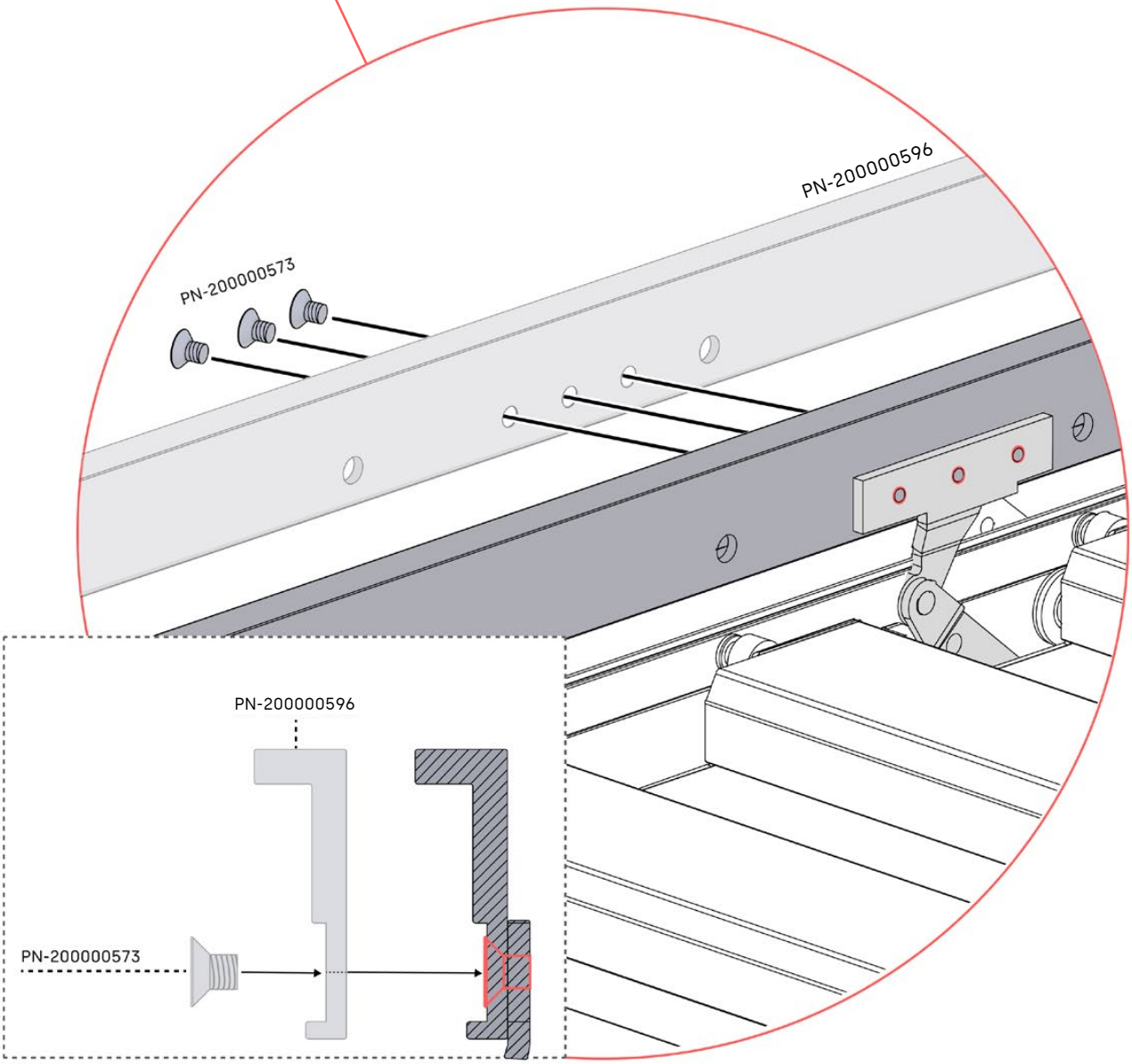
PN-200000596
PN-200000573
PN-200000596
PN-200000573

27

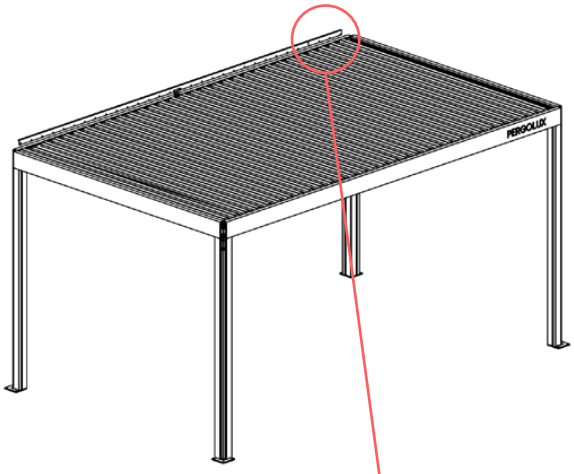
PERGOLUX

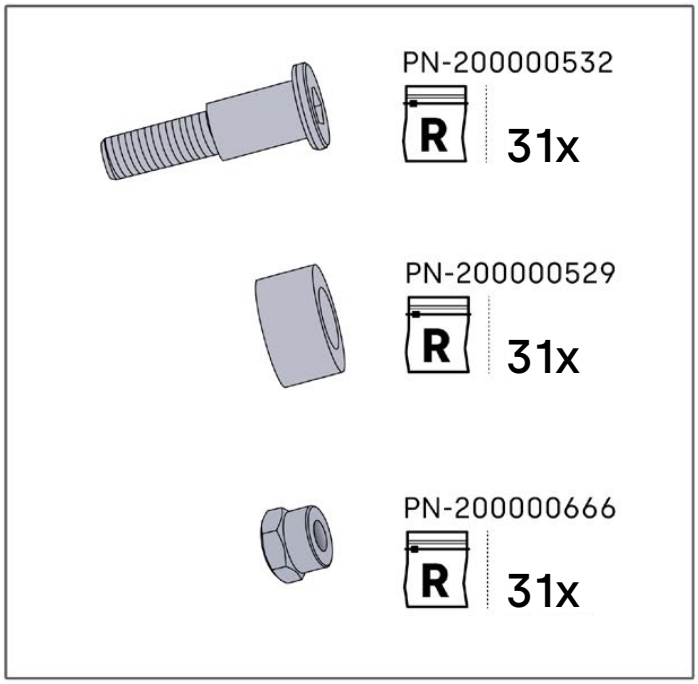
PN-200000532
R
31x
PN-200000529
R
31x
PN-200000666
R
31x

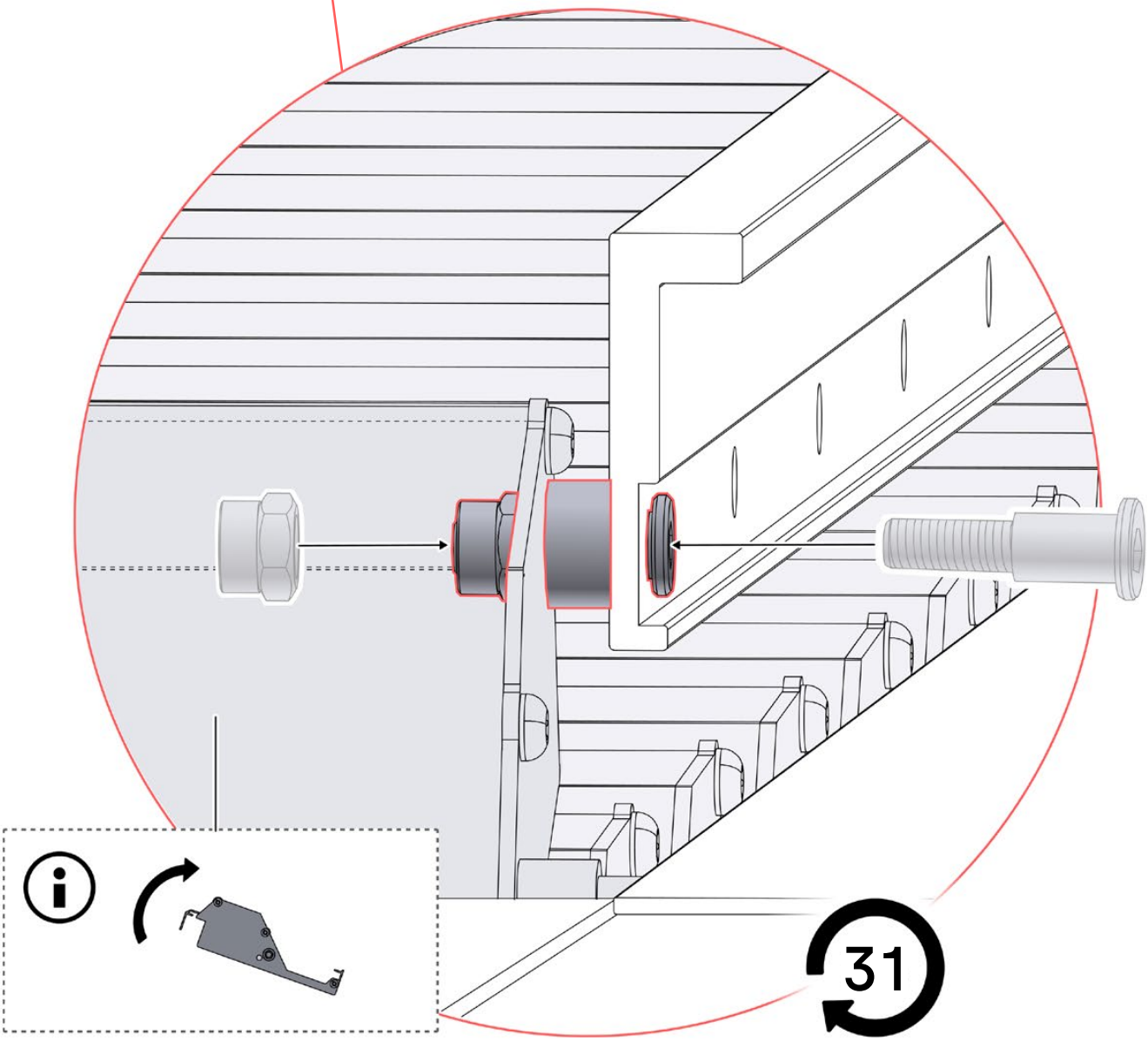
31

28

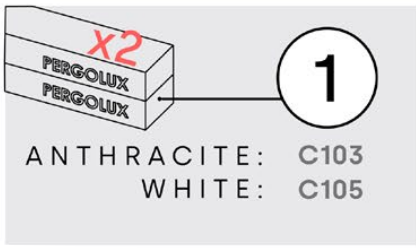
x2
PERGOLUX
PERGOLUX
1
ANTHRACITE: C103
WHITE: C105

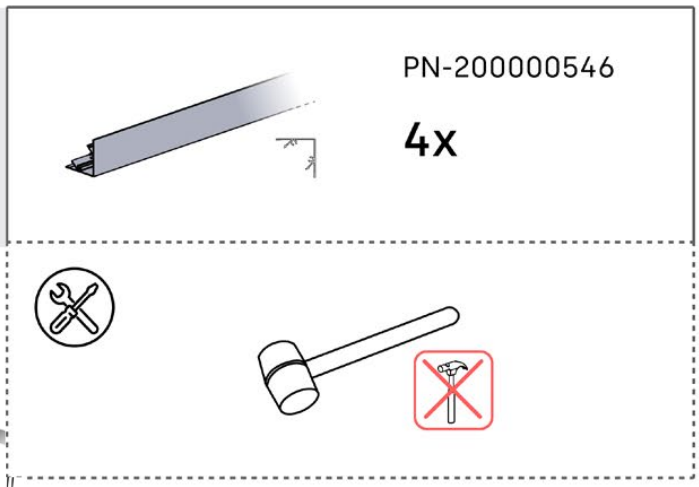
PN-200000546
4x

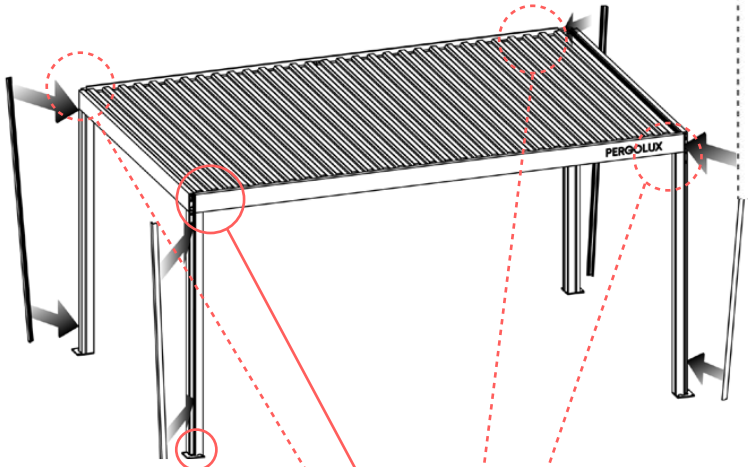
PERGOLUX

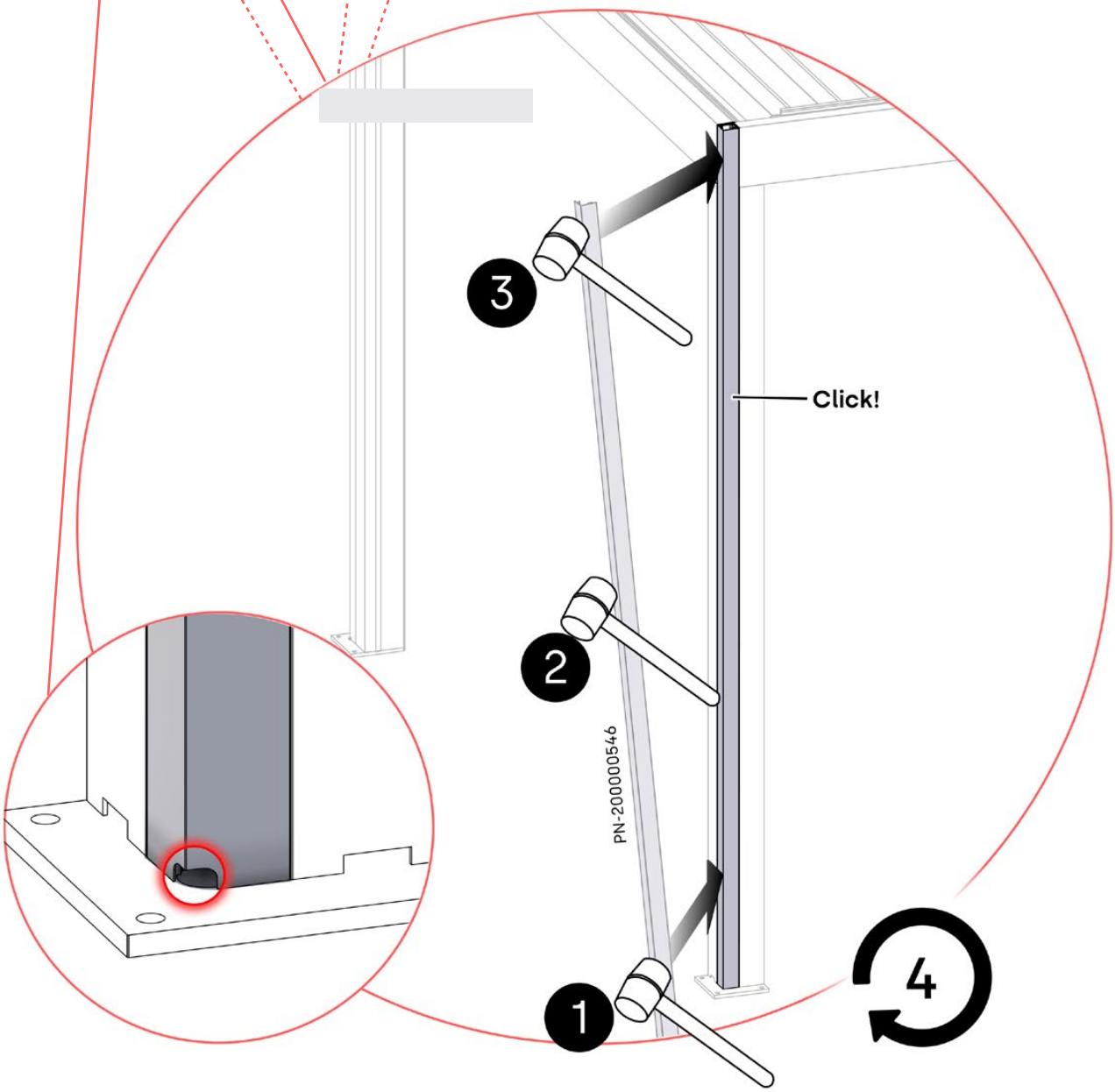
3
Click!
2
PN-200000546
1
4

29

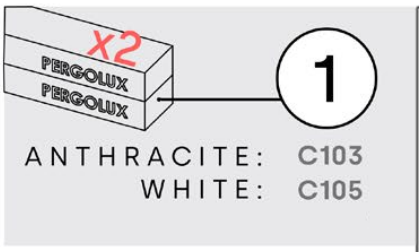
x2
PERGOLUX
PERGOLUX
1
ANTHRACITE: C103
WHITE: C105

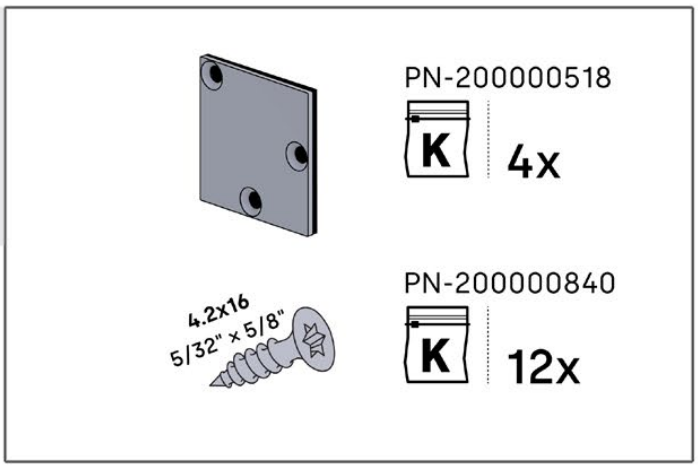
PN-200000518
K
4x
4.2x16
5/32" x 5/8"
PN-200000840
K
12x

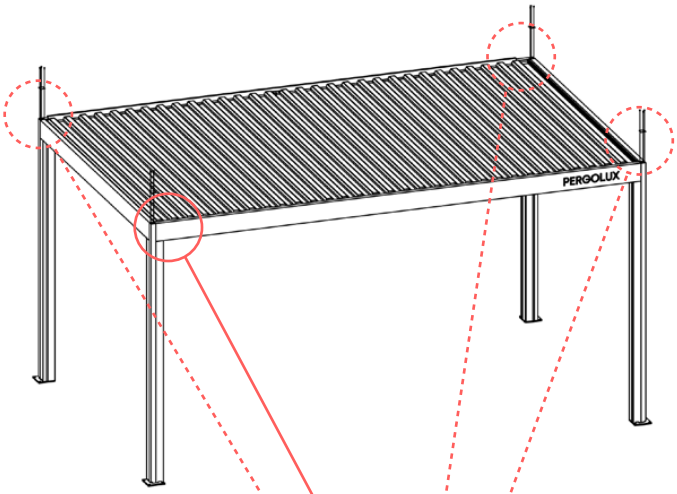
PERGOLUX

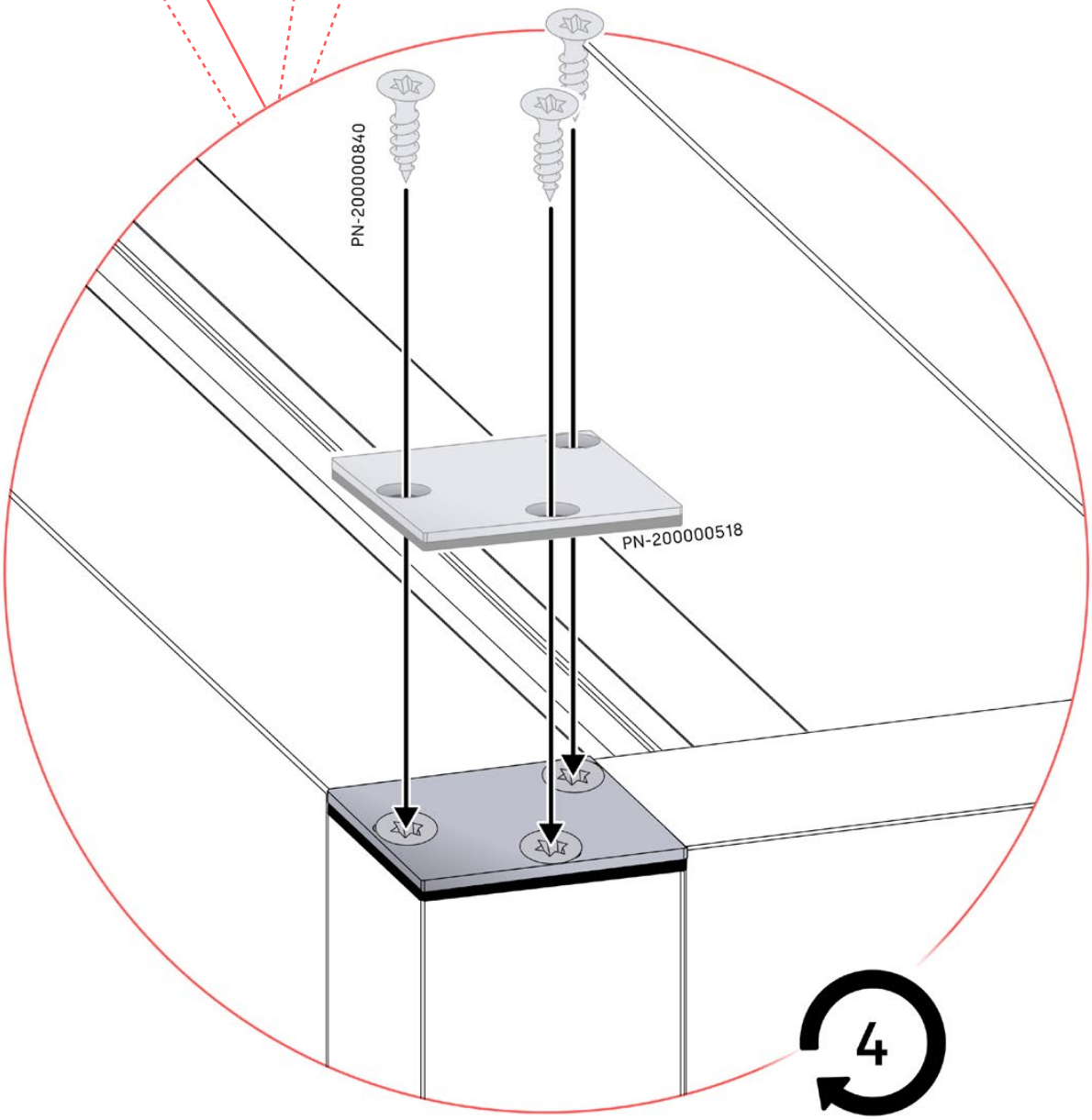
PN-200000840
PN-200000518
4

30

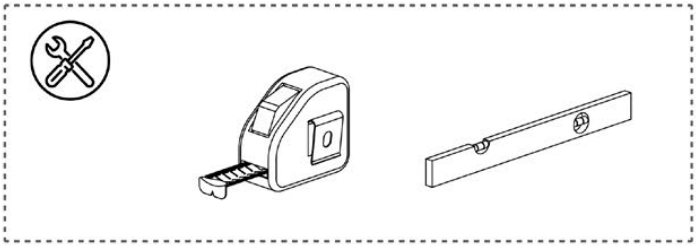

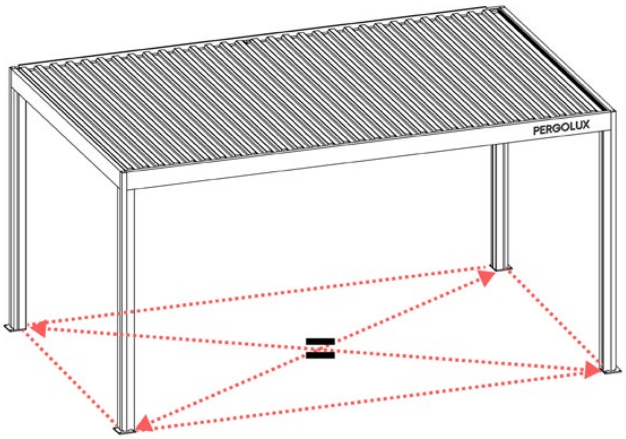

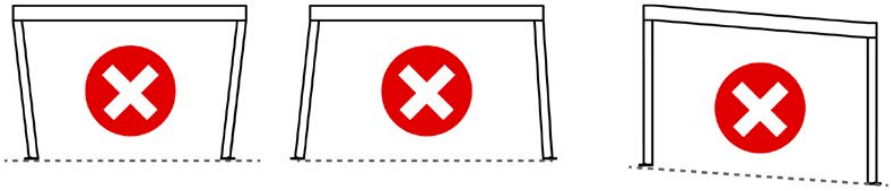

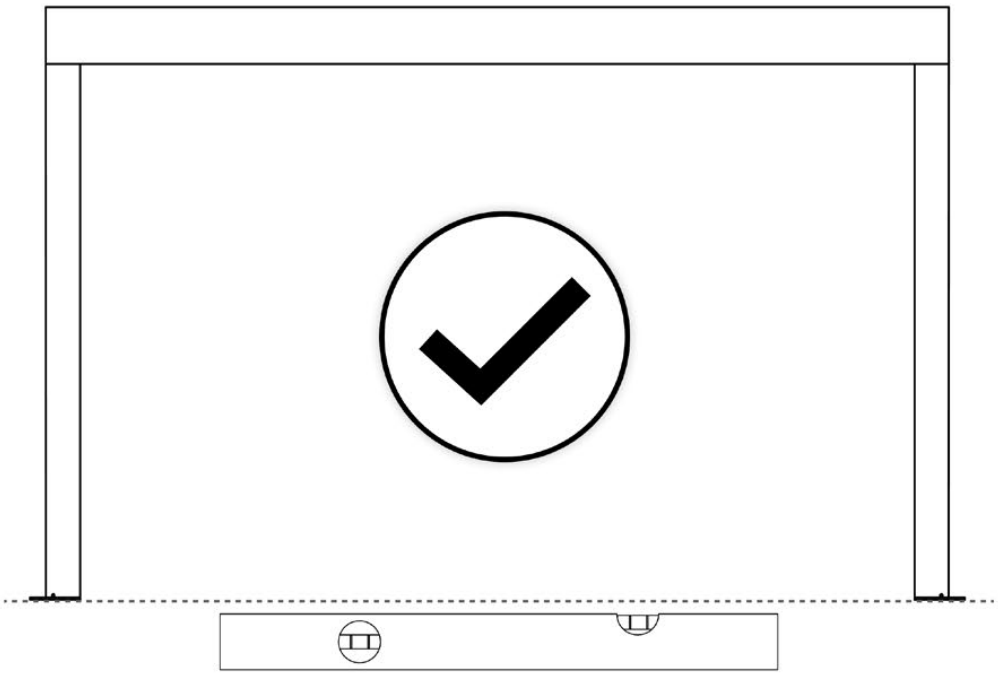

31

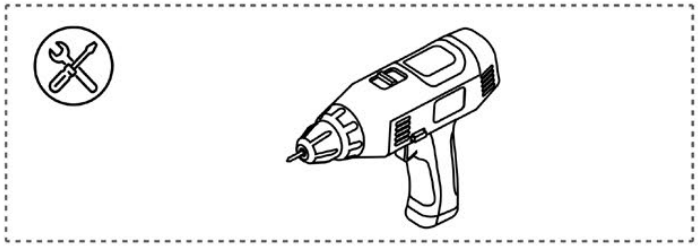

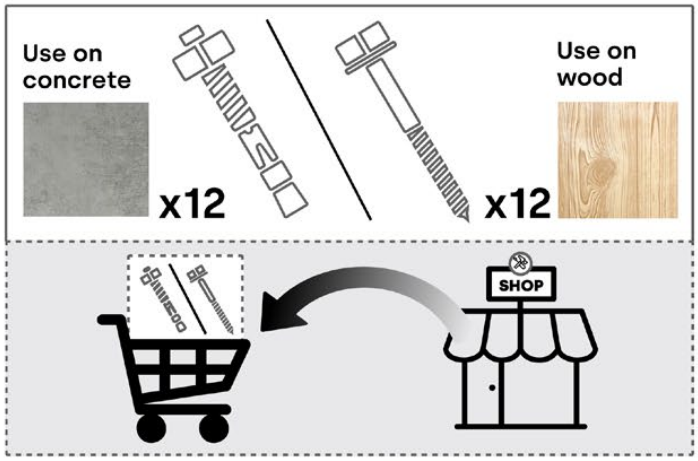

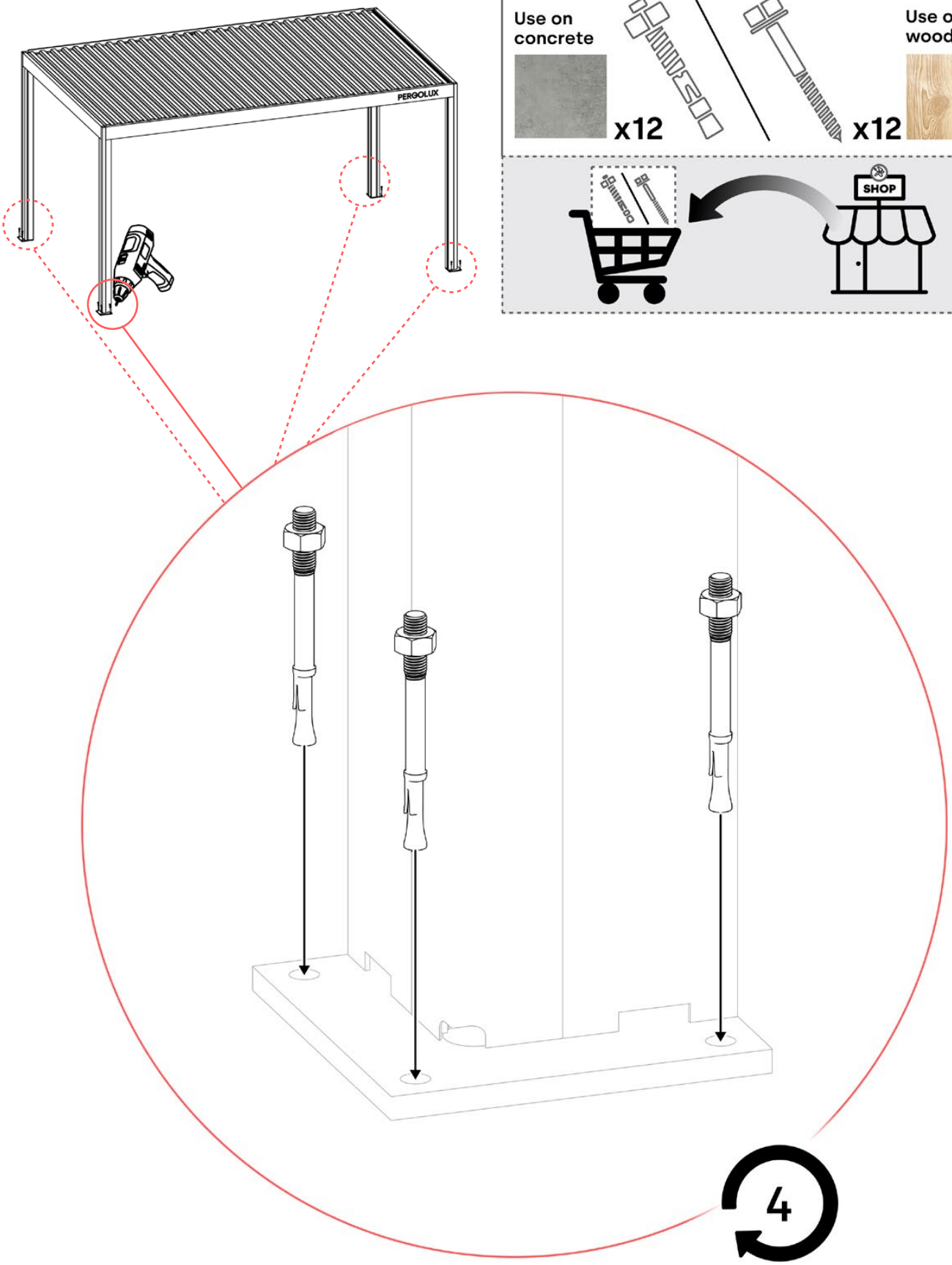

PERGOLUX | CARPORT

3 x 5 M / 10' x 16'

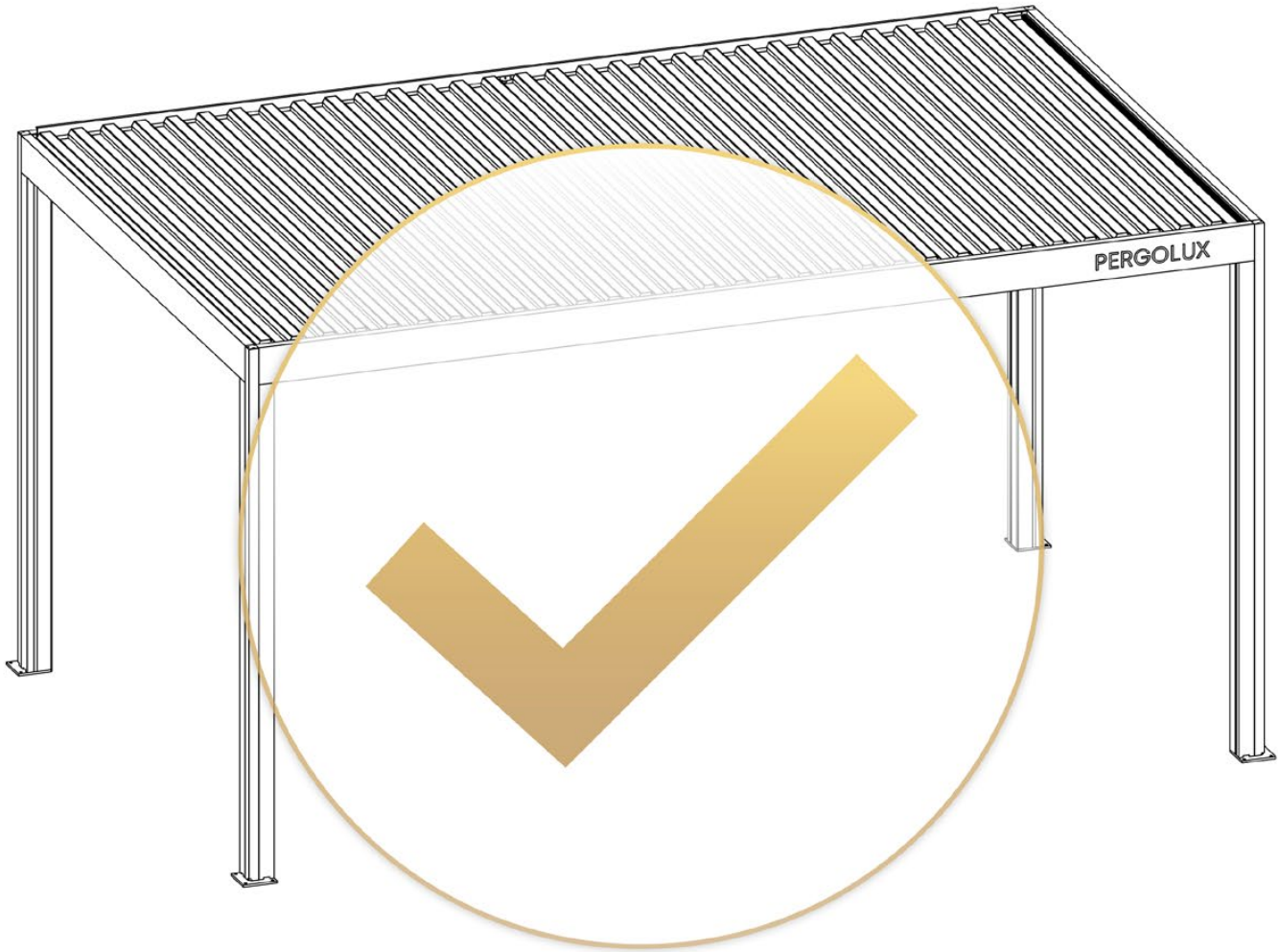

Designed and developed by PERGOLUX

10 Year GUARANTEE

reddot winner 2024

TÜVRheinland CERTIFIED

Type Approved
Regular
Production
Surveillance

www.tuv.com
ID 1111293124