S4

CUSTOM DESIGN



FREESTANDING

PERGOLUX

Designed and developed by PERGOLUX

10 Year GUARANTEE

reddot winner 2024

TÜVRheinland CERTIFIED

Type Approved
Regular
Production
Surveillance

www.tuv.com
ID 1111317678

INFORMATION

INSTALLATION INSTRUCTIONS:

Ensure all parts are present and undamaged before starting the assembly.

Secure to a solid foundation with the correct fasteners for your foundation.

(If applicable) Install motors and wiring as shown. Ensure the electrical components are powered off during installation.

Use the correct lifting and installation equipment.

SAFETY WARNINGS:
Keep children and pets away during installation.

Do not operate the structure if parts are loose or improperly installed.

Ensure the structure is securely anchored to prevent accidents.

Do not insert fingers or any objects between the louvres.

MAINTENANCE:
Regularly clean the aluminum structure to maintain its appearance and prevent the accumulation of dirt.

Also, make sure to clean the gutters regularly. Inspect moving parts for wear and lubricate as necessary.

Check anchor points periodically to ensure stability.

INSTALLATIONSANLEITUNG:

Stellen Sie sicher, dass alle Teile vorhanden und unbeschädigt sind, bevor Sie mit der Montage beginnen.

Befestigen Sie sie mit den richtigen Befestigungselementen für Ihr Fundament auf einem soliden Fundament.

(Falls zutreffend) Installieren Sie Motoren und Verkabelung wie gezeigt. Stellen Sie sicher, dass die elektrischen Teile während der Installation ausgeschaltet sind.

Verwenden Sie die richtige Hebe- und Installationsausrüstung.

SICHERHEITSHINWEISE:
Halten Sie Kinder und Haustiere während der Installation fern.

Betreiben Sie die Struktur nicht, wenn Teile lose oder nicht richtig installiert sind.

Stellen Sie sicher, dass die Struktur sicher verankert ist, um Unfälle zu vermeiden.

Stecken Sie keine Finger oder andere Gegenstände zwischen die Lamellen.

WARTUNG:
Reinigen Sie die Aluminiumstruktur regelmäßig, um ihr Aussehen zu erhalten und die Ansammlung von Schmutz zu verhindern.

Reinigen Sie auch die Dachrinnen regelmäßig. Überprüfen Sie bewegliche Teile auf Verschleiß und schmieren Sie sie bei Bedarf.

Überprüfen Sie die Ankerpunkte regelmäßig, um die Stabilität sicherzustellen.

CE

Pergolux GmbH, 9 Goethestraße,
36043 Fulda,
Germany
26
DOP-PRO-FSWM-S4

EN 13561:2015
Pergolux Pergola PRO S4
External use in buildings and other construction works
Resistance to wind loads: Class6(EN13561)

SYMBOL EXPLANATION



Indicates the outside of the pergola structure.



Indicates the inside of the pergola structure.



Important! Be cautious when assembling or handling this part.



Required tools for assembly.



Ensure grounding is connected before powering up.



Align slats according to sunlight direction for optimal shading.



Repeat this step as many times as the number indicates



Turn around



This step may require extra force.



Key information to follow during installation.



This item must be purchased separately.



Apply lubricant to make screw assembly easier.



Do not use a regular hammer, as it may cause damage.



AC Input



Motor



Variables



Repeat is variable

VARIABLES

Your Configurator length		Your variable
<1580	=	x9
<1730	=	x10
<1880	=	x11
<2030	=	x12
<2180	=	x13
<2330	=	x14
<2480	=	x15
<2630	=	x16
<2780	=	x17
<2930	=	x18
<3080	=	x19
<3230	=	x20
<3380	=	x21
<3530	=	x22
<3680	=	x23
<3830	=	x24
<3980	=	x25
<4130	=	x26
<4280	=	x27
<4430	=	x28
<4580	=	x29
<4730	=	x30
<4880	=	x31
<5060	=	x32
<5360	=	x34
<5660	=	x36
<5960	=	x38

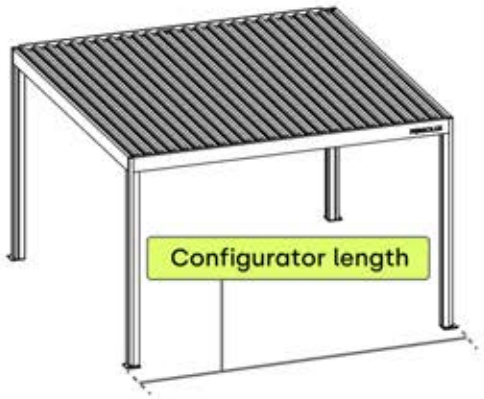

Variables



INFORMATION







Use a high-quality, weather-resistant and mold-resistant adhesive and sealant to seal the corners of the pergola and prevent leakage. Look for products that are designed for outdoor use and provide a strong, long-lasting bond.

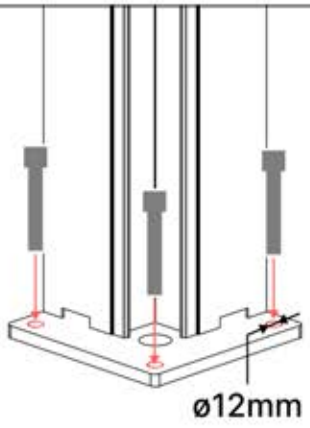

Use on concrete

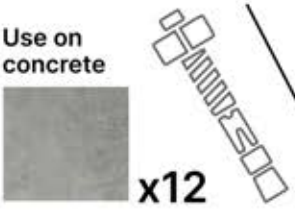



Use on wood

You need to buy your needed screws to attach the pergola to the ground

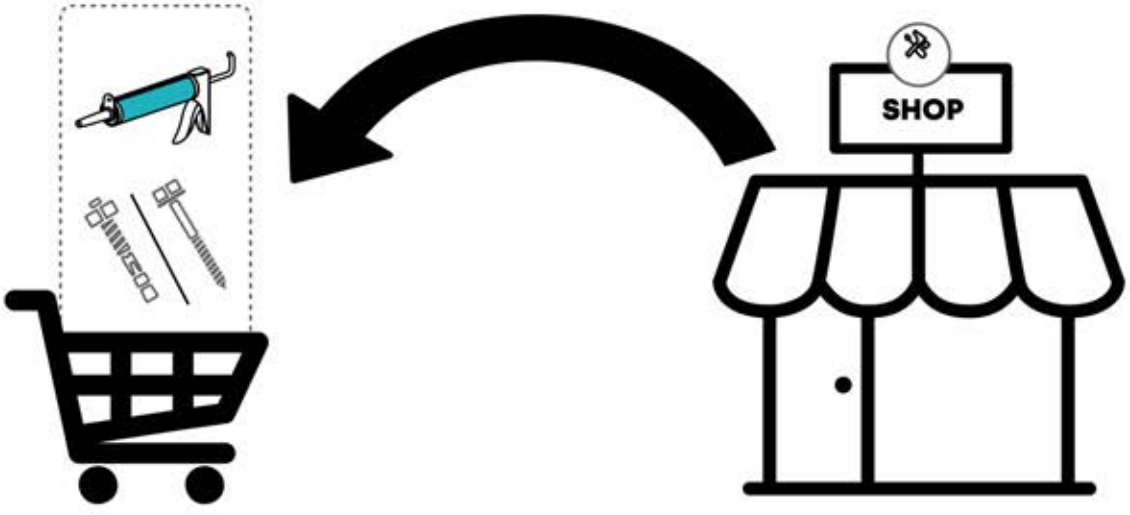

PERGOLUX

INFORMATION

All screws from **PERGOLUX** are made of stainless steel, ensuring durability and resistance to rust. To prevent damage to screws, follow these guidelines:

- **DO NOT OVERTIGHTEN**: Apply appropriate force to avoid stripping the threads.
- **CHOOSE THE CORRECT TOOL:** Use the proper screwdriver or bit to avoid damaging the screw head.
- **ENSURE PROPER USE:** With correct installation, screws will maintain their integrity and functionality over time.
- **USE LUBRICATION:** Apply lubricant to make screw assembly easier.

Apply lubricant to make screw assembly easier.



TOOLS



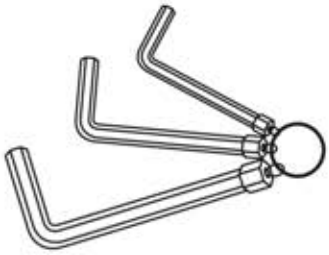

3mm, 4mm, 5mm



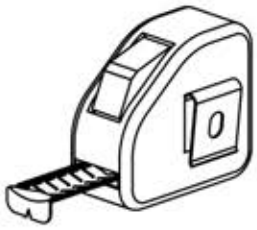





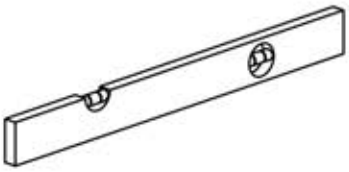



TX15, TX20, TX25, TX30



PACKAGE OVERVIEW

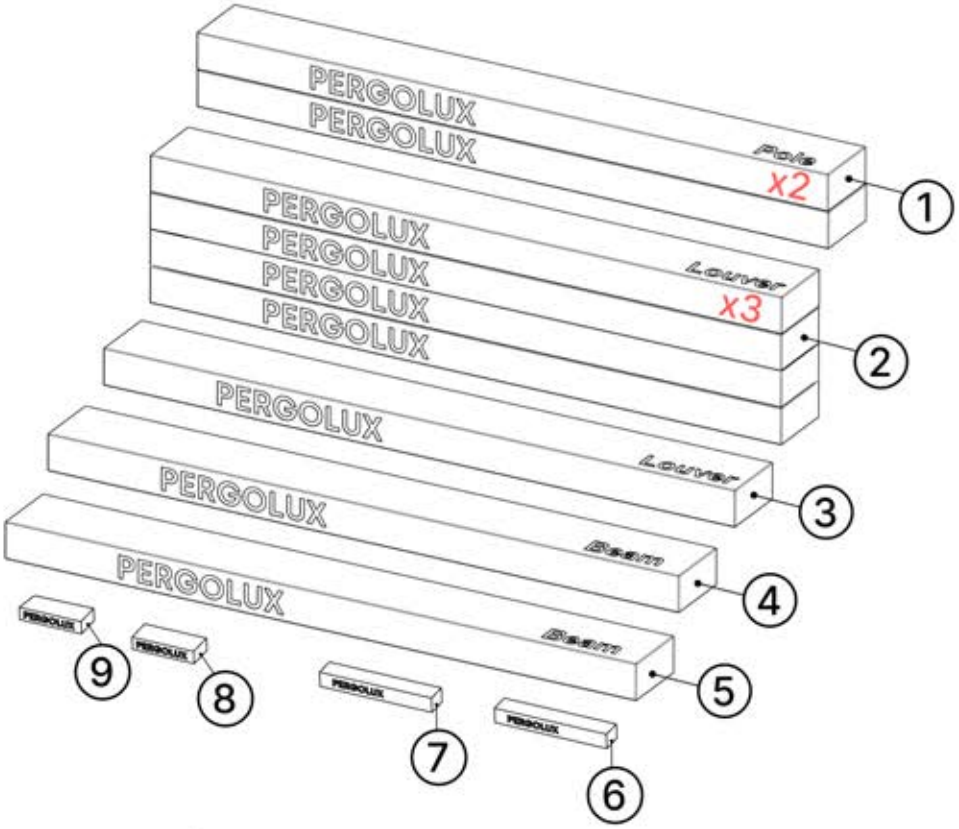

ORDER	ANTHRACITE	WHITE	BLACK
1	C120	C122	C121
2	L216	L220	L218
3	L228	L232	L230
4	B233	B241	B237
5	B257	B261	B259
6	WHITE / RGB LED		
7	MOTOR		
8	CONTROL BOX		
9	POWER CABLE		

ITEMS IN BOX

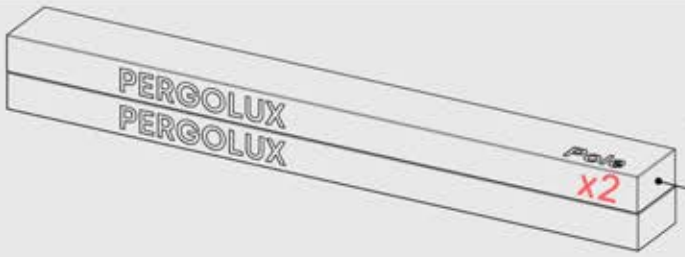

	ANTHRACITE	WHITE	BLACK
1	C120	C122	C121



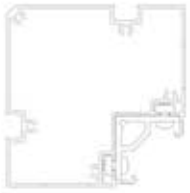

PN-200002606

4x





PN-200003386

4x



PN-200002614

4x

ITEMS IN BOX

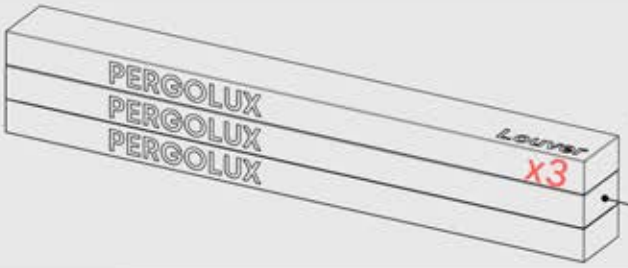

2

ANTHRAZIT	WEISS	SCHWARZ
L216	L220	L218

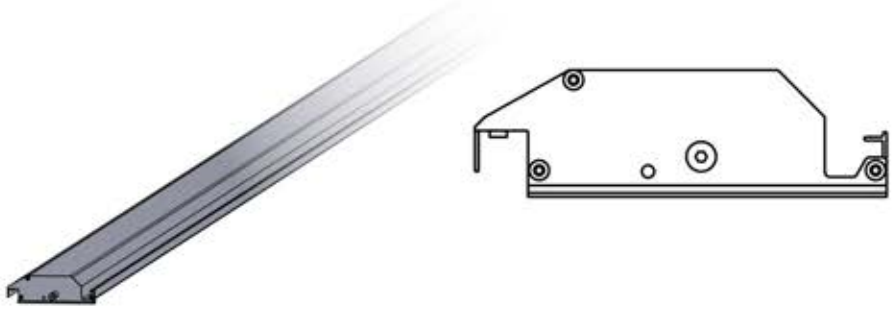

PN-200002980

Variable



3

ANTHRAZIT	WEISS	SCHWARZ
L228	L232	L230

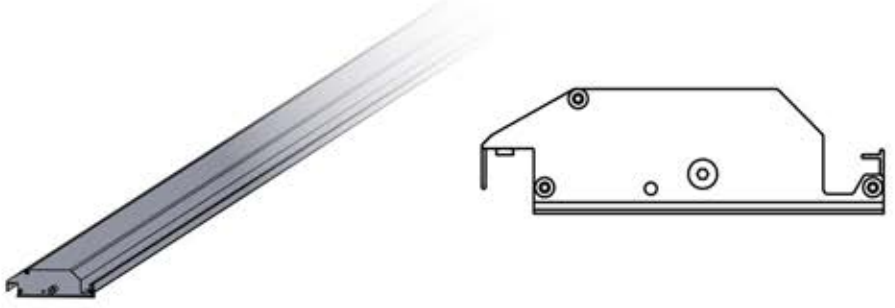

PN-200002980

Variable

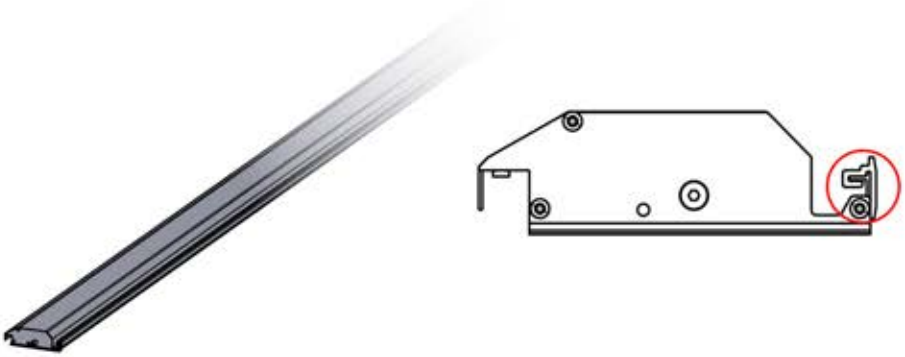

PN-200002985

1x

ITEMS IN BOX



	ANTHRACITE	WHITE	BLACK
4	B233	B241	B237



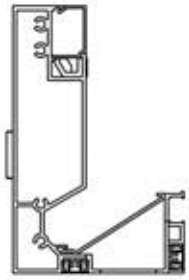

PN-200003283

1x



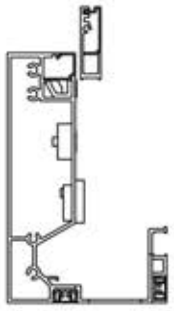

PN-200002605

1x





PN-200002609

1x



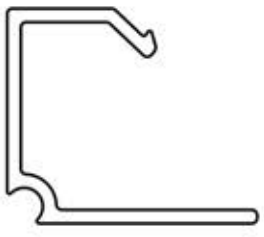

PN-200002623

1x

ITEMS IN BOX



4

ANTHRACITE	WHITE	BLACK
B233	B241	B237





PN-200002613

1x





PN-200002633

1x





PN-200003382

1x

ITEMS IN BOX

Note: If accessory bags lack part number stickers, refer to the manual for identification.



	ANTHRACITE	WHITE	BLACK
4	B233	B241	B237

Zip Bag PN-20000 **3280**

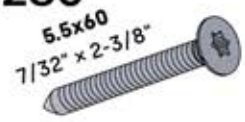

PN-200000560
20x

Zip Bag PN-20000 **3320**



PN-200000826
2x

Zip Bag PN-20000 **3282**



PN-200001514
4x

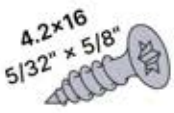

PN-200000840
12x

Zip Bag PN-20000 **3276**



PN-200002618
4x



PN-200000571
4x

Zip Bag PN-20000 **3278**



PN-200003031
1x

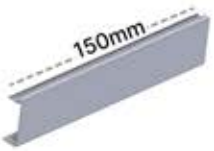

PN-200003033
2x



PN-200003030
1x



PN-200001207
2x

Zip Bag PN-20000 **3279**



PN-200000568
32x

Zip Bag PN-20000 **3379**



PN-200000960
4x

Zip Bag PN-20000 **3285**



PN-200000507
4x



PN-200000568
4x



PN-200000569
8x

ITEMS IN BOX

Note: If accessory bags lack part number stickers, refer to the manual for identification.

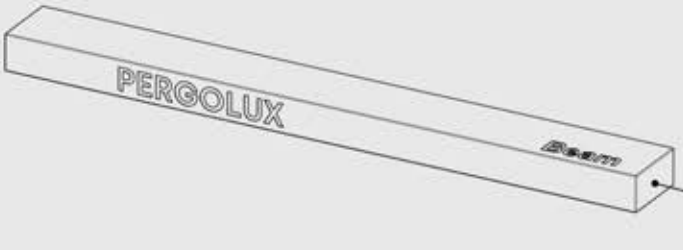

	ANTHRACITE	WHITE	BLACK
4	B233	B241	B237

Zip Bag PN-20000 3277

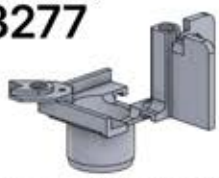

PN-200002617
4x

Zip Bag PN-20000 3284

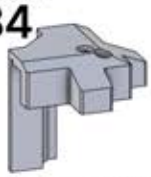

PN-200002625
4x

Zip Bag PN-20000 3371



PN-200003372
1x



PN-200003373
1x



PN-200001946
1x



PN-200000561
1x



PN-200000502
1x

Zip Bag PN-20000 3281



PN-200002622
4x



PN-200000680
8x



PN-200001340
1x

ITEMS IN BOX



5

ANTHRACITE	WHITE	BLACK
B257	B261	B259



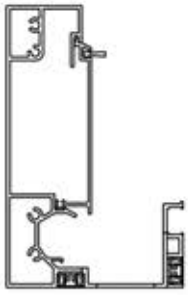

PN-200003356

2x





Premounted

PN-200002984

2x





PN-200003399

2x

ITEMS IN BOX



6 WHITE / RGB LED

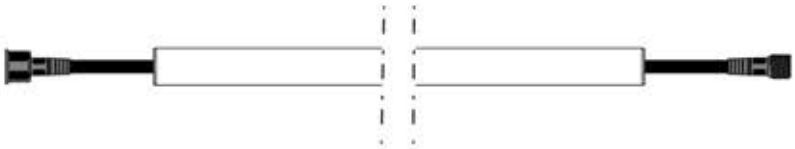

LED light strip

4x



Y cable

1x



7 ELECTRIC MOTOR



Electric motor
PN-200001562
1x



PN-200001623

1x



PN-200001624

1x



PN-200001625

2x

ITEMS IN BOX

S4



8 CONTROL BOX



Control box

1x



PN-200002756

1x



Matter antenna clip

1x



PN-200002754

1x



PN-200002684

10x



PN-200002758

1x



PN-200002683

5x



PN-200002753

2x



QR-code

1x



PN-200002759

2x



3M tape

1x



PN-200002757

1x

ITEMS IN BOX

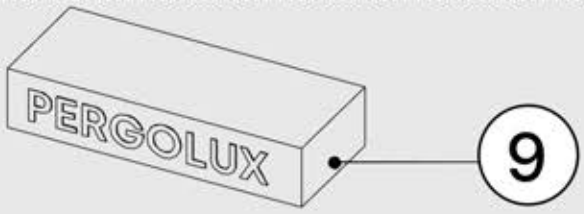

POWER CABLE



Power cable

1x

All electric parts should be tested before installation.

LEDs + Motor (and heater) should be connected to the Control box and programmed to ensure functionality.

Matter + Smart home can be connected at anytime by simply scanning the QR code provided



CONTROL BOX

View Manual

TEST OF ELECTRONICS

** Only if you ordered LED lights to your pergola.

All electric parts should be tested before installation.

LEDs + Motor (and heater) should be connected to the Control box and programmed to ensure functionality.

Matter + Smart home can be connected at anytime by simply scanning the QR code provided

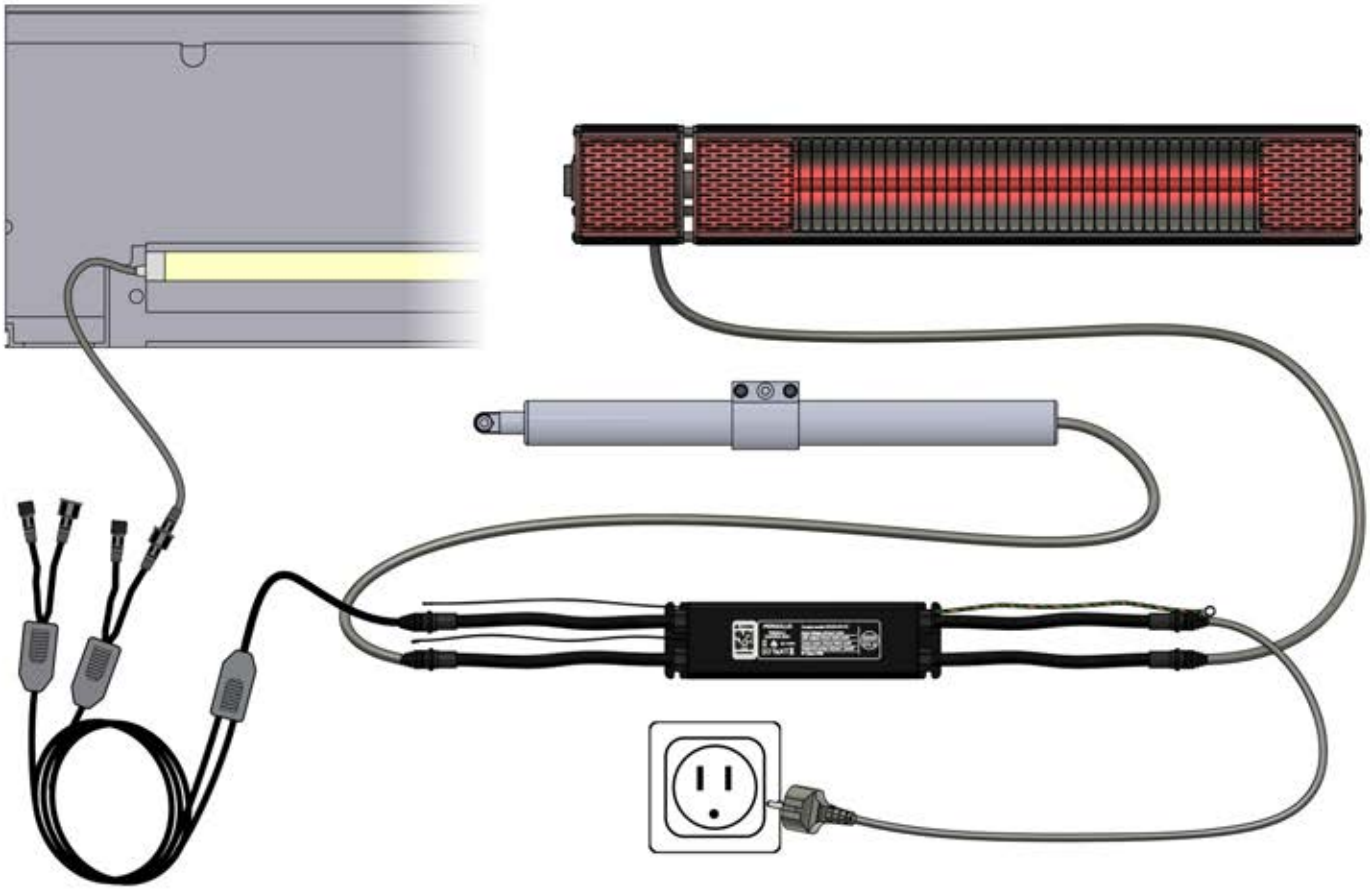

PERGOLUX | CUSTOM DESIGN **S4**

FREESTANDING

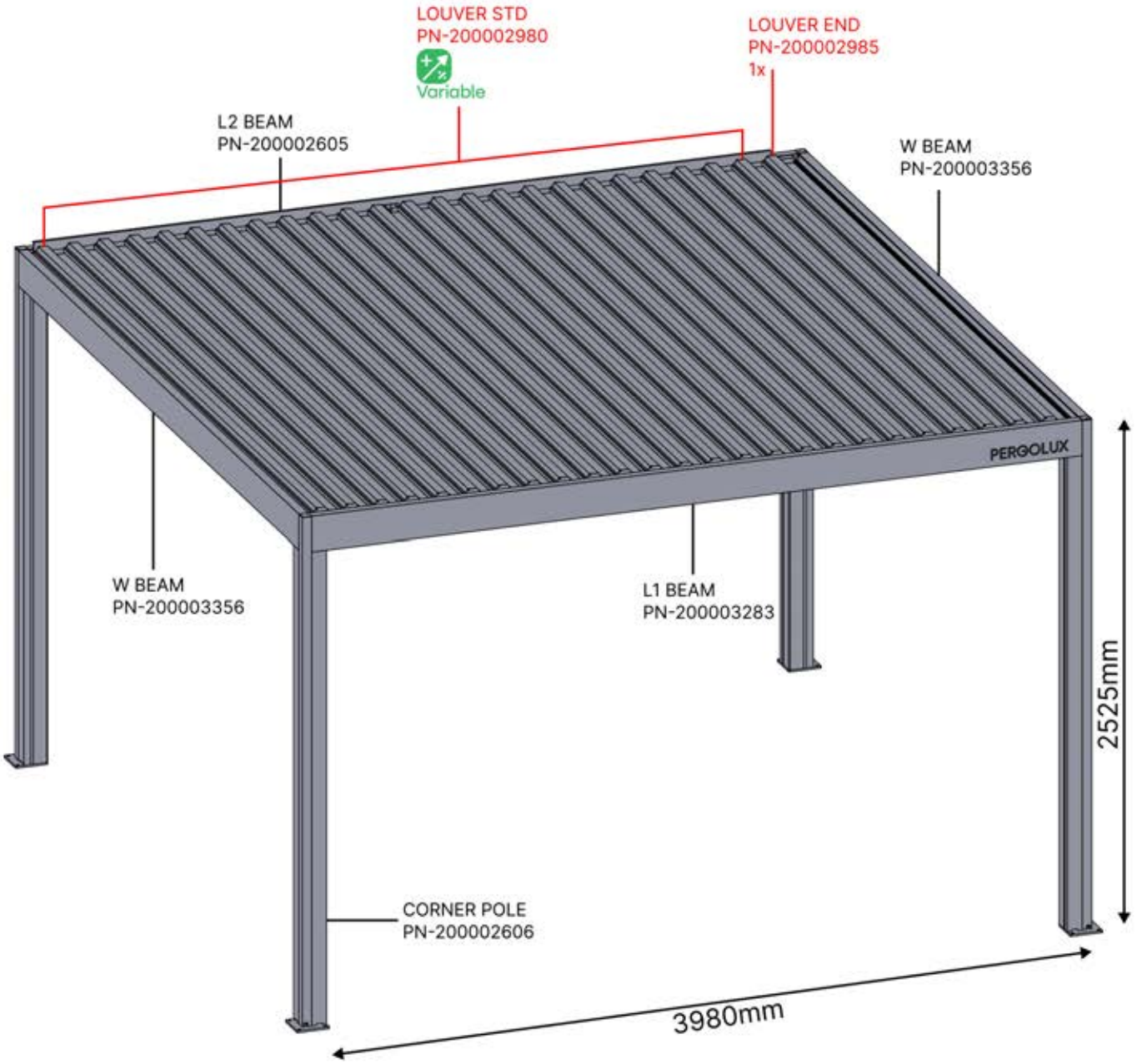

PERGOLUX | CUSTOM DESIGN **S4**

FREESTANDING

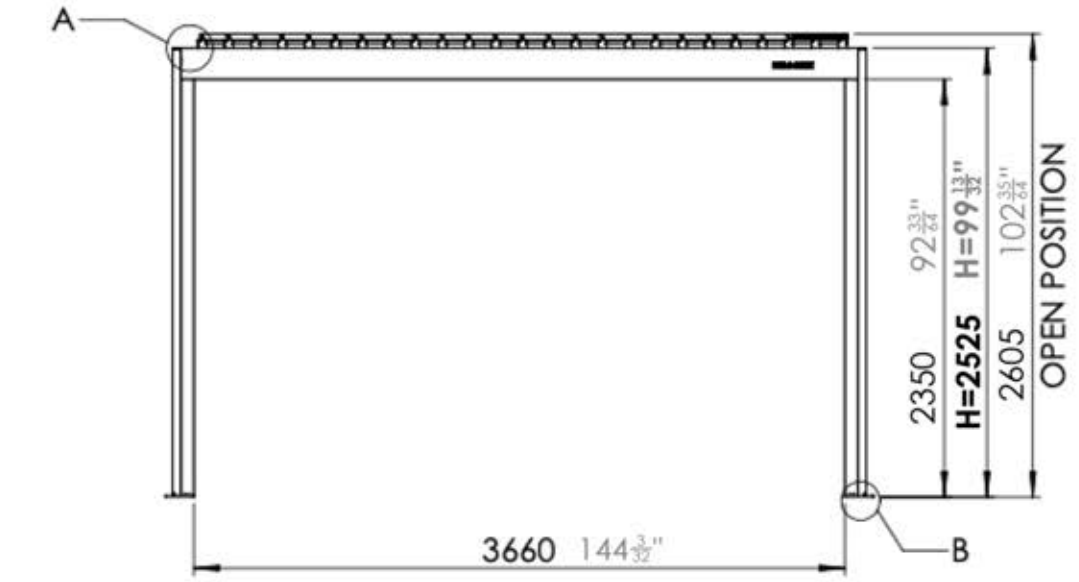

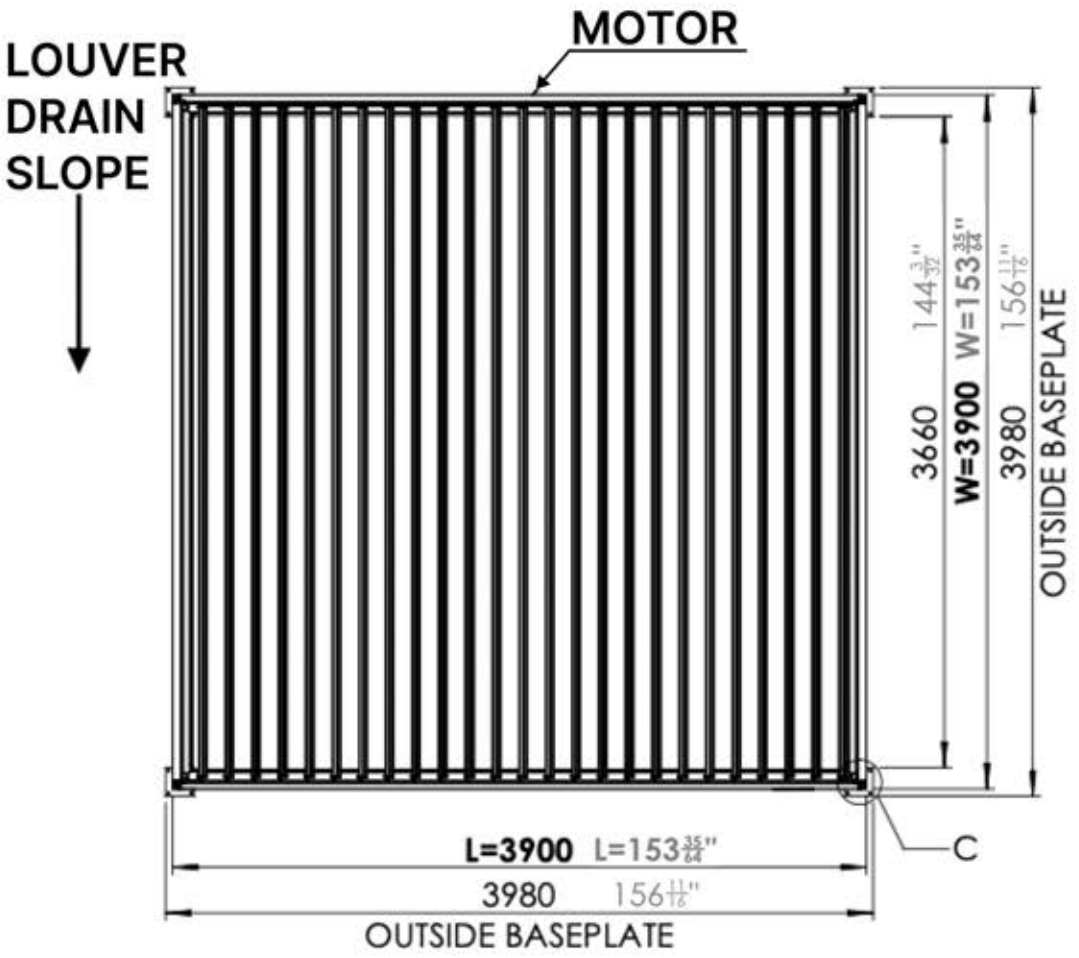

INFORMATION

Are you installing a screen, slat wall or glass wall?

It is recommended to remove these Snapfit covers and clips now before installing the pergola.

Cover and clips



PN-200000512
SnapFIT cover clip



SnapFIT cover

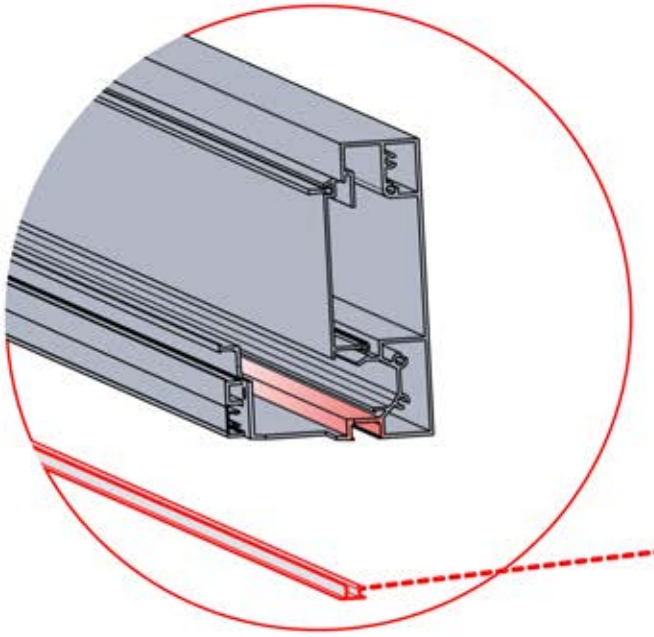

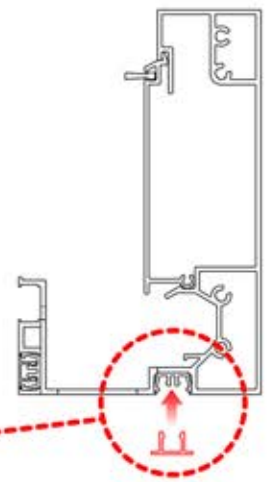

INFORMATION

Are you installing a heater, fan or LED lights?

It is recommended to remove both snap-fit covers from the beam now.

Cover and clips



PN-200000512
SnapFIT COVER CLIP



SnapFIT cover

INFORMATION

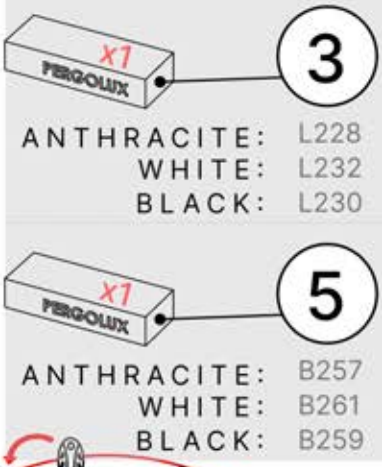

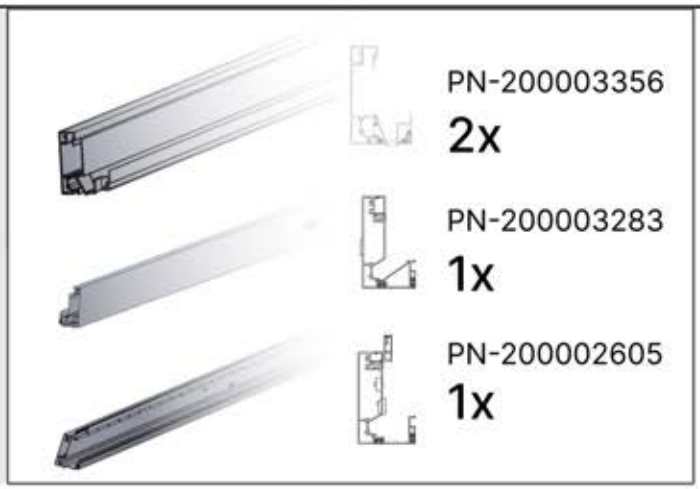

PN-200003283

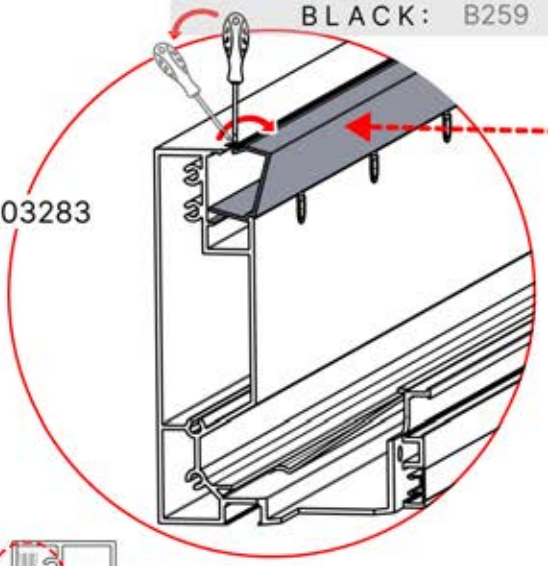

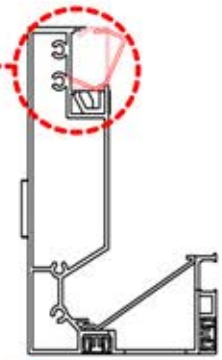

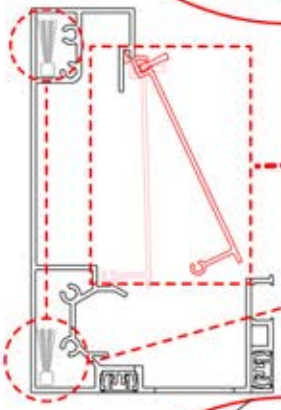

Remove the brush from the beam and set it aside. It will be installed during a later step in the manual.

PN-200003356

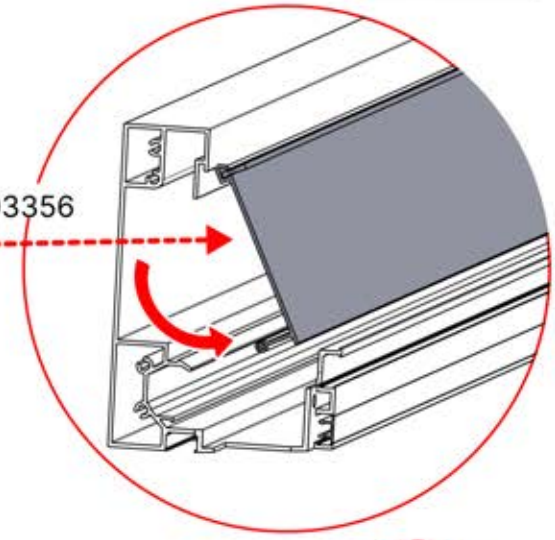

PN-200002605

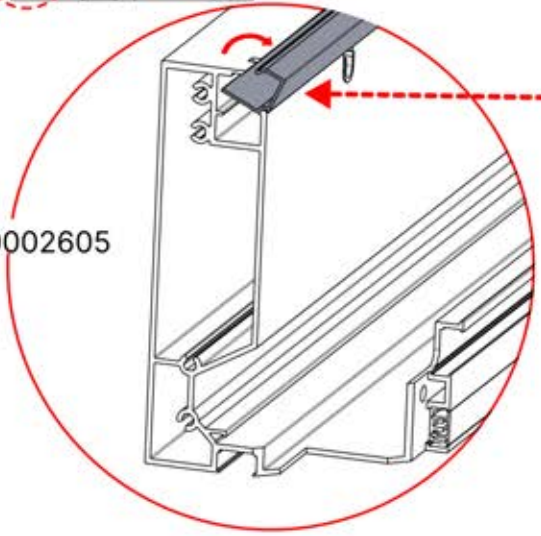

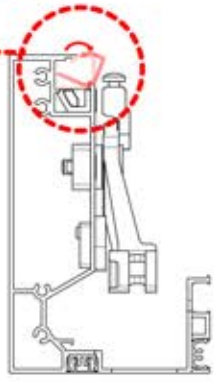

01



ANTHRACITE: C120
WHITE: C122
BLACK: C121

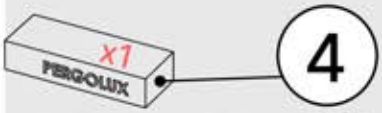

ANTHRACITE: B233
WHITE: B241
BLACK: B237



PN-200002606
4x



PN-200002614
4x

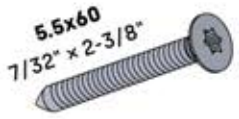

PN-200000560
20x

PN-20000
3280
Zip Bag

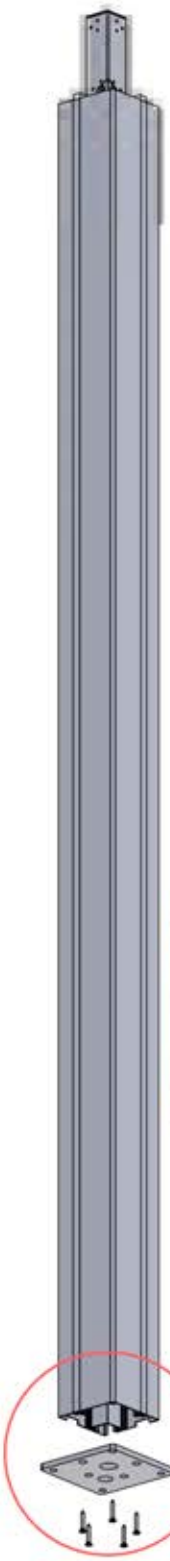

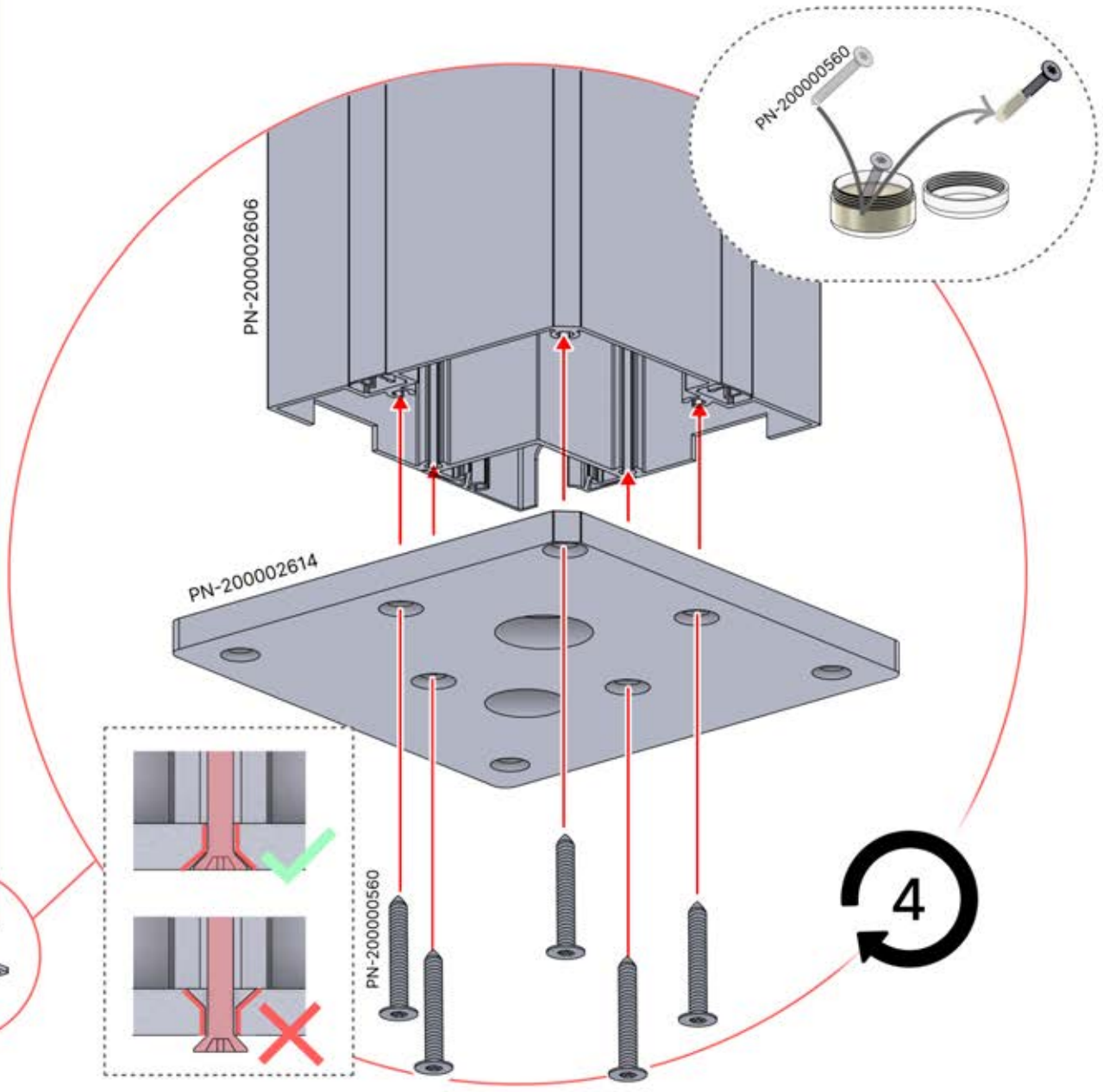

02



1

ANTHRACITE: C120
WHITE: C122
BLACK: C121

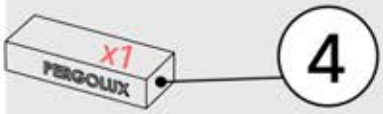

4

ANTHRACITE: B233
WHITE: B241
BLACK: B237



PN-200002606
4x



PN-200003283
1x



PN-200002605
1x



PN-200000568
16x

PN-20000
3279
Zip Bag

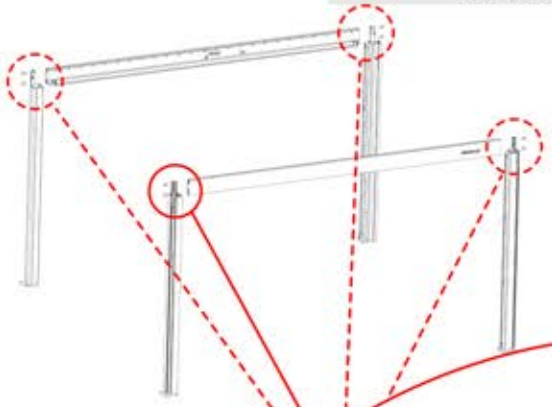

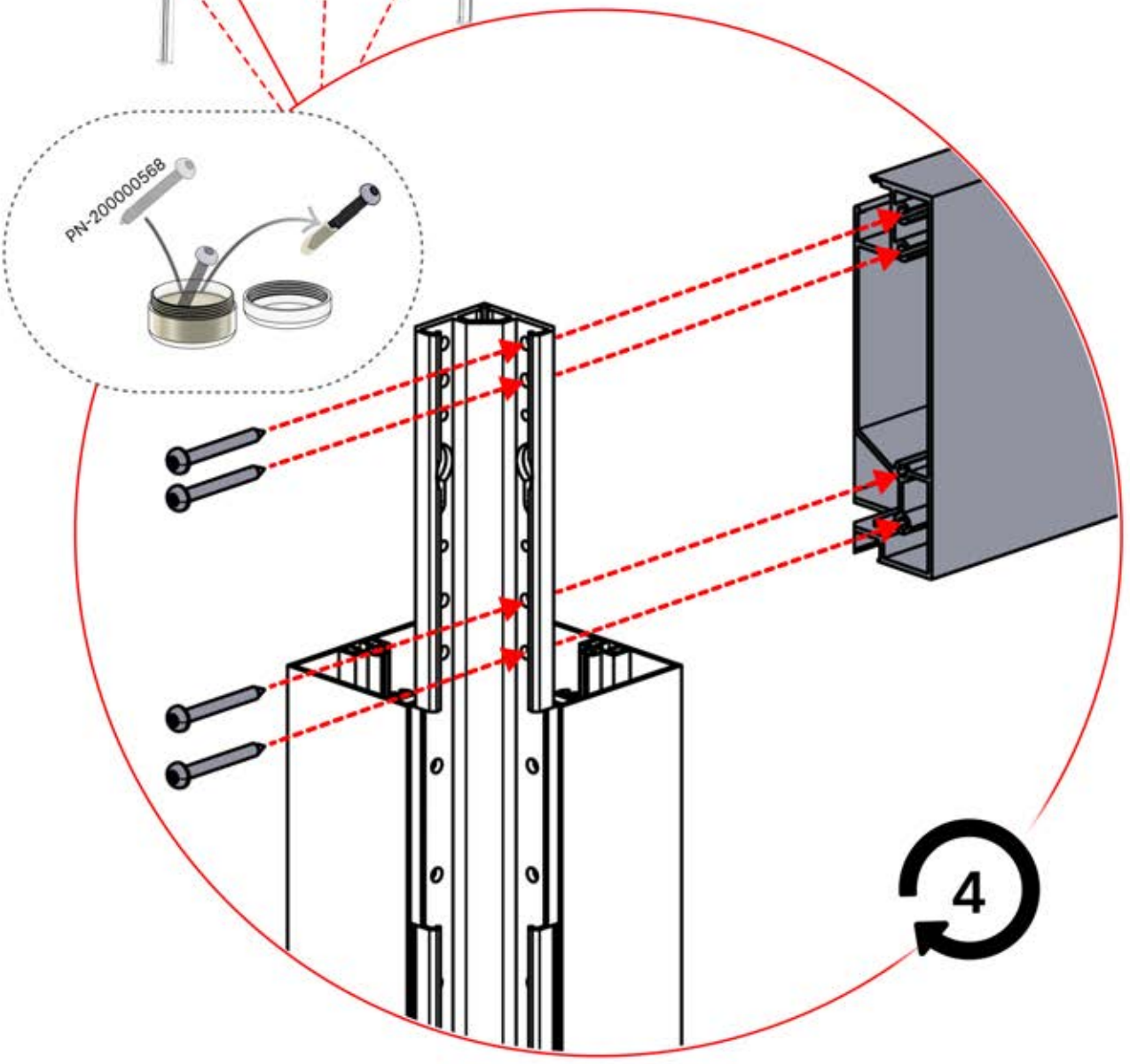

03

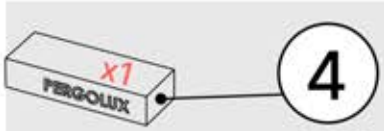

ANTHRACITE: B233
WHITE: B241
BLACK: B237



PN-200000507
4x
PN-20000
3285 Zip Bag

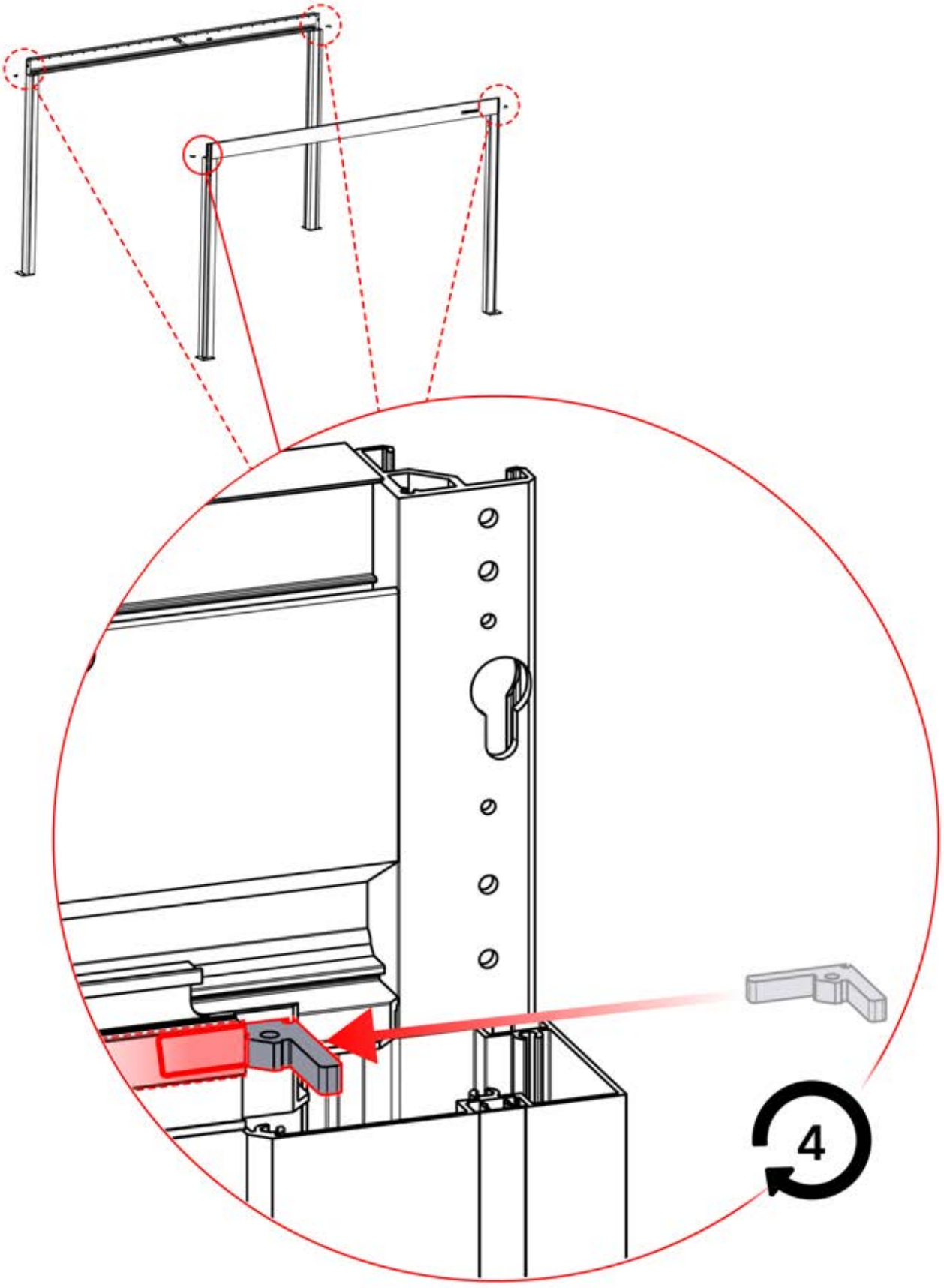

04

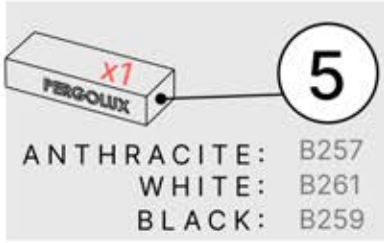

ANTHRACITE: B257
WHITE: B261
BLACK: B259

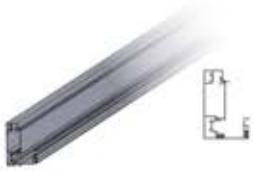

PN-200003356

2x

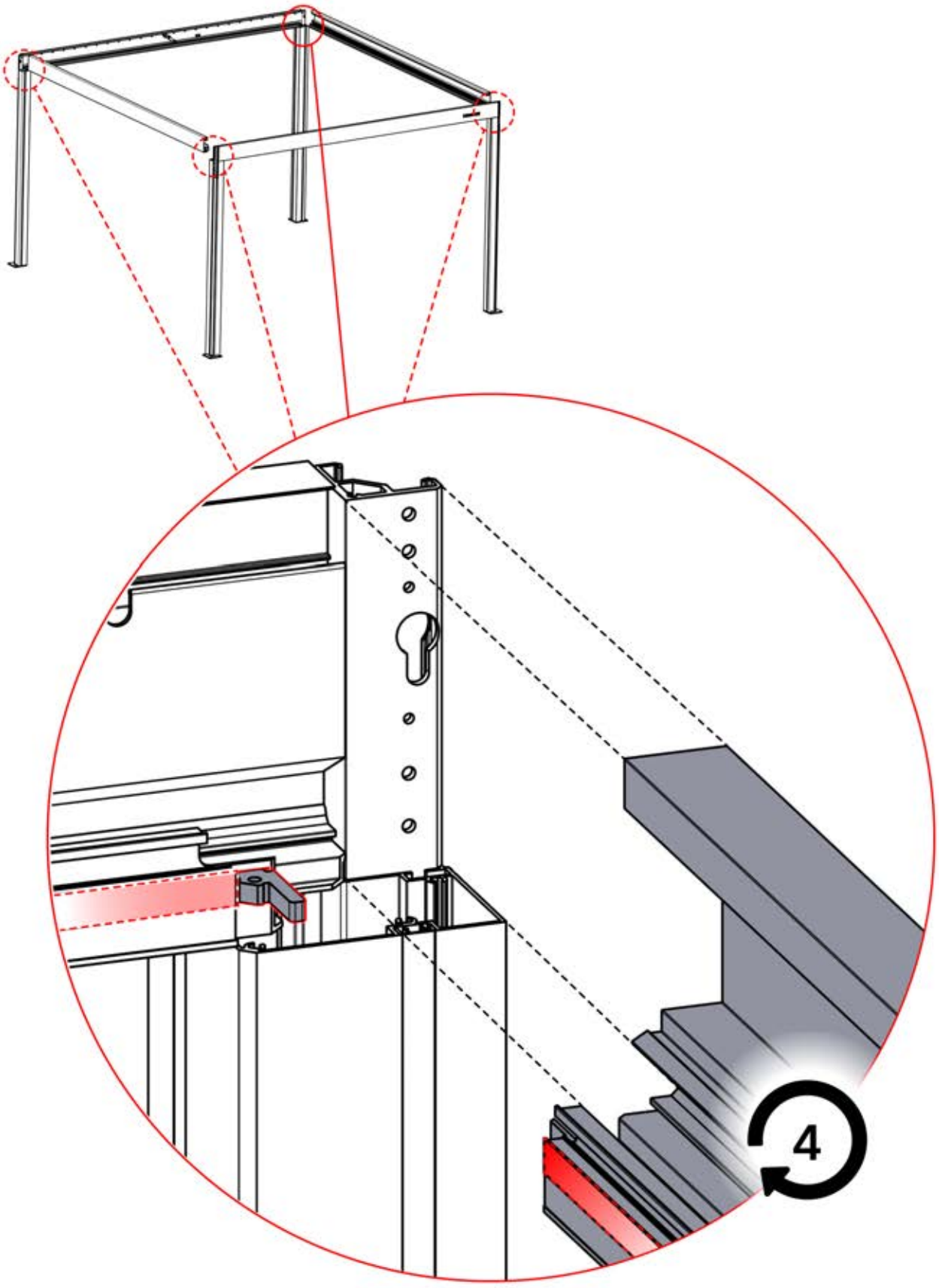

05

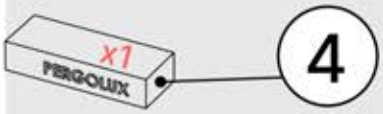

ANTHRACITE: B233
WHITE: B241
BLACK: B237



PN-200000568
16x
PN-20000
3285 Zip Bag

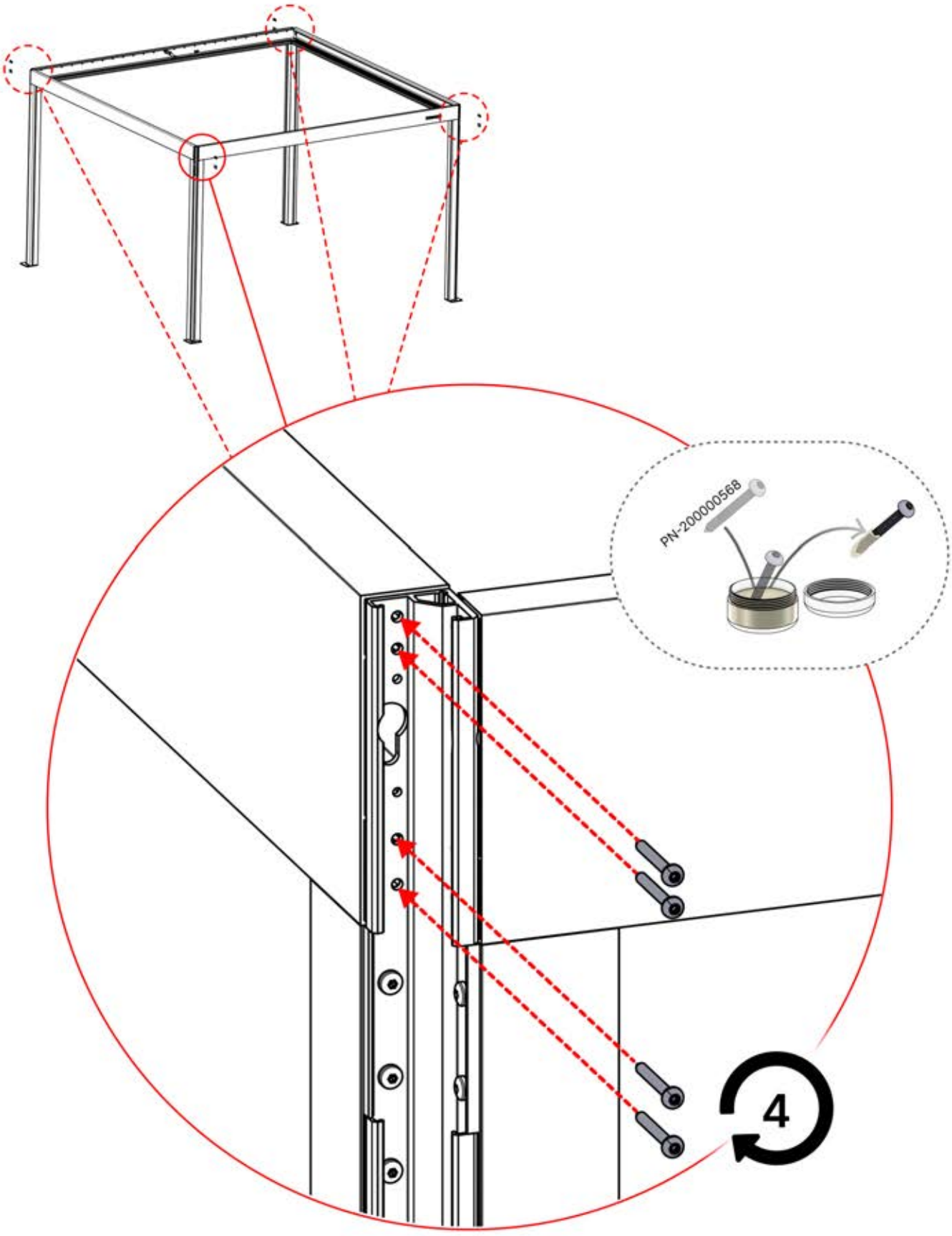

06

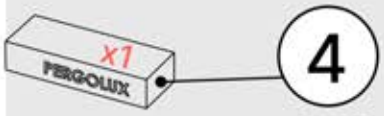

ANTHRACITE: B233
WHITE: B241
BLACK: B237



PN-200000569
8x
PN-20000
3285
Zip Bag

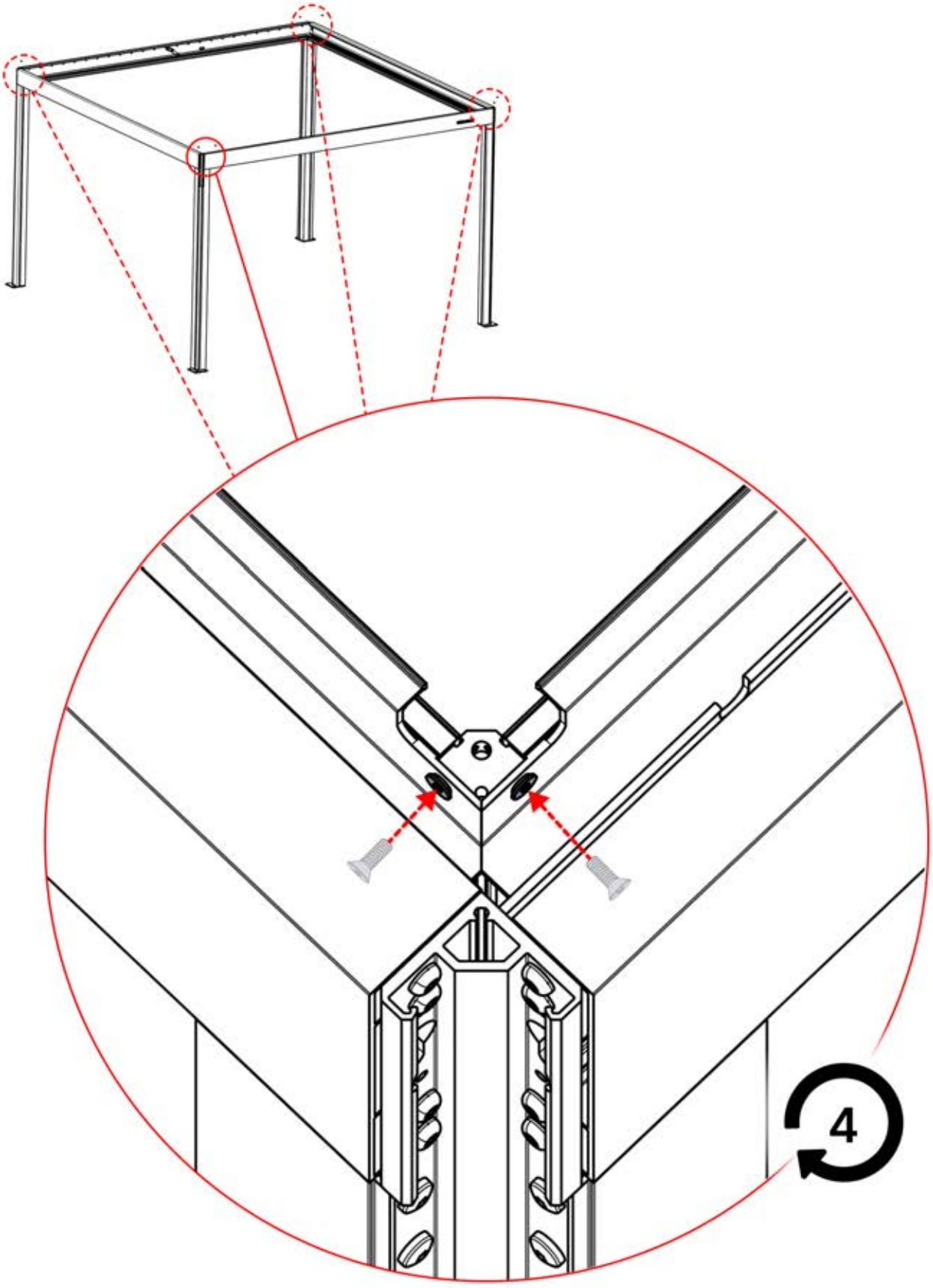

07

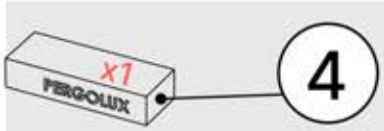

ANTHRACITE: B233
WHITE: B241
BLACK: B237



PN-200000568
4x
PN-20000
3285
Zip Bag

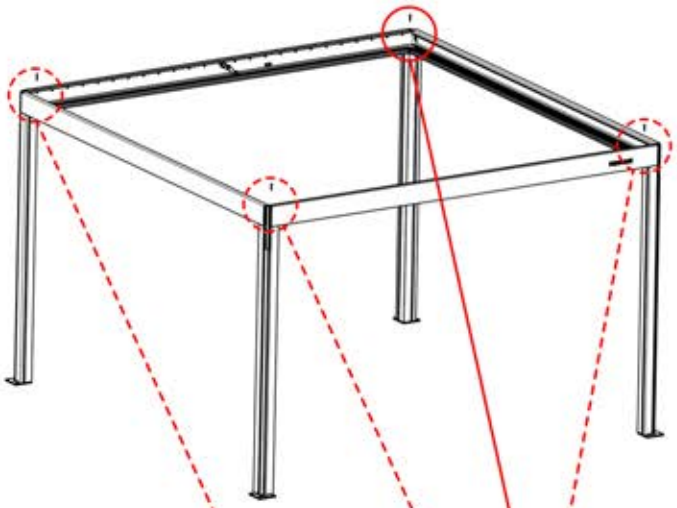

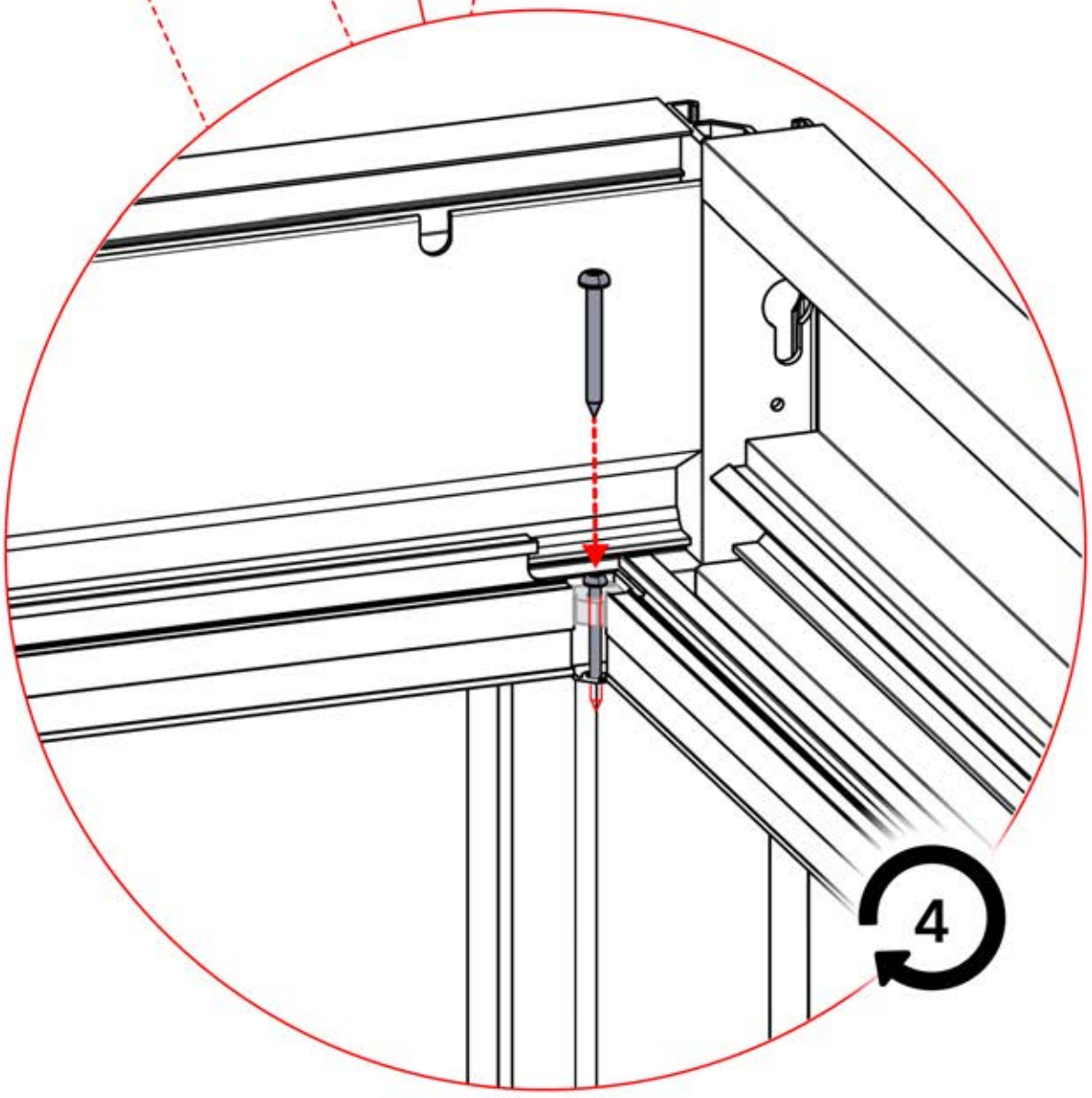

08

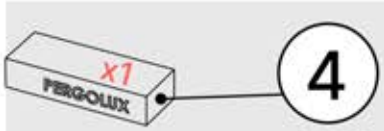

ANTHRACITE: B233
WHITE: B241
BLACK: B237

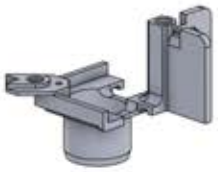

PN-200002617
4x
PN-20000 3277 Zip Bag

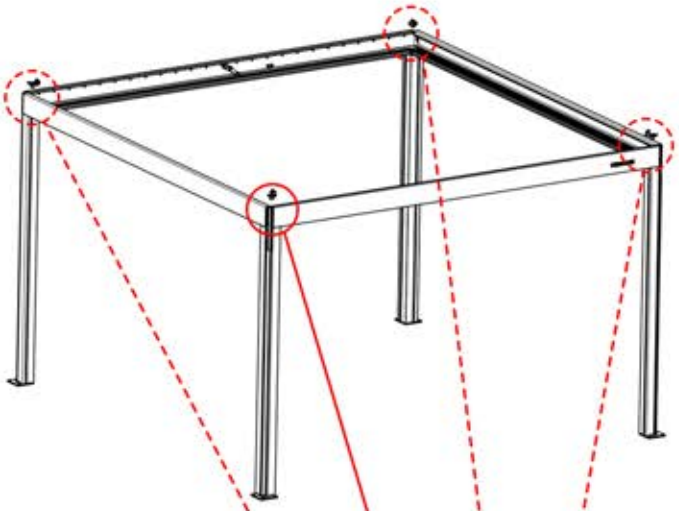

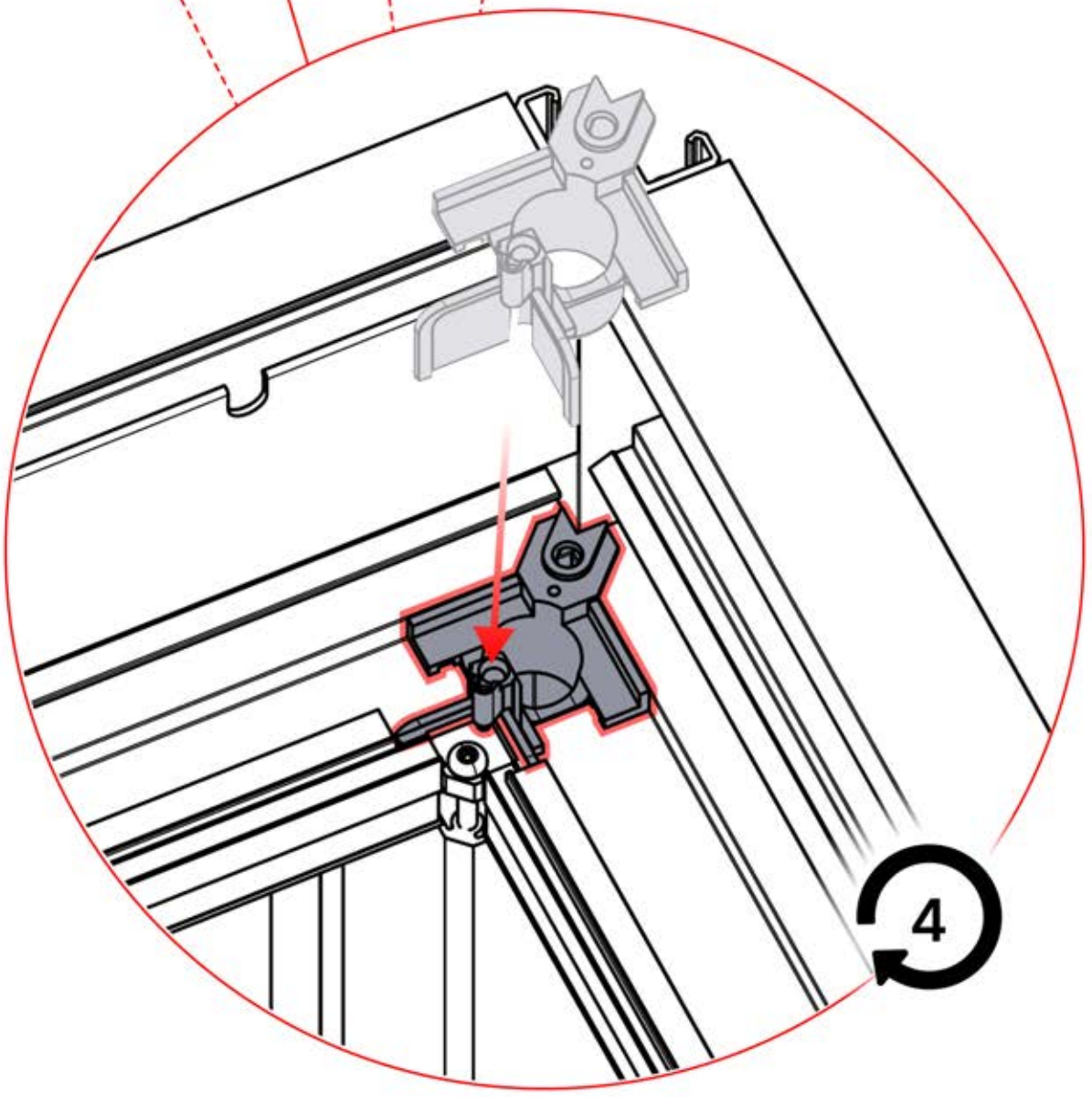

09

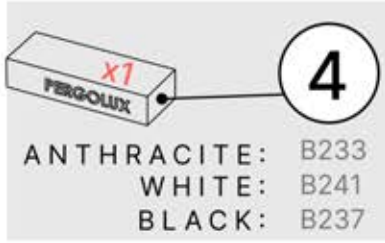

ANTHRACITE: B233
WHITE: B241
BLACK: B237



PN-200002618
4x



PN-200000571
4x

PN-20000
3276
Zip Bag

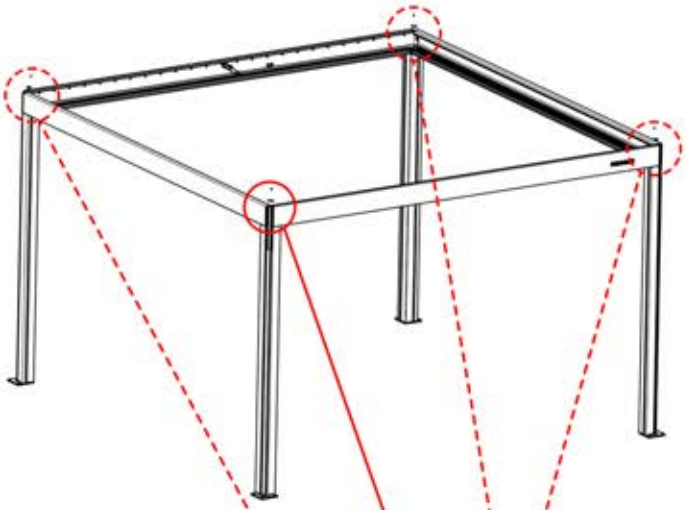

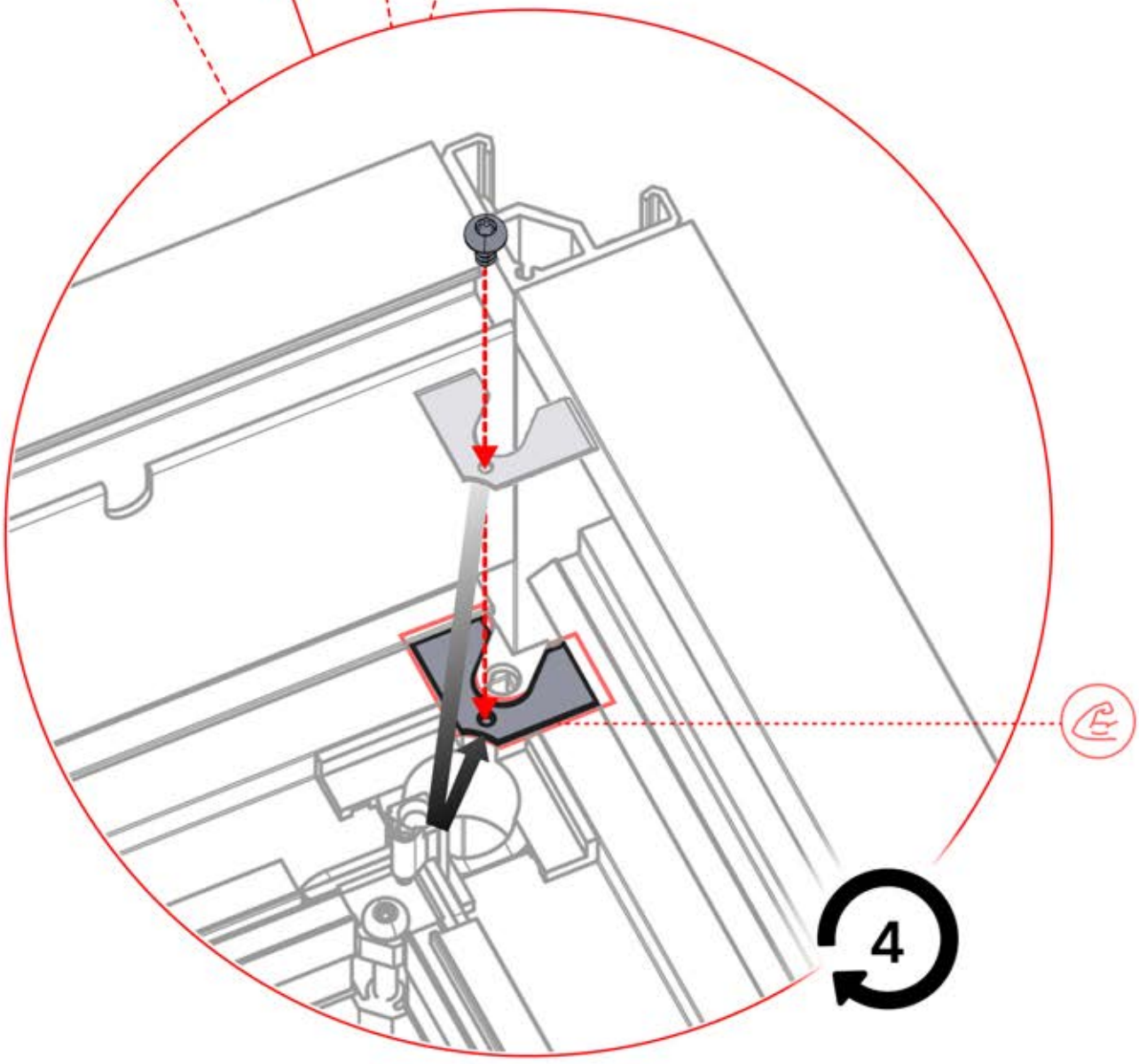

IMPORTANT INFORMATION

Handle with care.

When installing the light strip, do not pull or bend the wires on both sides with force, as this may cause the solder joints to fall off.

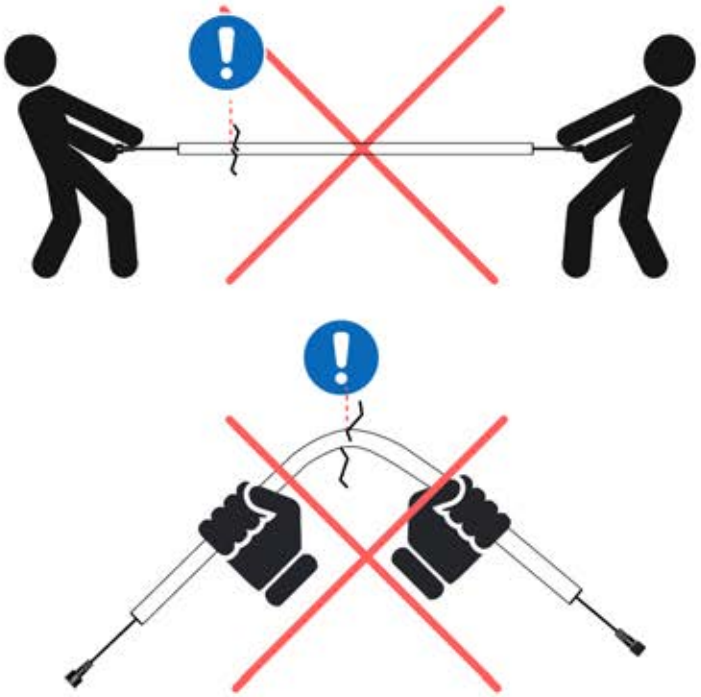

Important! Please watch all the videos before starting the assembly.

The videos contain important information relevant to the assembly process.



INFORMATION

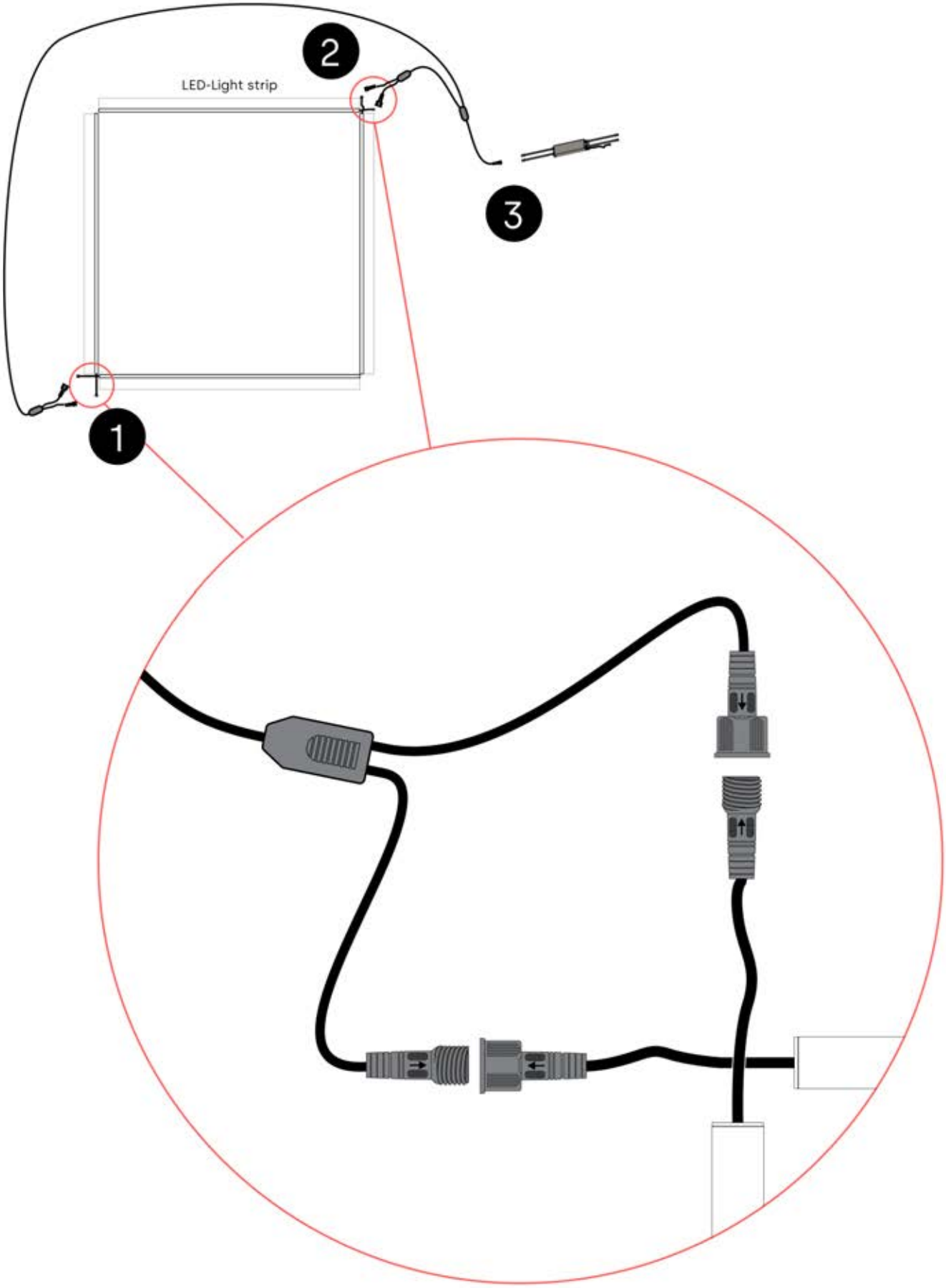

INFORMATION

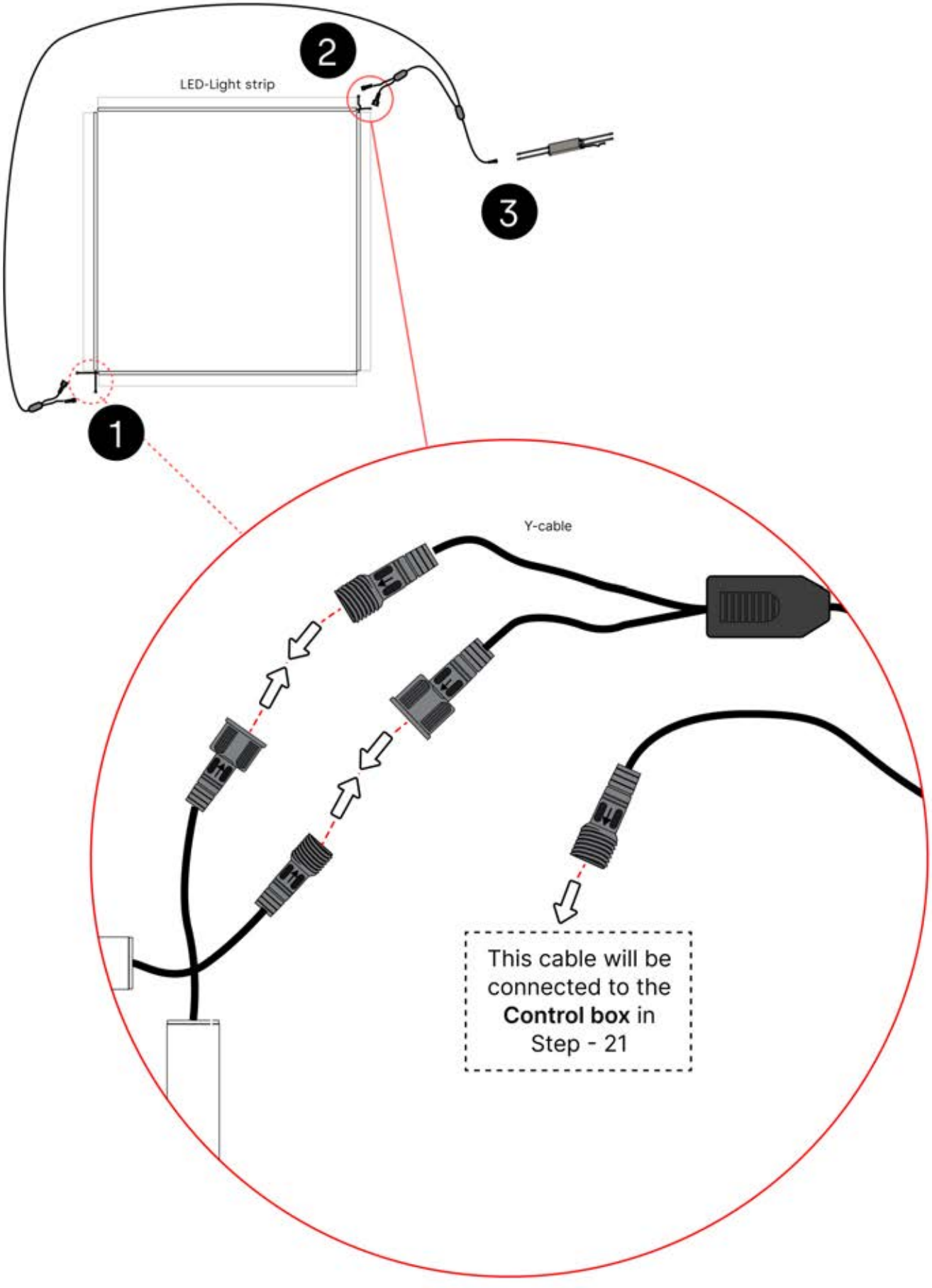

10

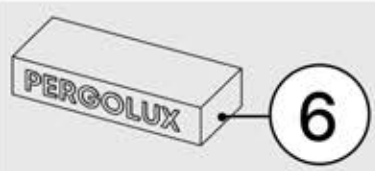

WHITE / RGB LED



LED strip

1x

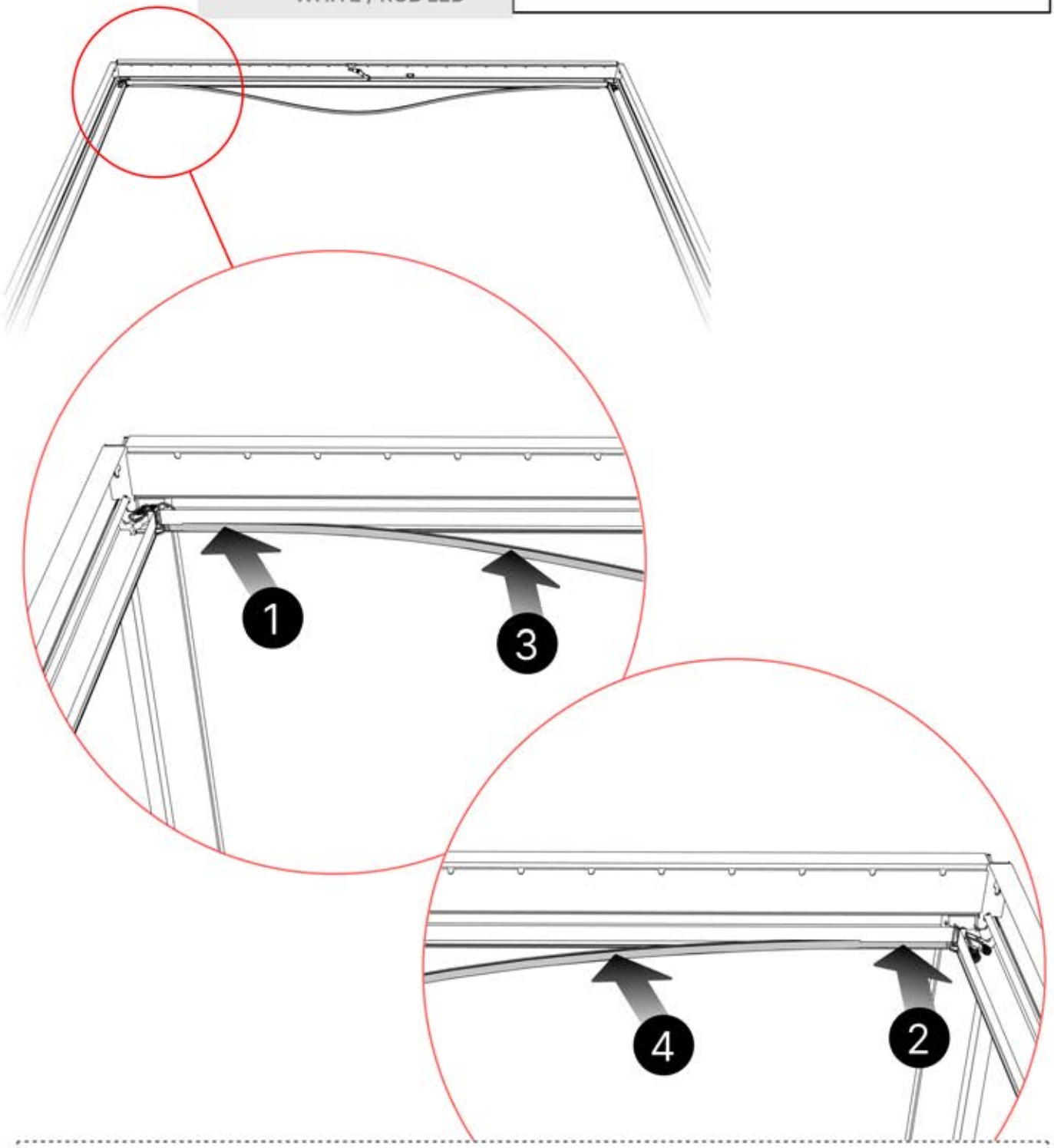

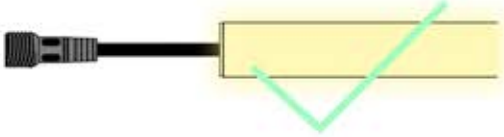

This side is the front and should face outward

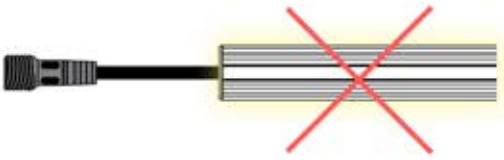

This side is the back and should be positioned to face the beam

11

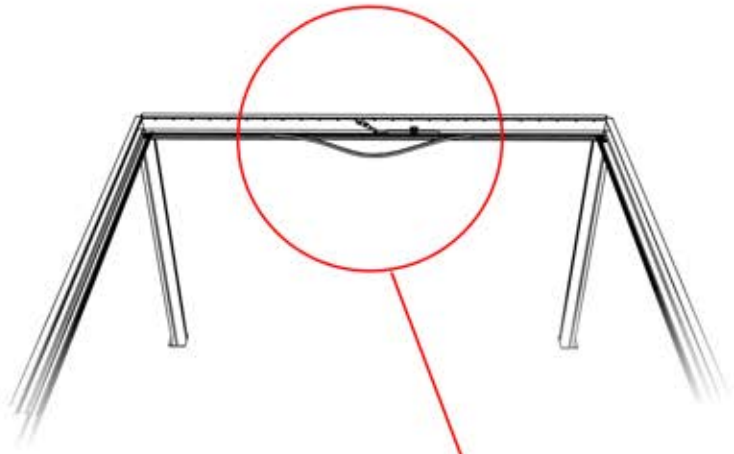

Tip: For a smoother LED installation, spray the track with soapy water before mounting.



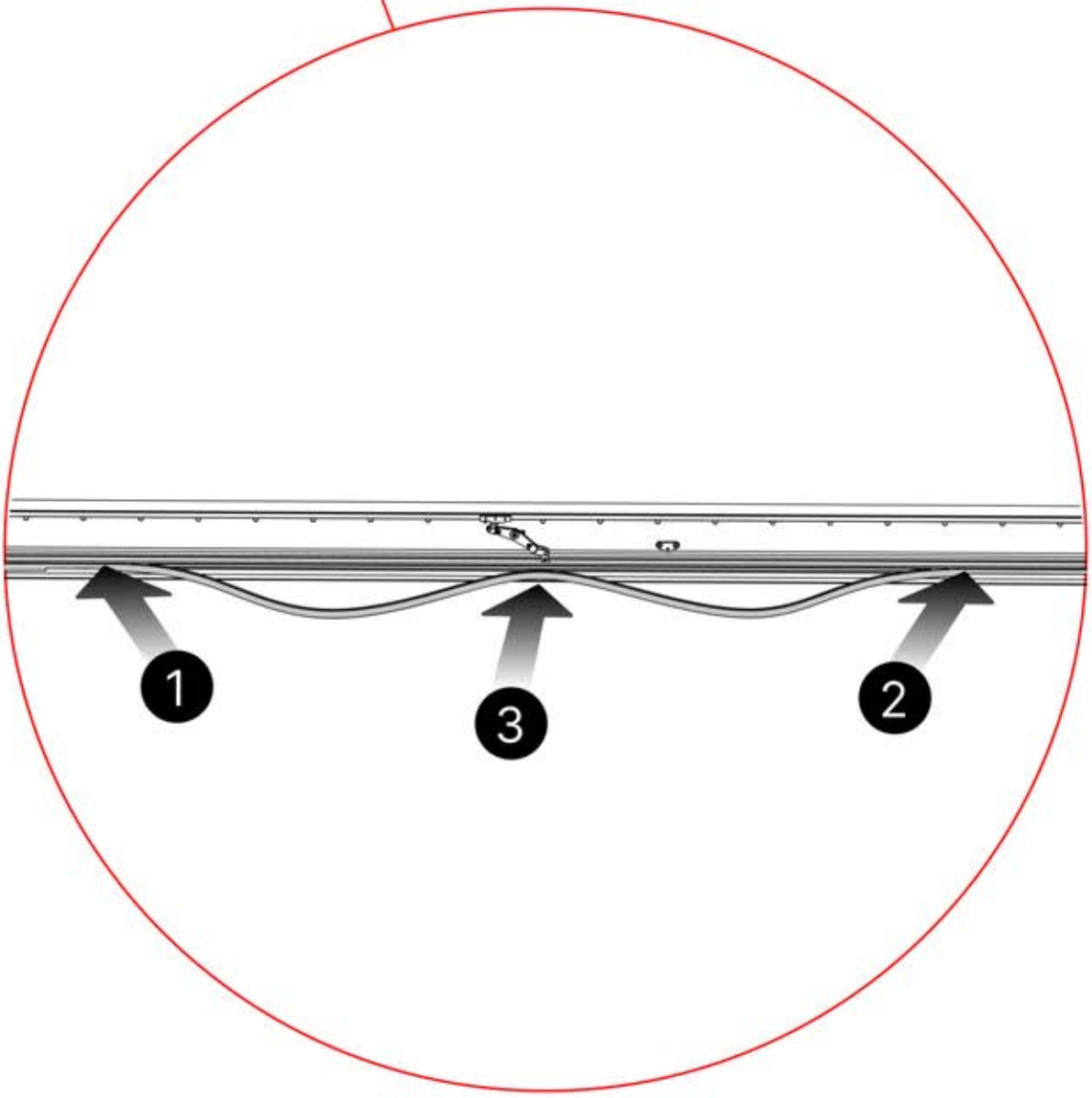

12

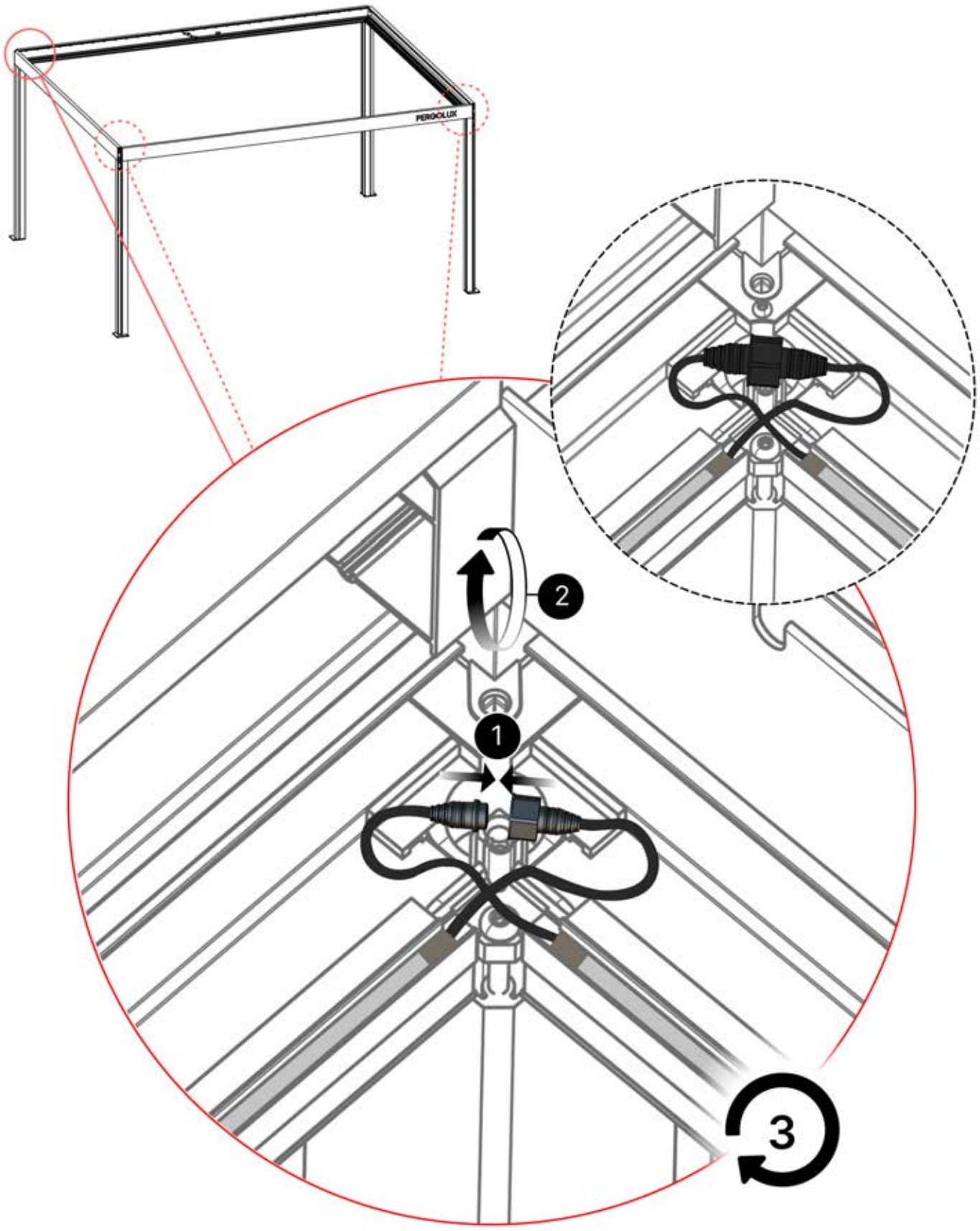

13

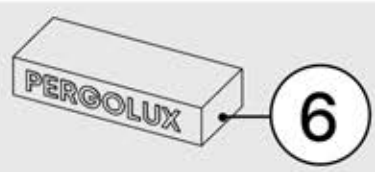

WHITE / RGB LED



Y - cable

1x

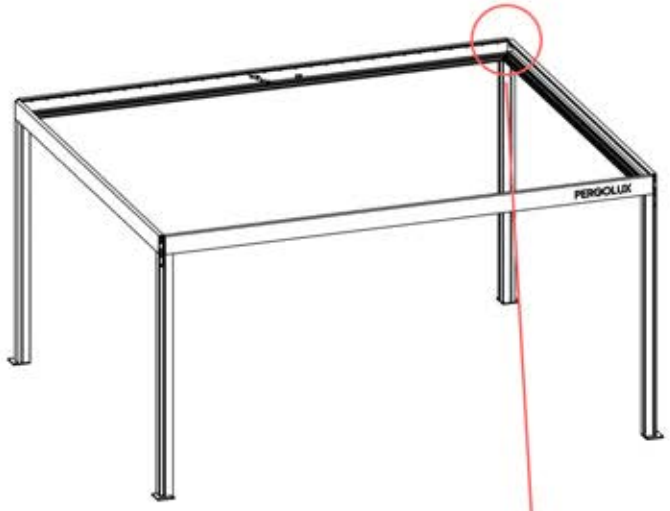

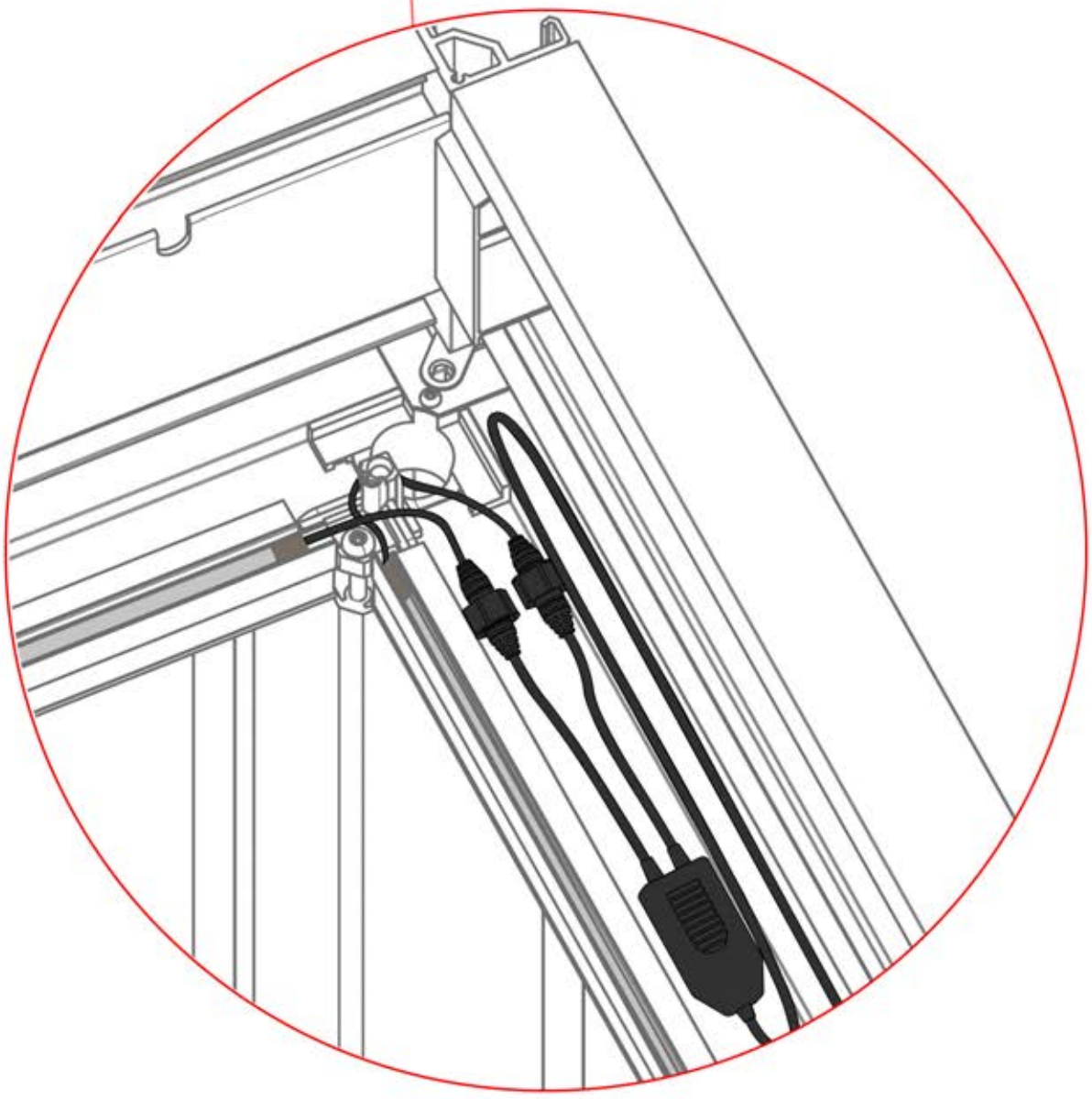

14

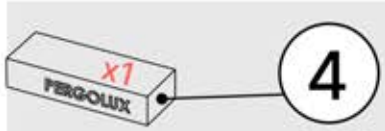

ANTHRACITE: B233
WHITE: B241
BLACK: B237



PN-200002625
4x
PN-20000 3284 Zip Bag



PN-200000960
4x
PN-20000 3379 Zip Bag

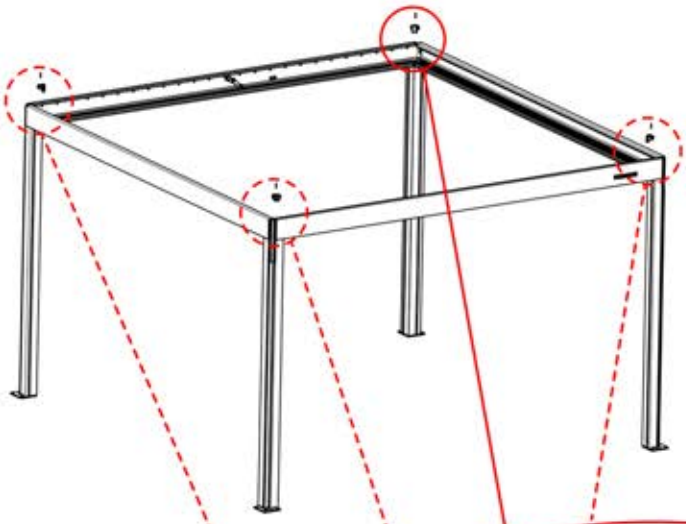

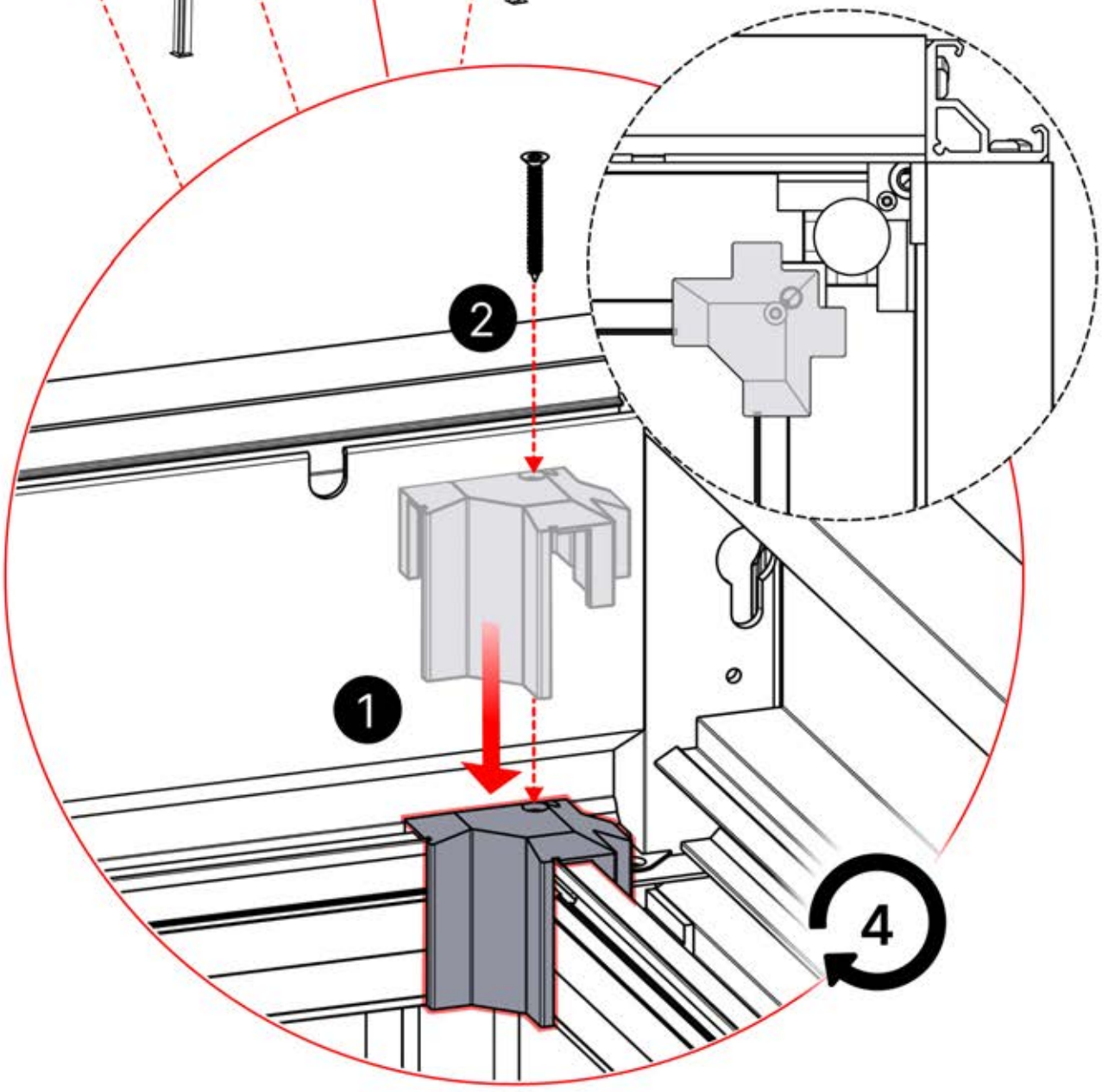

15

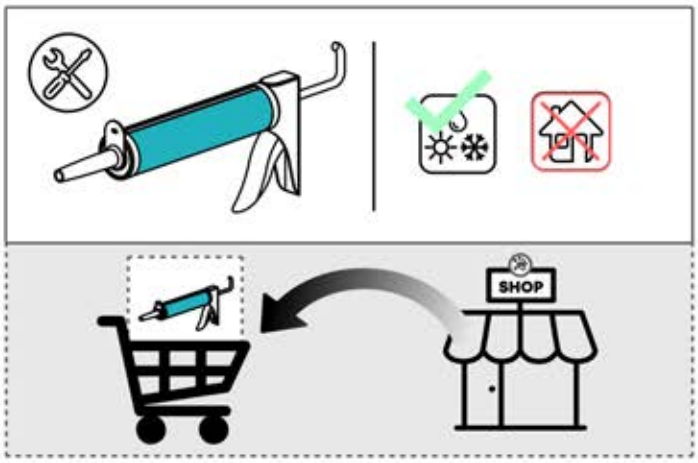
SHOP

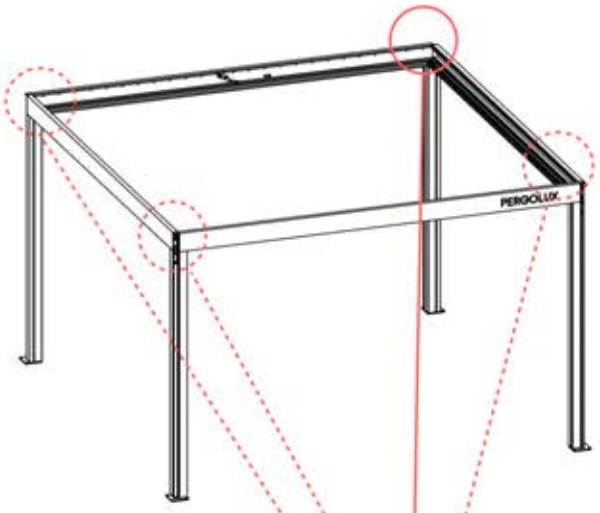
PERGOLUX

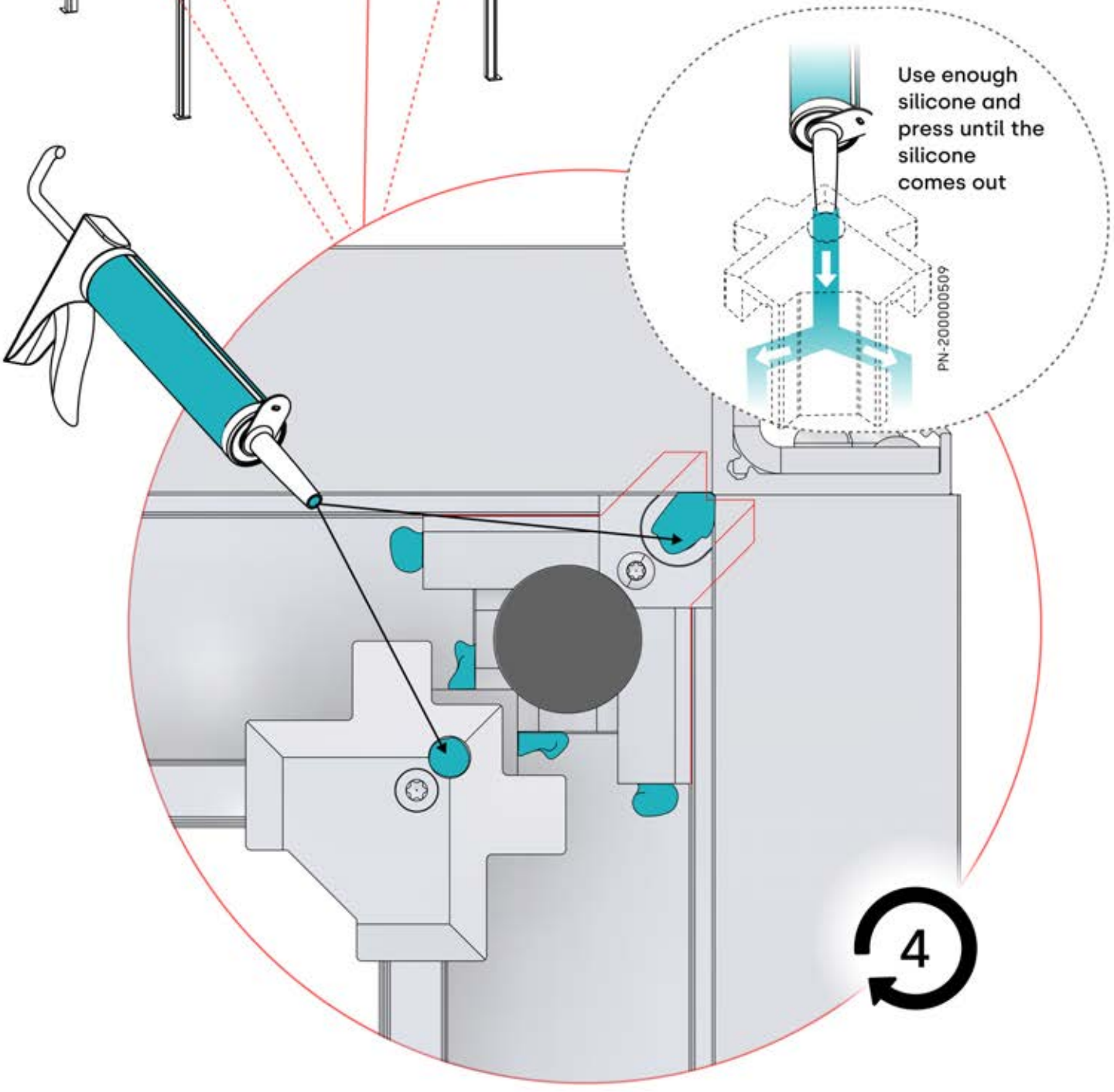
Use enough silicone and press until the silicone comes out
PN-200000509
4

16

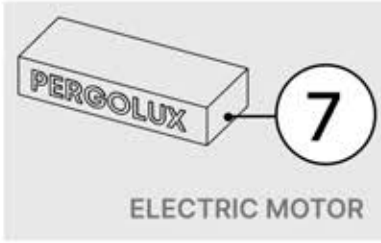

ELECTRIC MOTOR



Electric motor
PN-200001562
1x

PN-200001623

1x

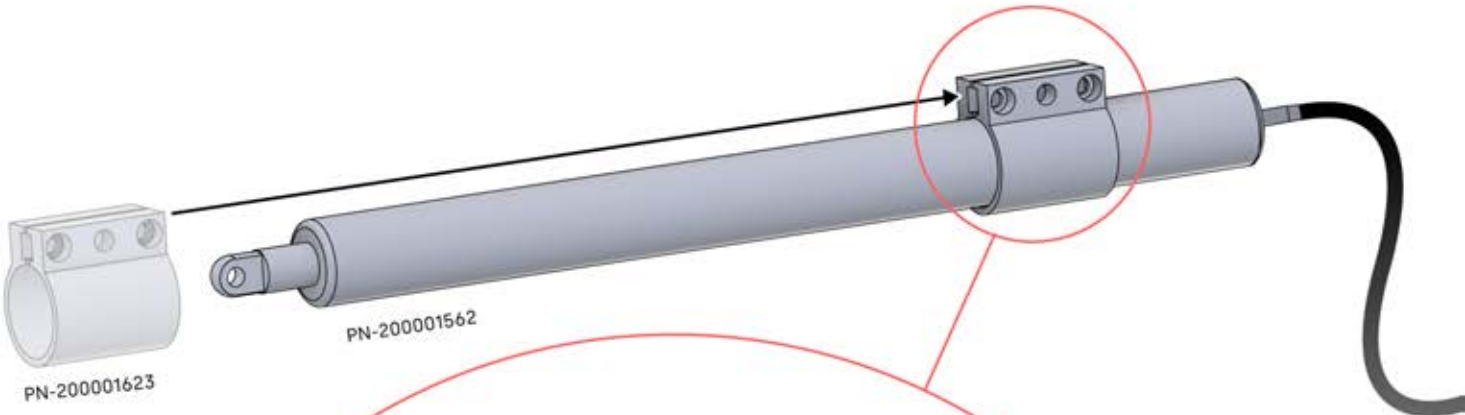

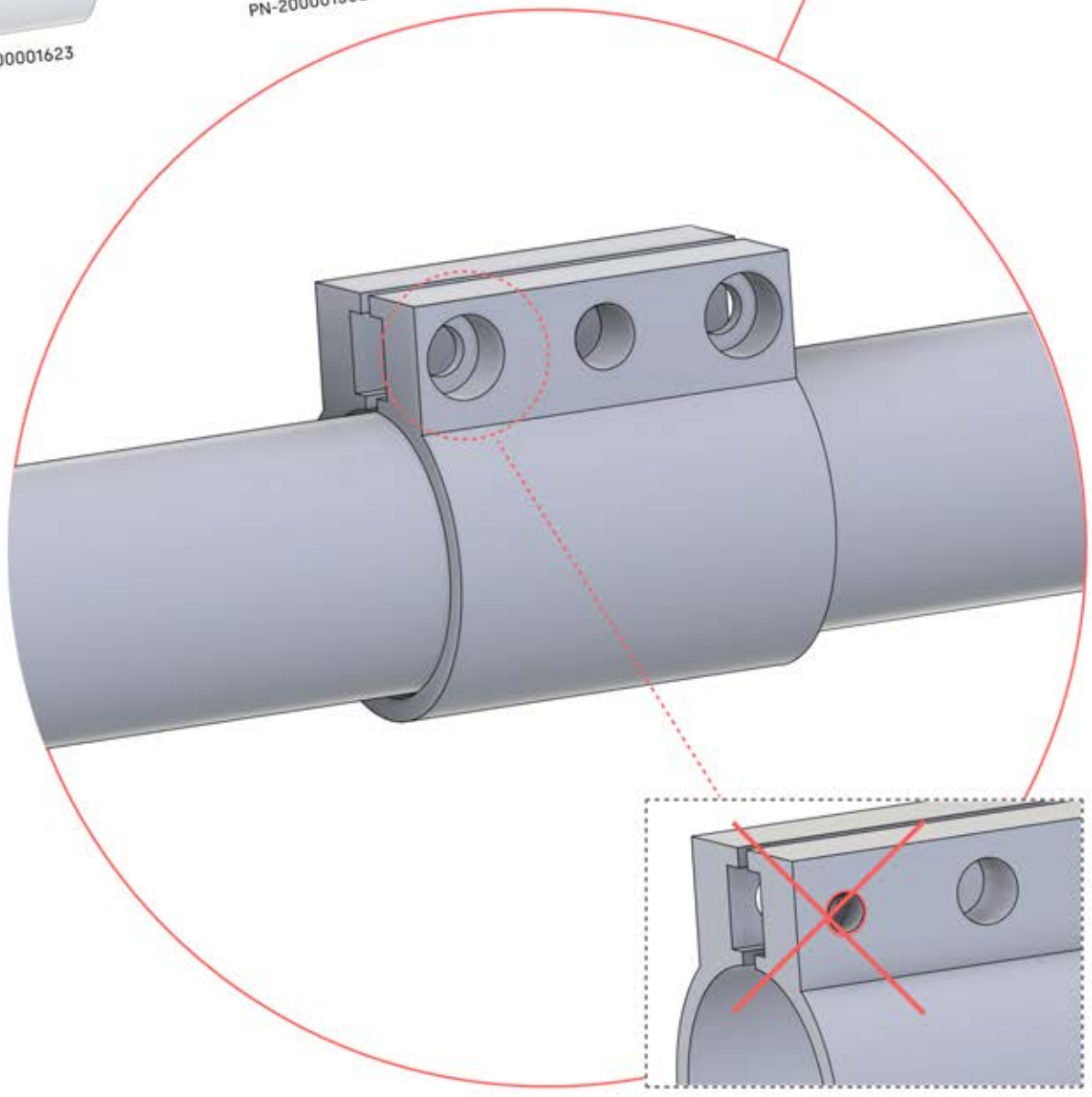

17

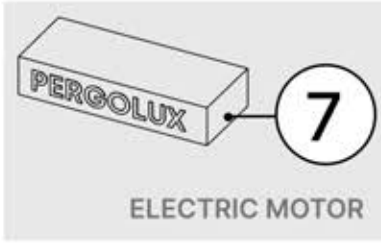

ELECTRIC MOTOR



PN-200001625

2x

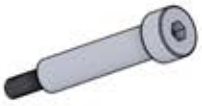

PN-200001624

1x

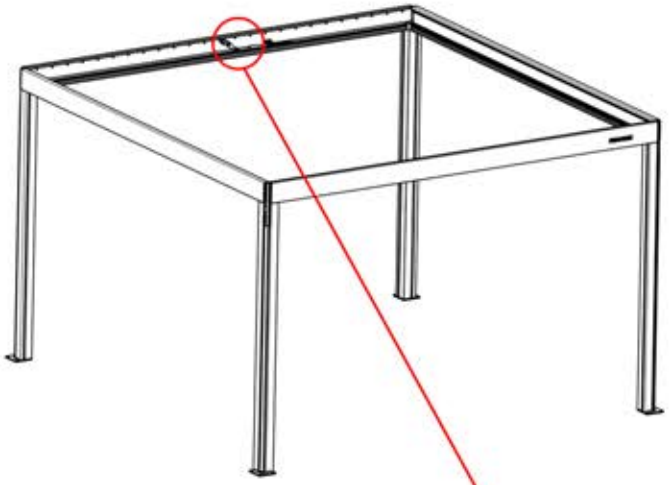

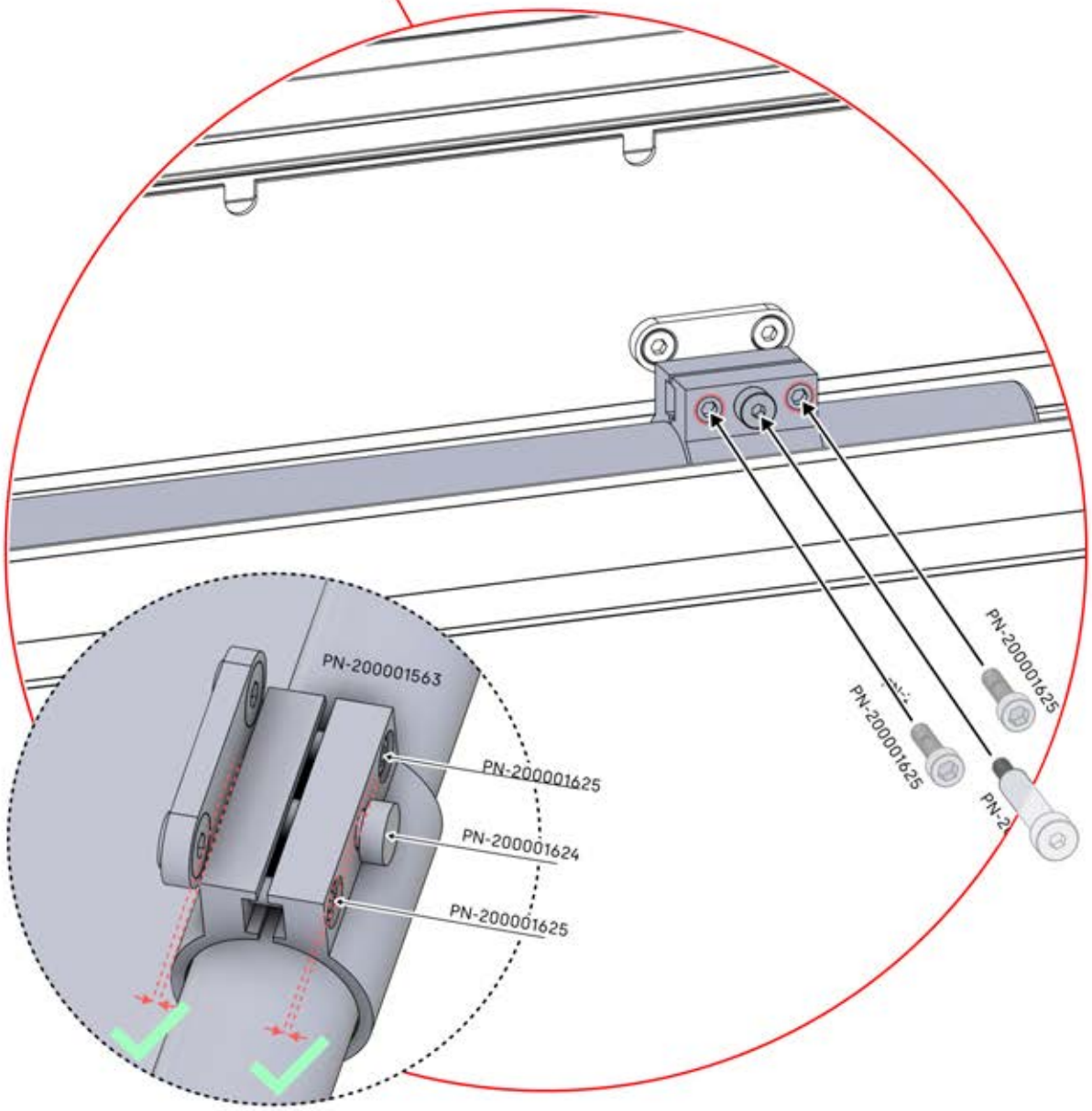

18

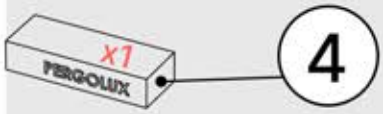

ANTHRACITE: B233
WHITE: B241
BLACK: B237



PN-200003372
1x



PN-200000502
1x



PN-200003373
1x



PN-200000561
1x

PN-20000
3371 Zip Bag

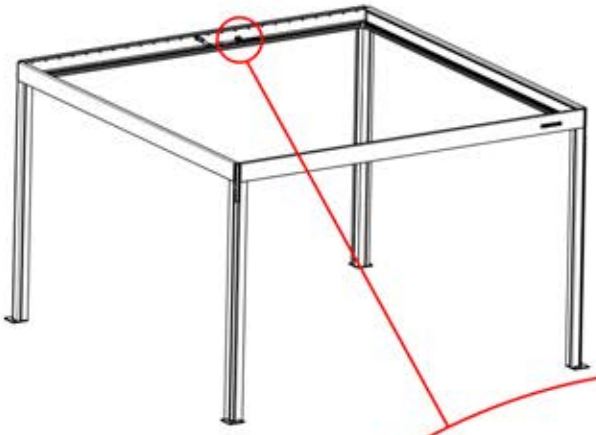

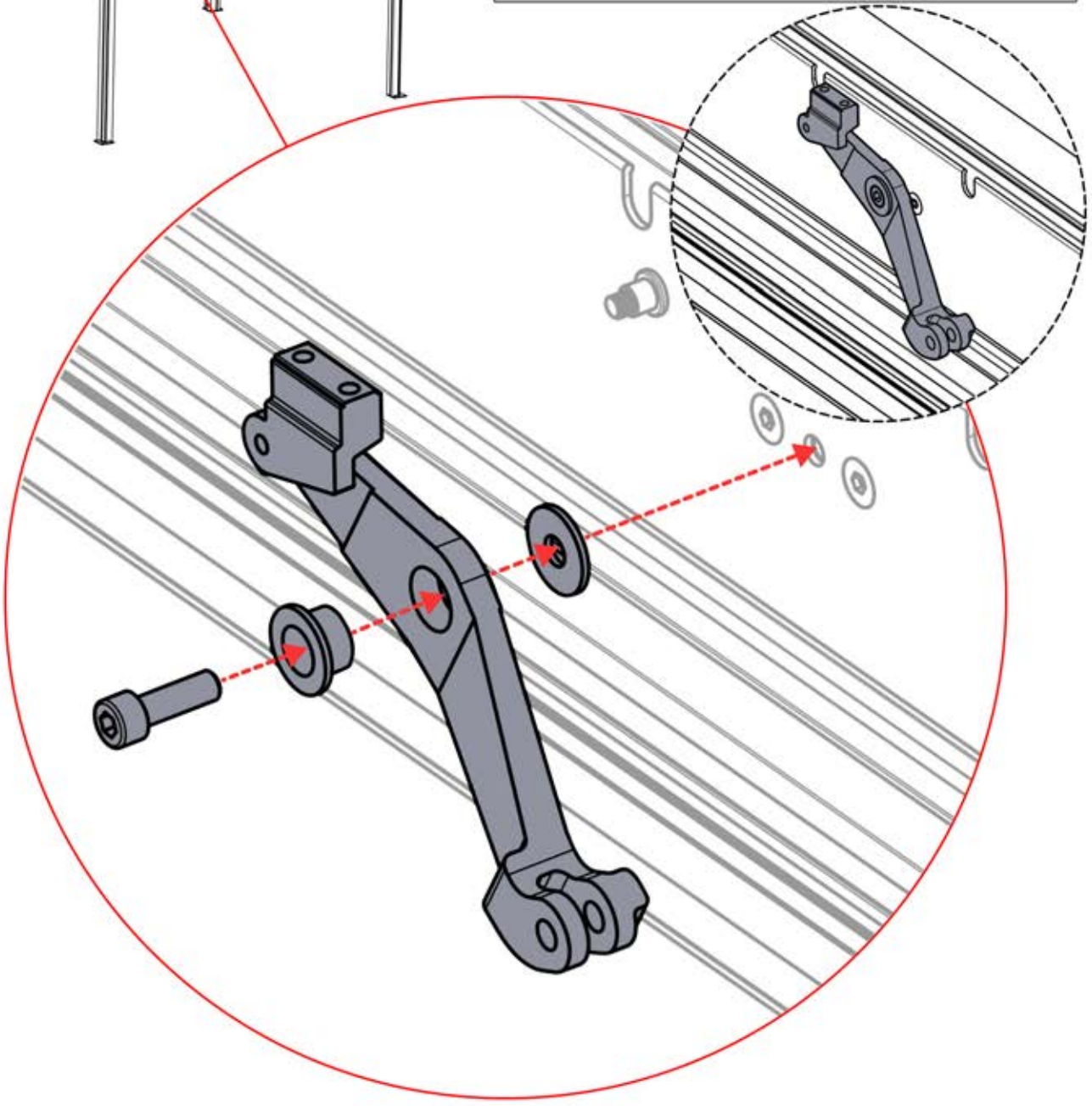

19

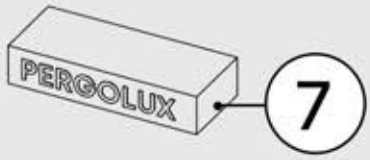

7

ELECTRIC MOTOR



4

ANTHRACITE: B233
WHITE: B241
BLACK: B237



PN-200001562
1x



PN-200001946
1x

PN-20000
3371 Zip Bag

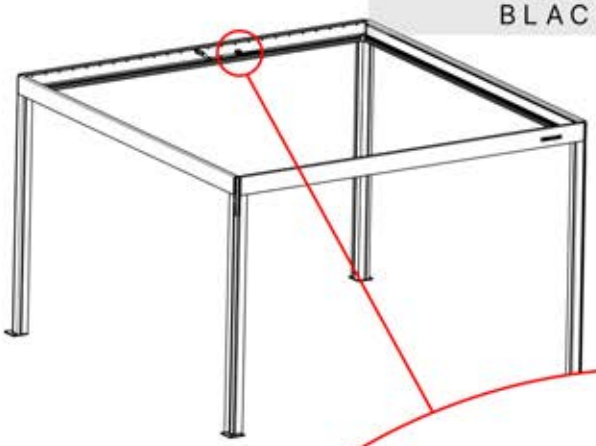

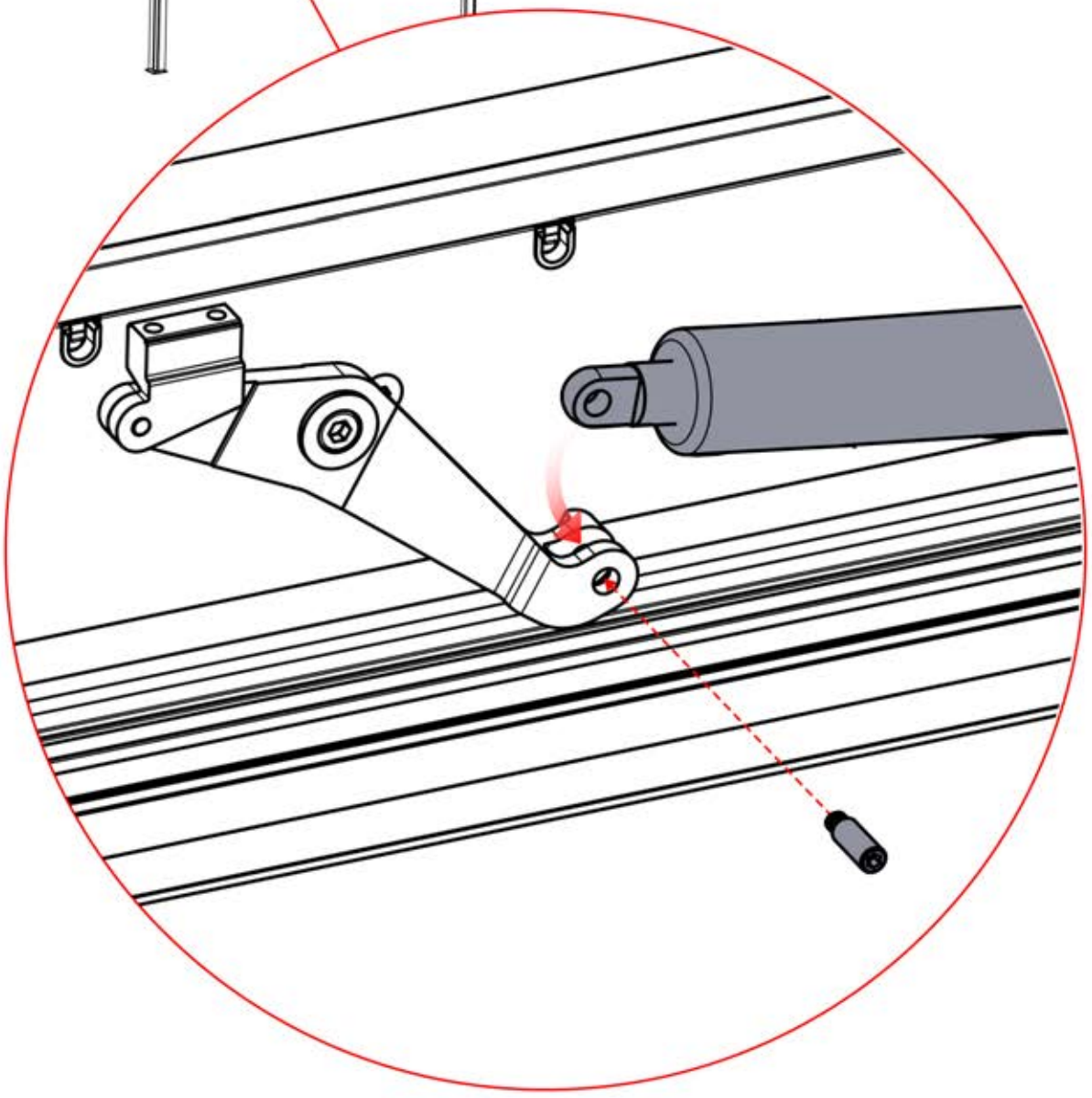

EIN- UND AUSGÄNGE

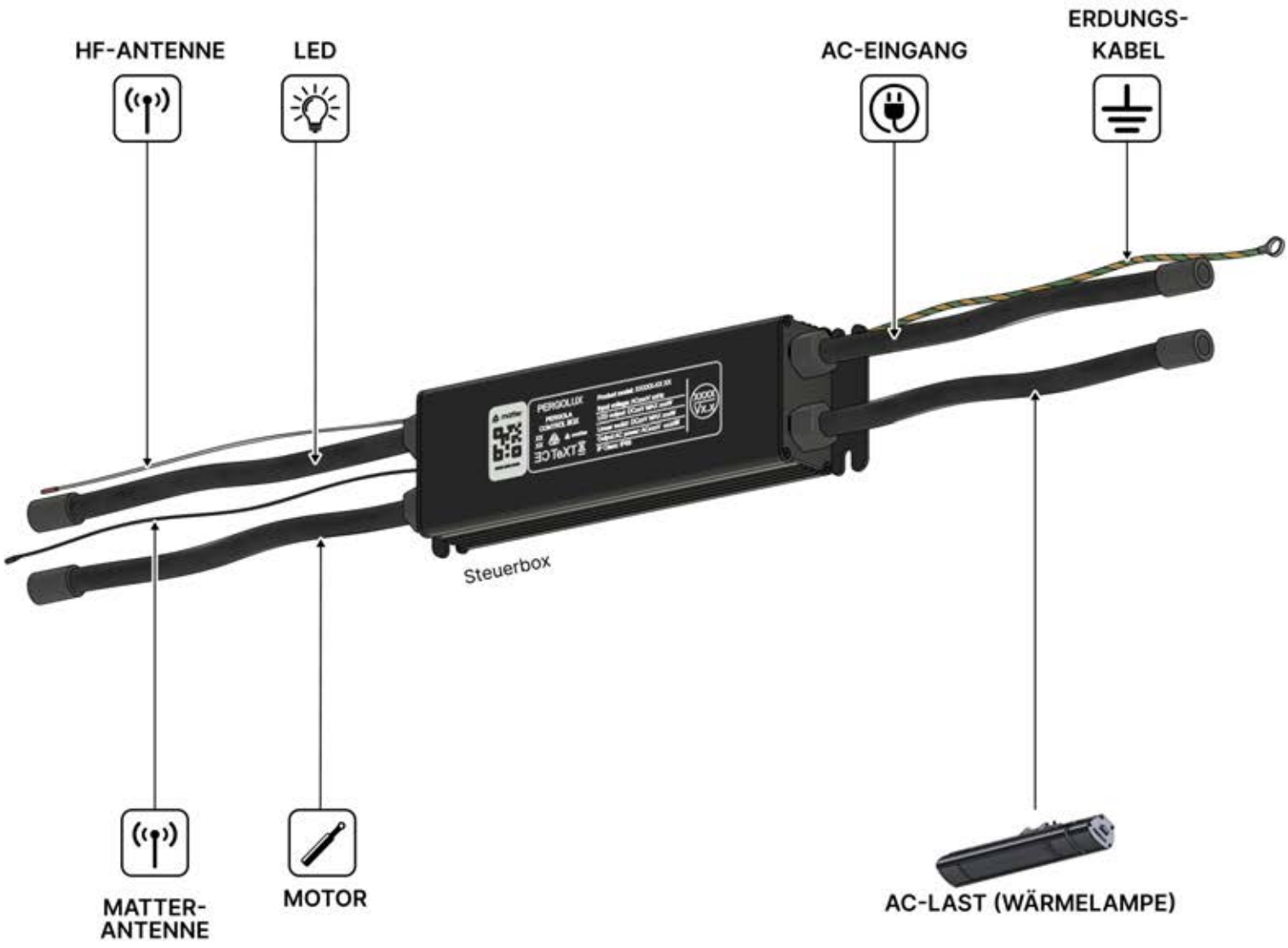

20

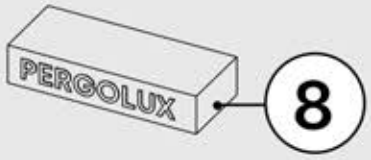

CONTROL BOX



Control box

1x

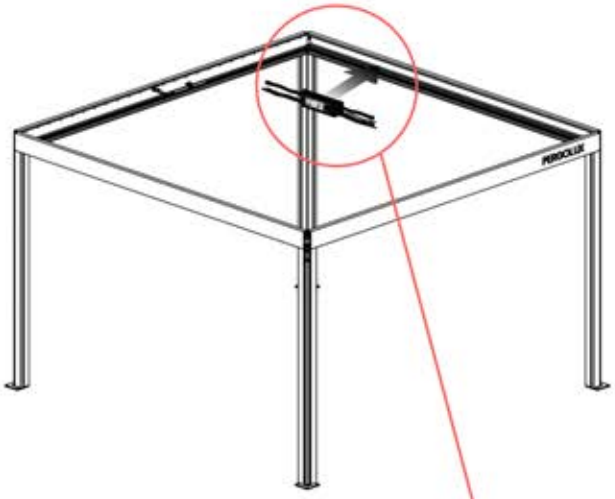

Control Box can be installed on Preferred W BEAM

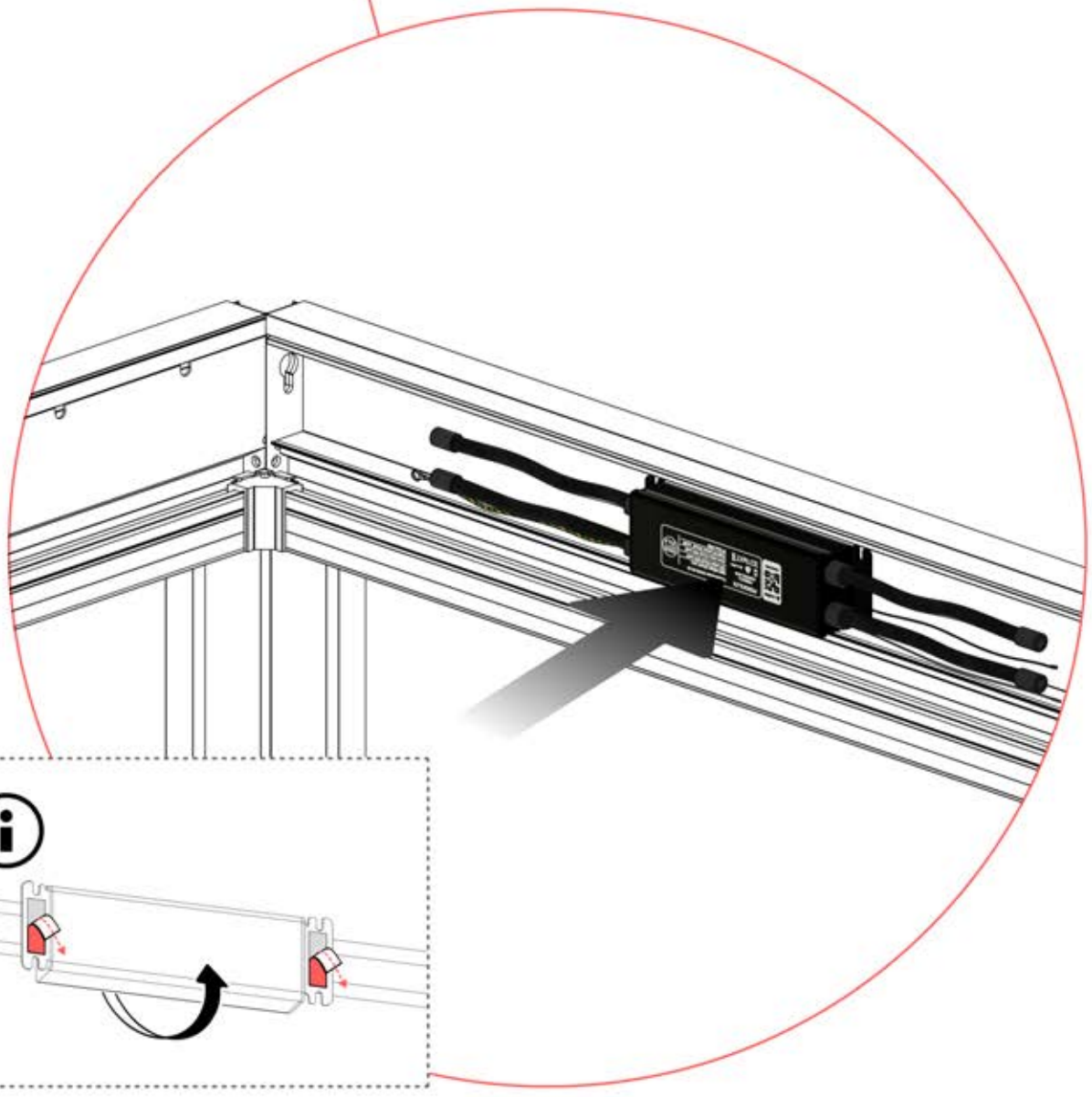

21

Connect grounding wire before connecting to power!



GROUNDING

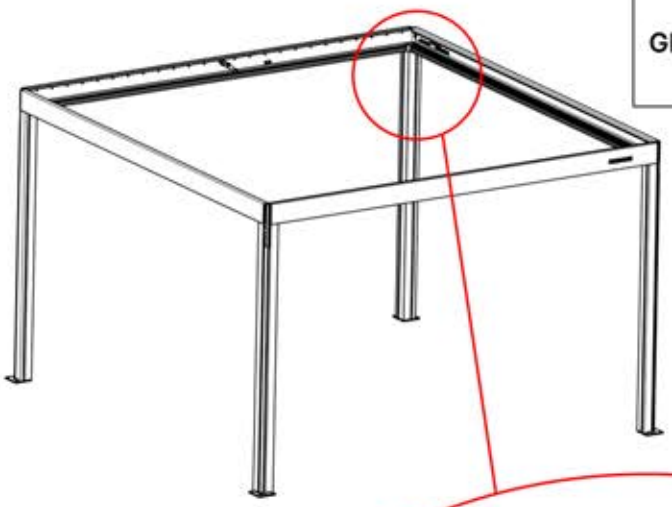

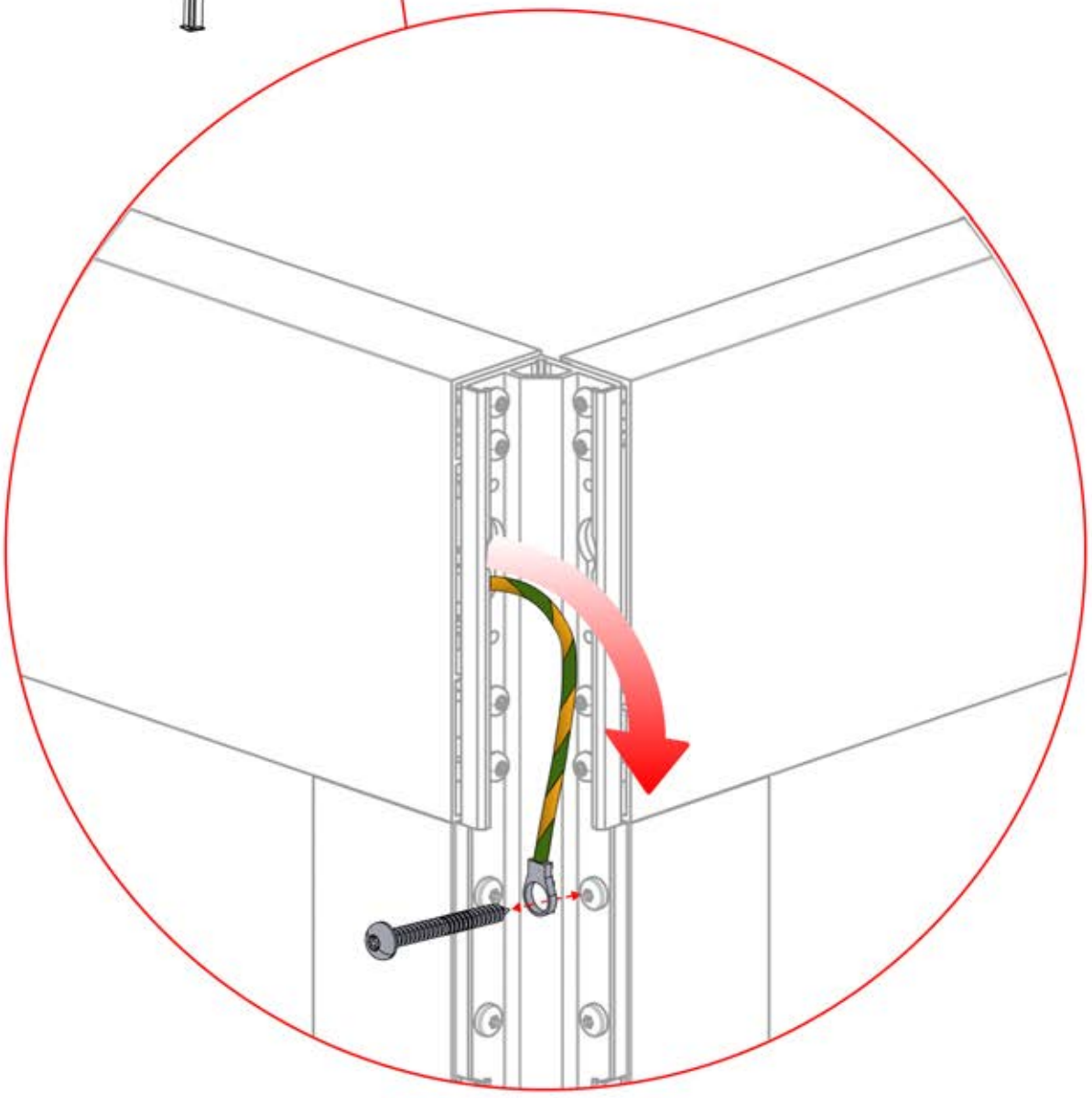

22

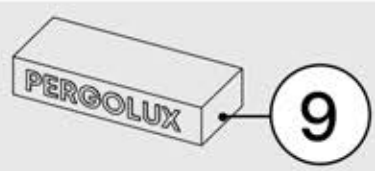

POWER CABLE



Power cable

1x

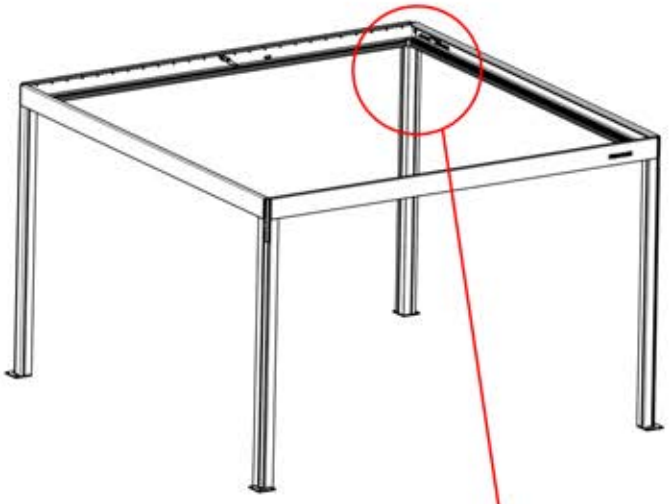

Power Cable can be routed through all the Poles.

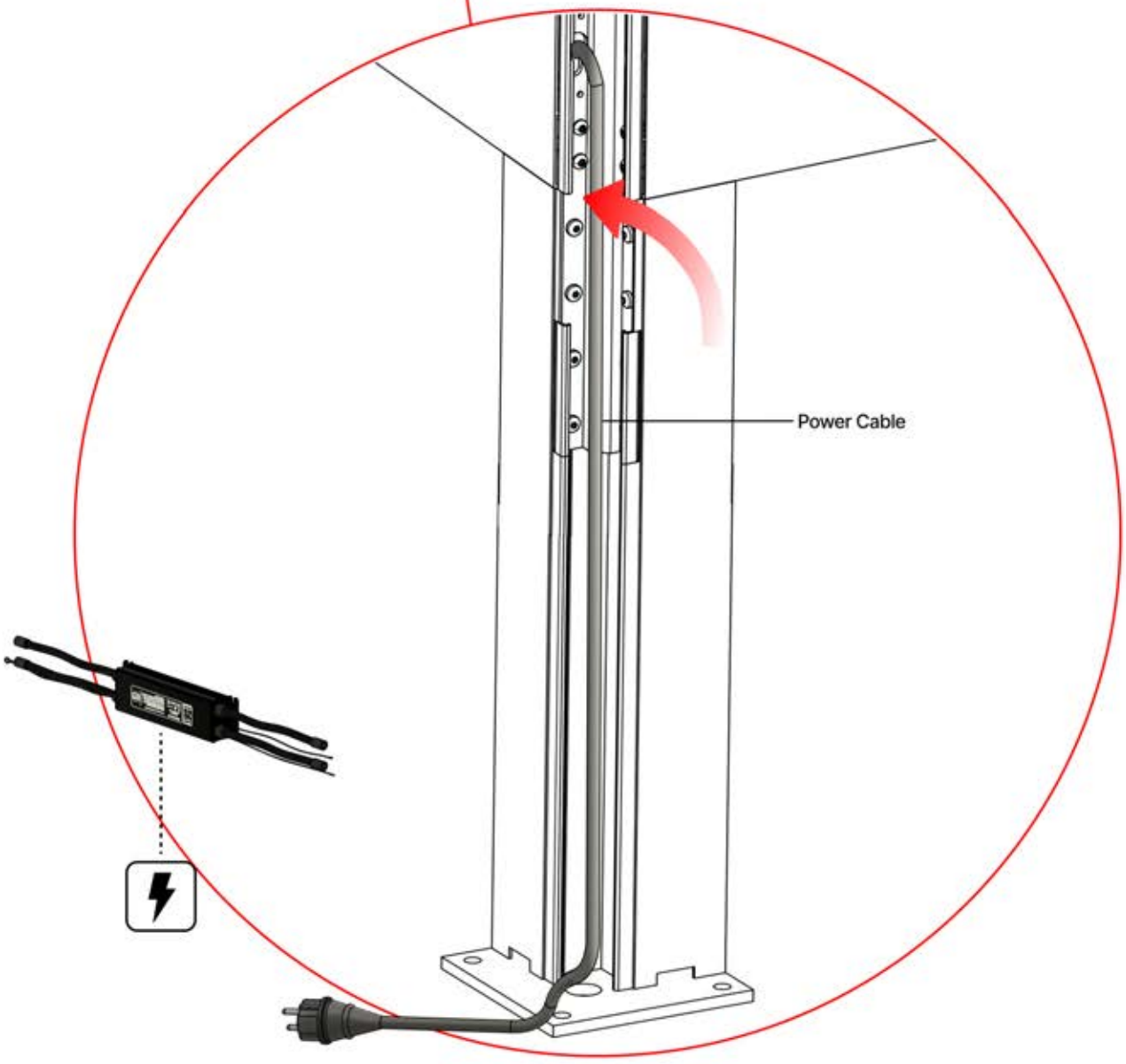

23

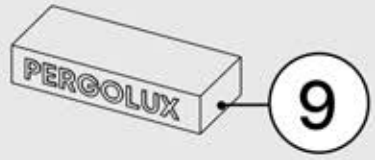

POWER CABLE



Power cable

1x

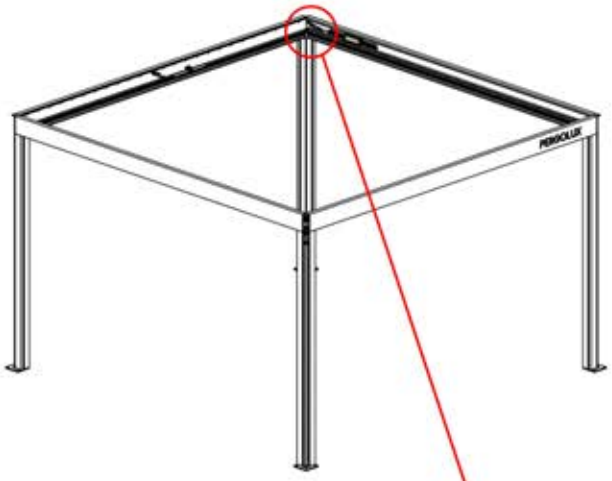

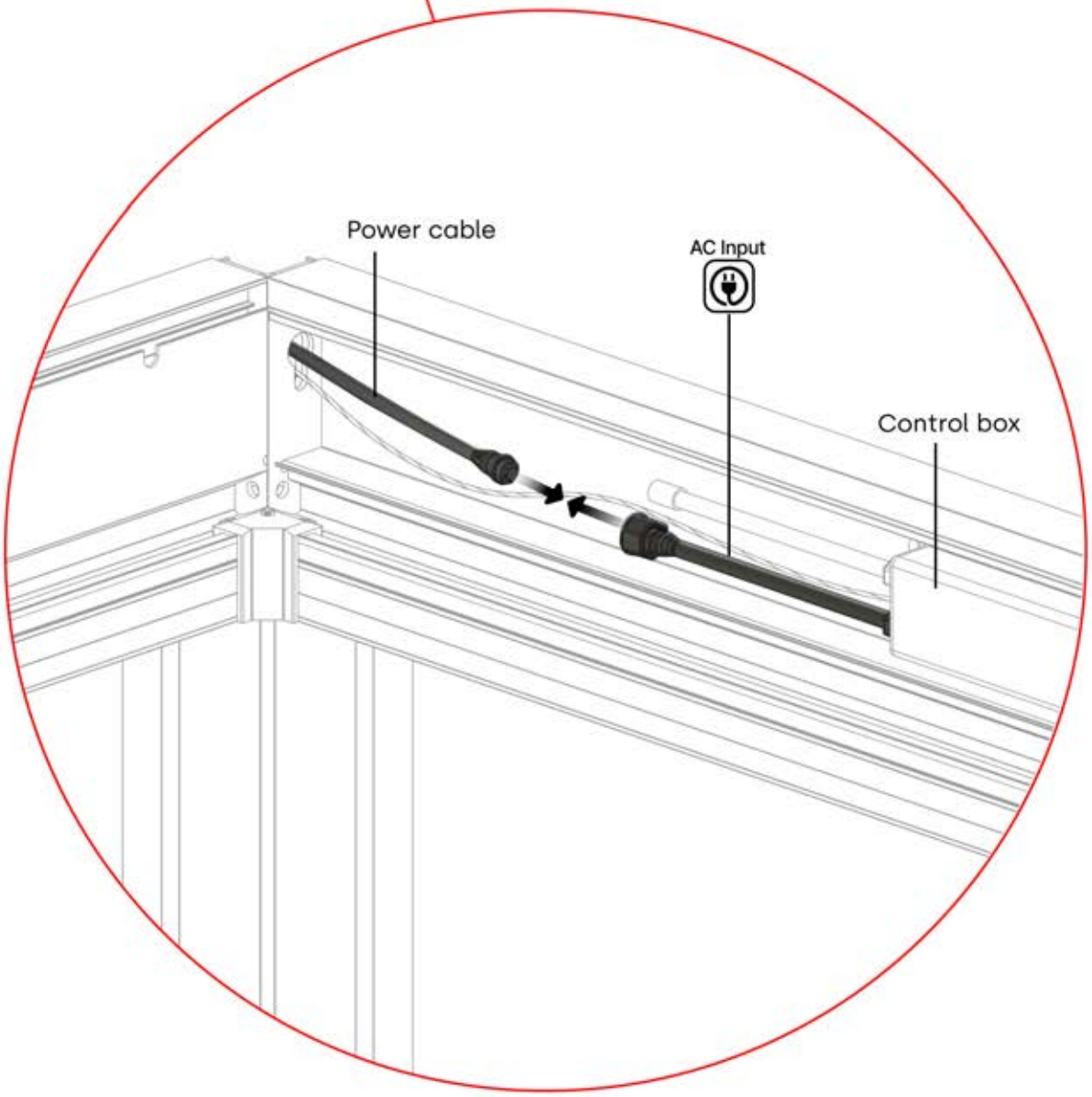

24

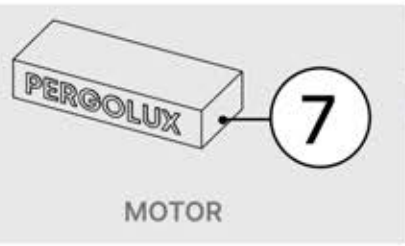

MOTOR



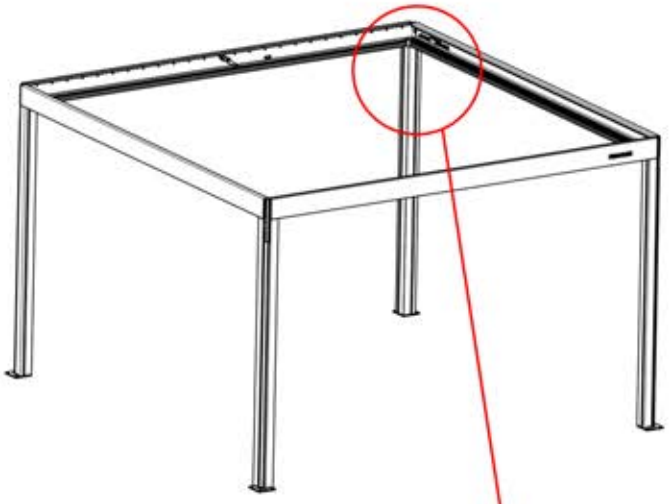

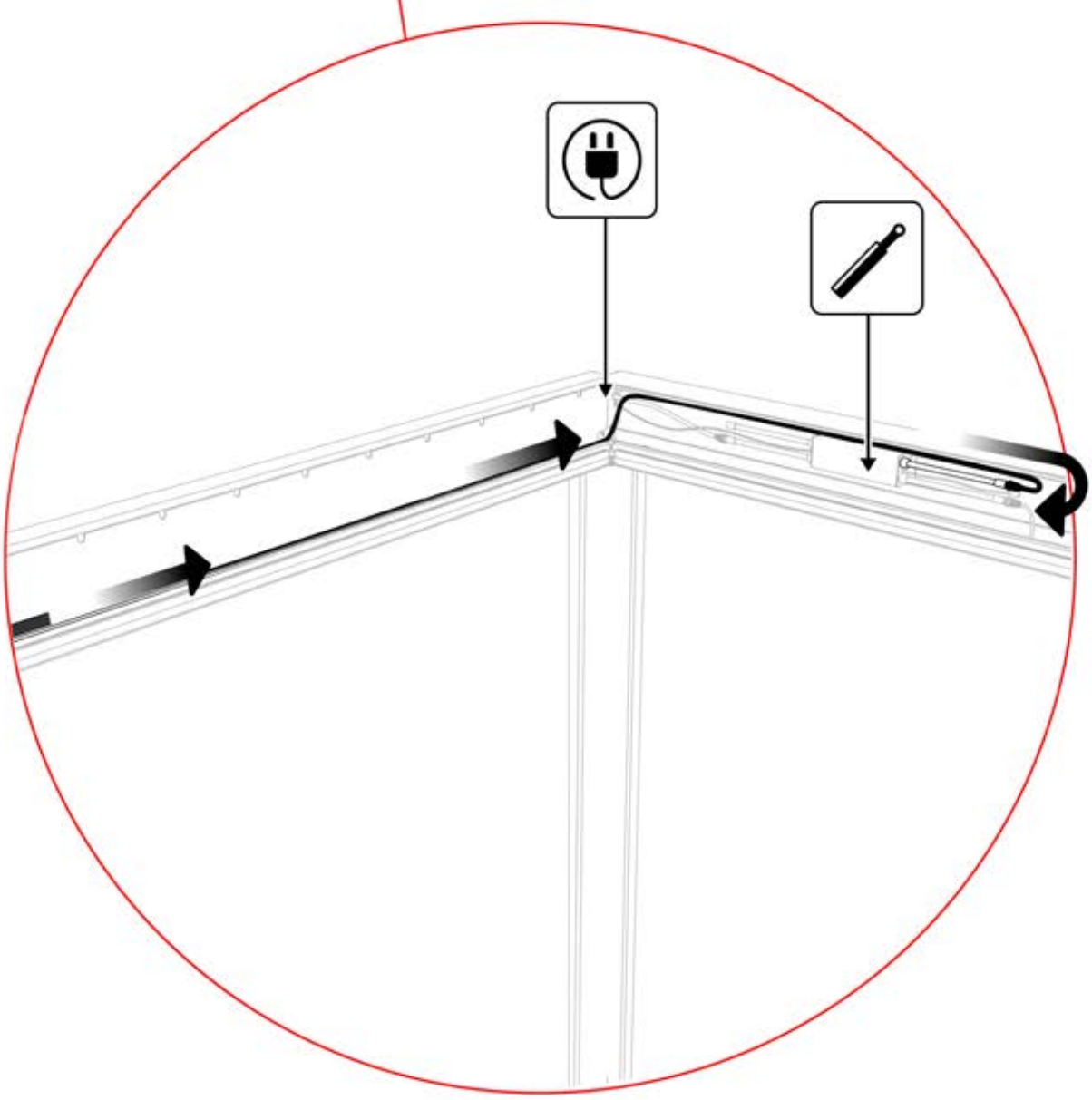

1

If you are going to install a heater, do it now.

Follow the instructions in the heater assembly manual.

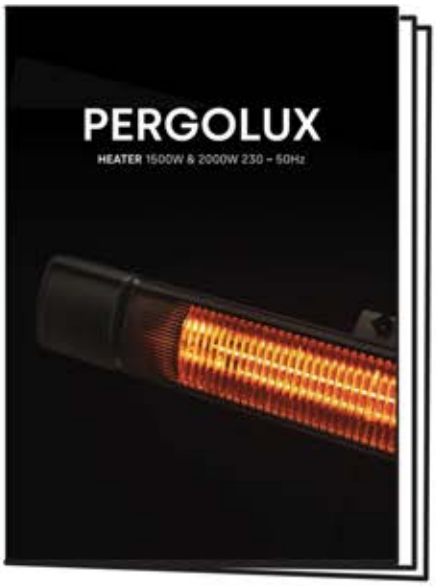

2

It's time to connect the motor and LED lights to the pergola control box.

Follow the instruction in the assembly manual.



26

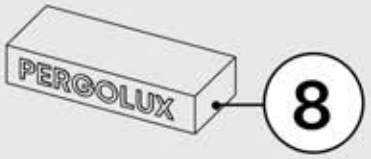

CONTROL BOX

Keep the Matter Antenna wire free and do not tie them with LED and Motor wire

S4



PN-200002683

5x



PN-200002684

10x

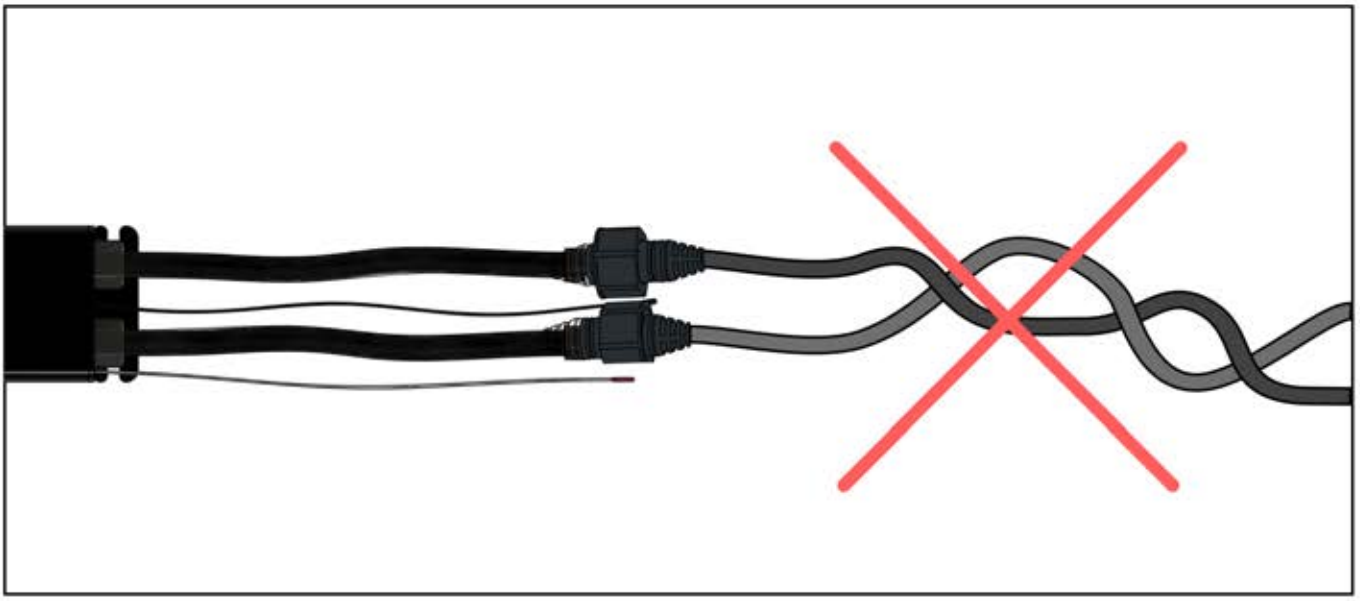

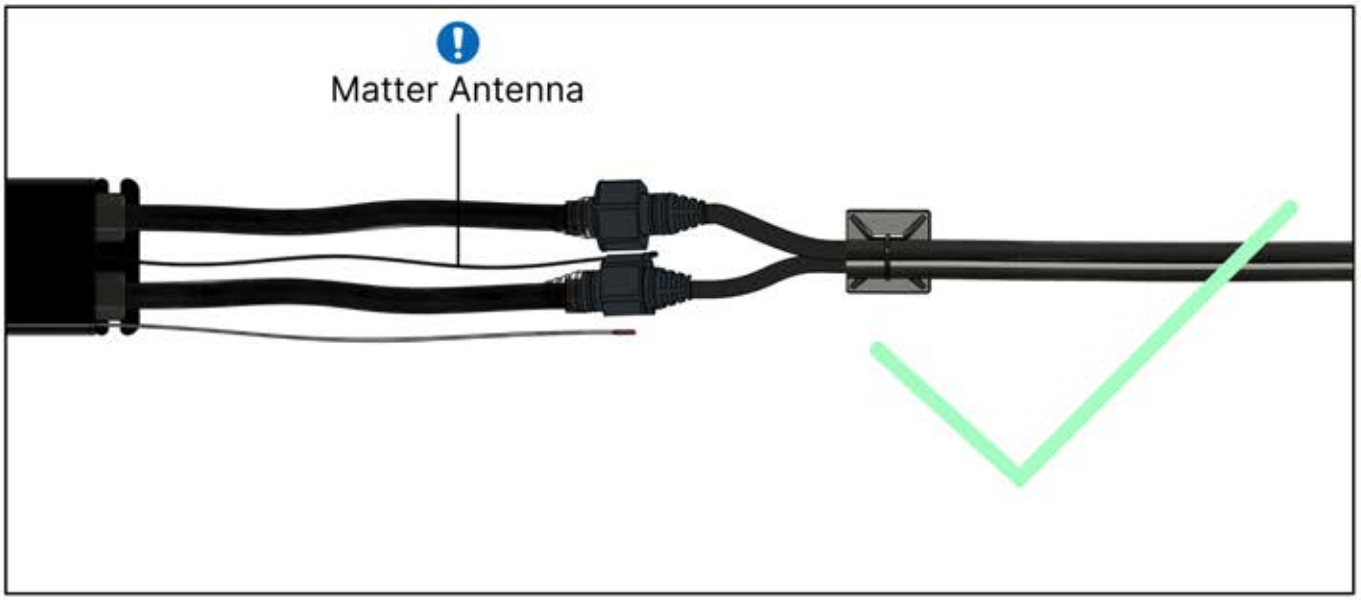

27

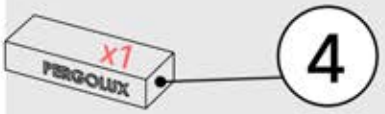

ANTHRACITE: B233
WHITE: B241
BLACK: B237





PN-200002622
4x

PN-20000
3281
Zip Bag

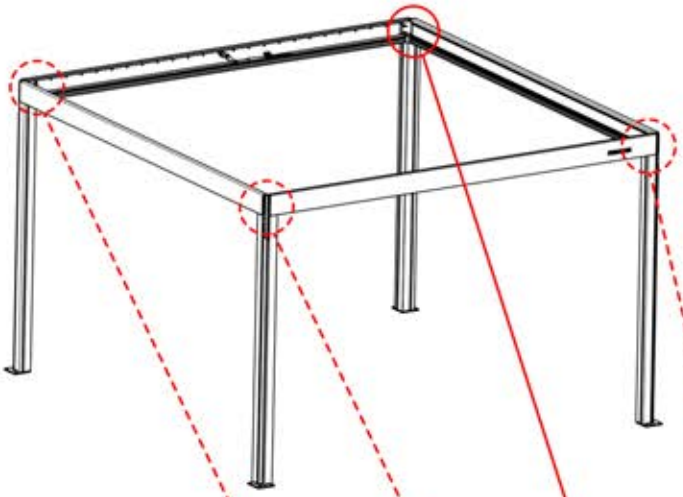

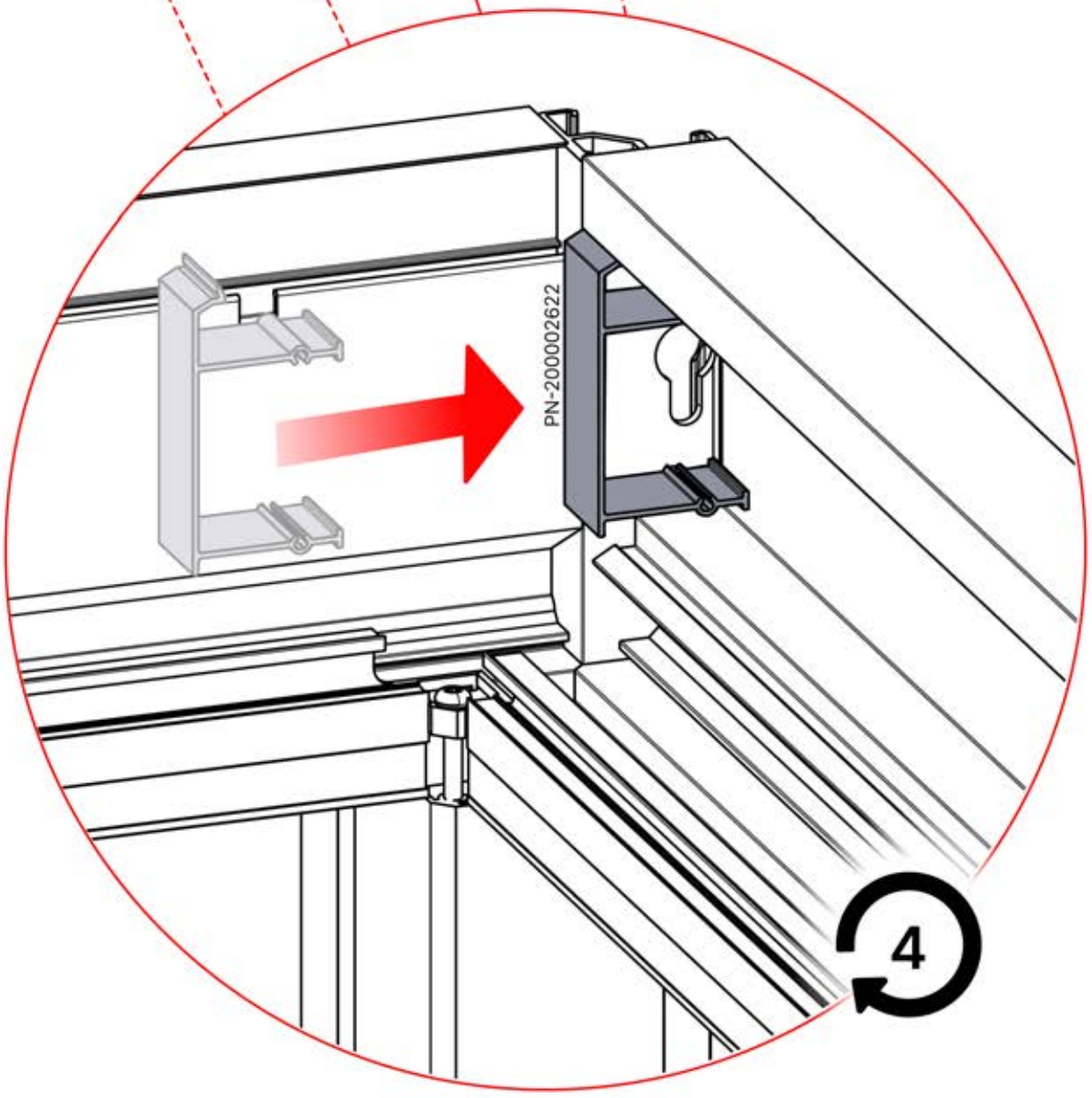

28

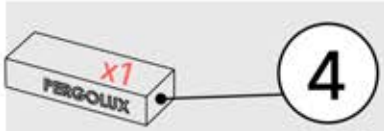

ANTHRACITE: B233
WHITE: B241
BLACK: B237



PN-200000680
8x

PN-20000
3281 Zip Bag

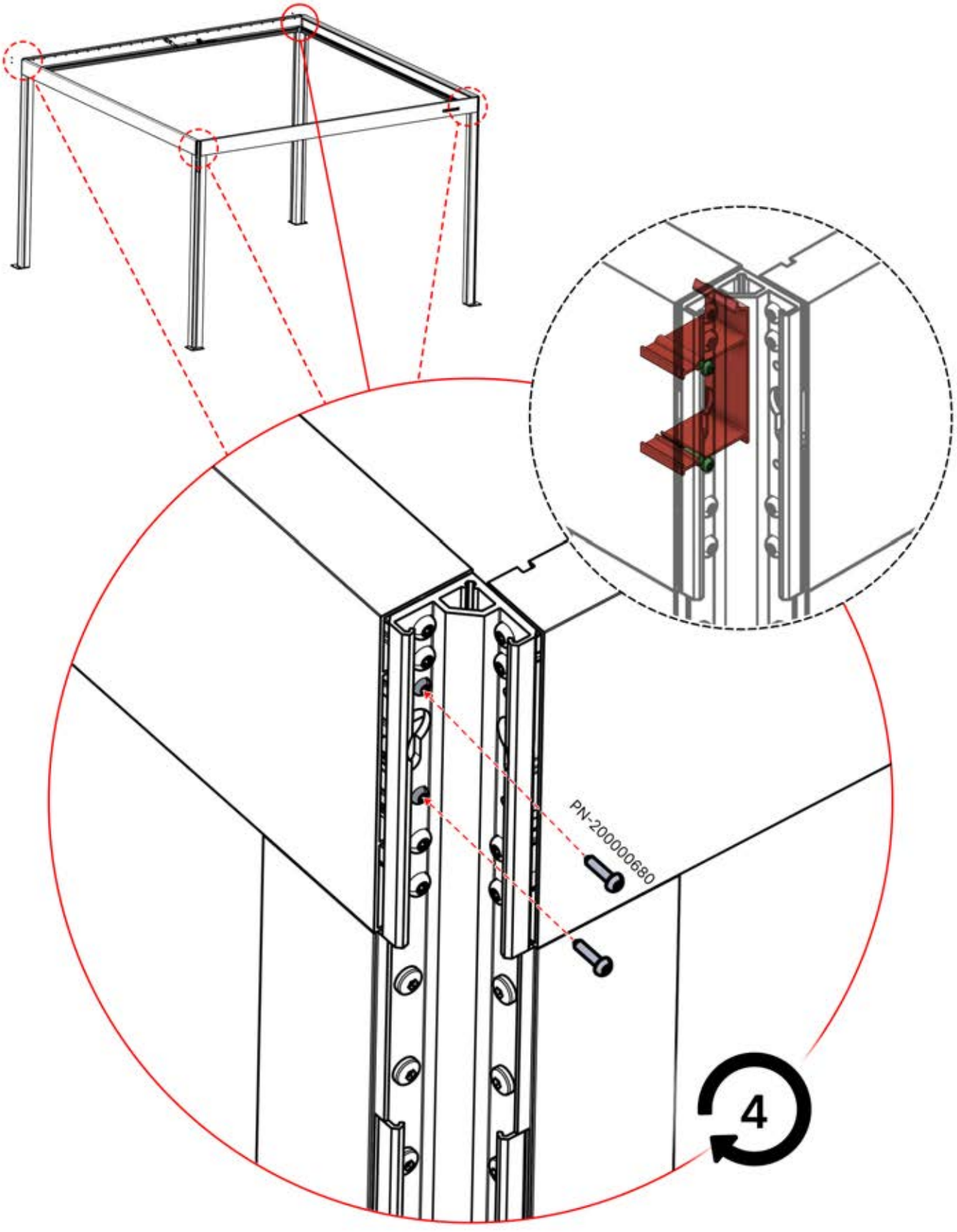

29

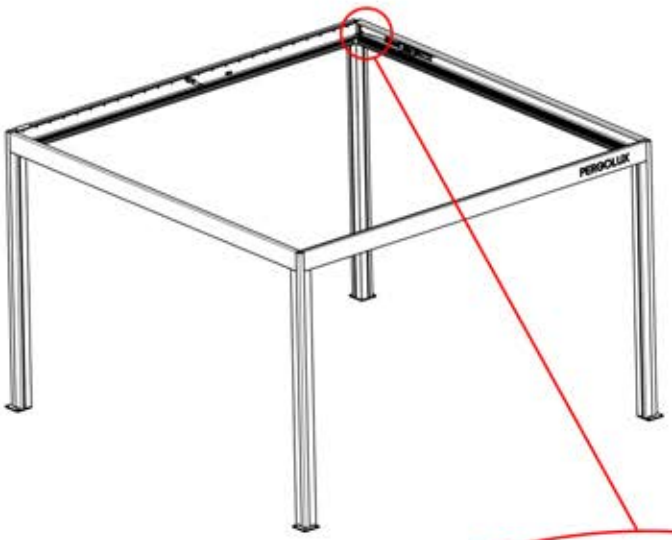

Route the Matter Antenna and place it below the highlighted part(PN-200002622).

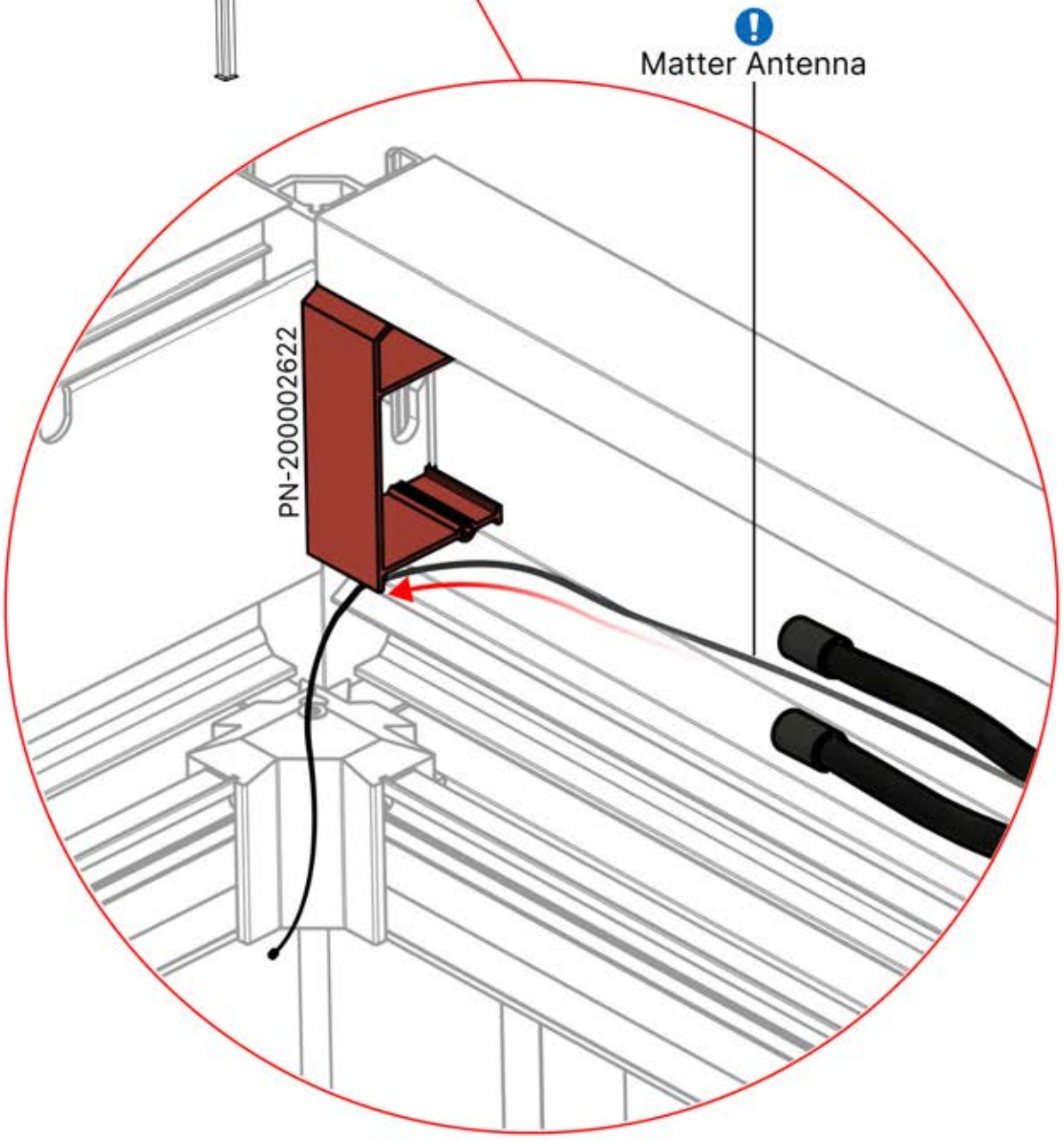

30

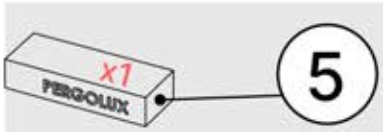

5

ANTHRACITE: B257
WHITE: B261
BLACK: B259

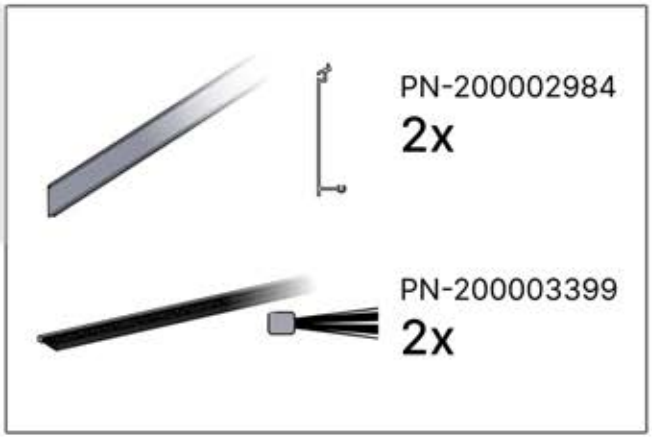

PN-200002984
2x

PN-200003399
2x

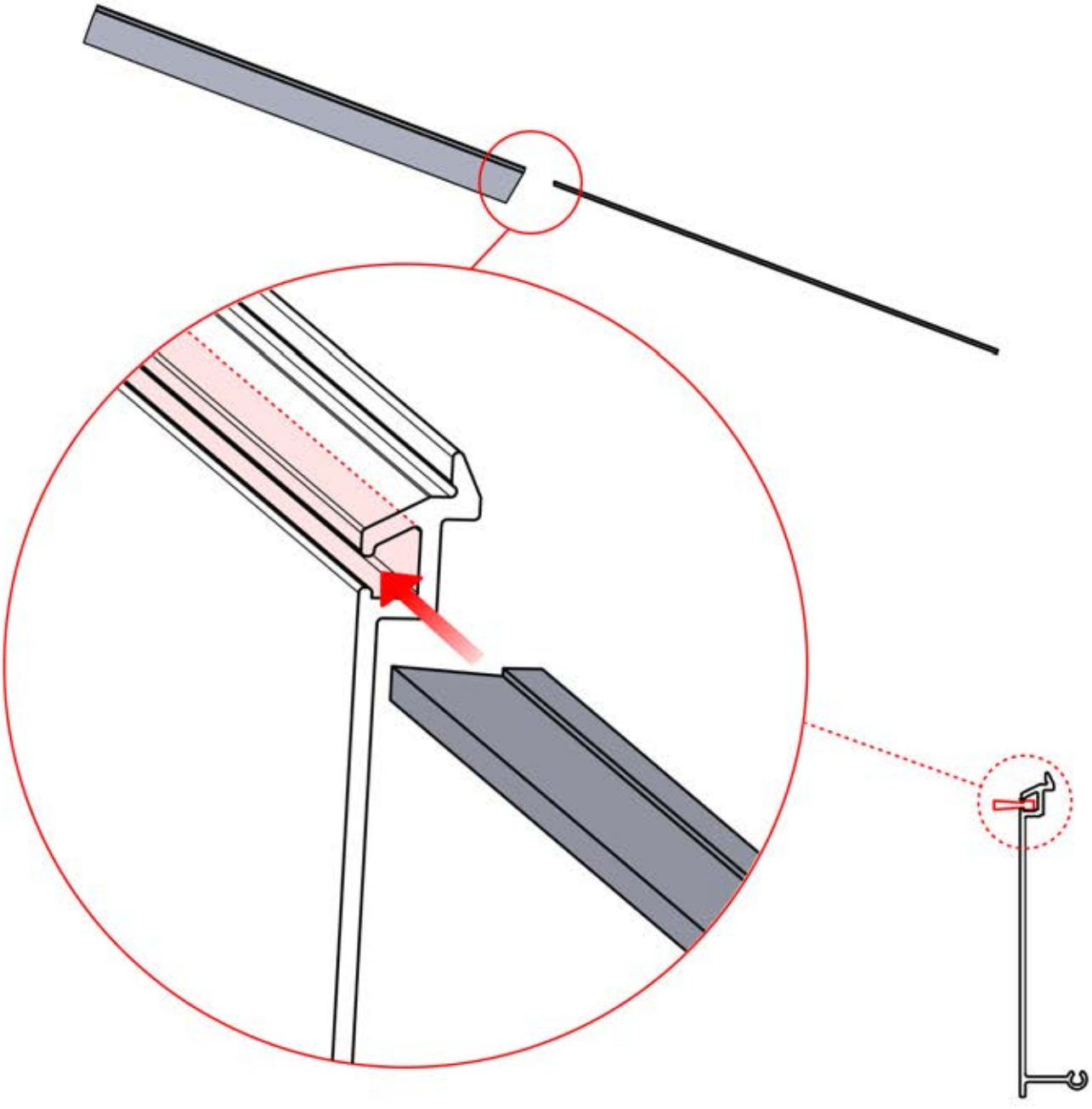

31

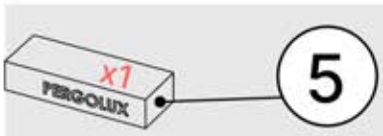

ANTHRACITE: B257
WHITE: B261
BLACK: B259



PN-200002984
2x

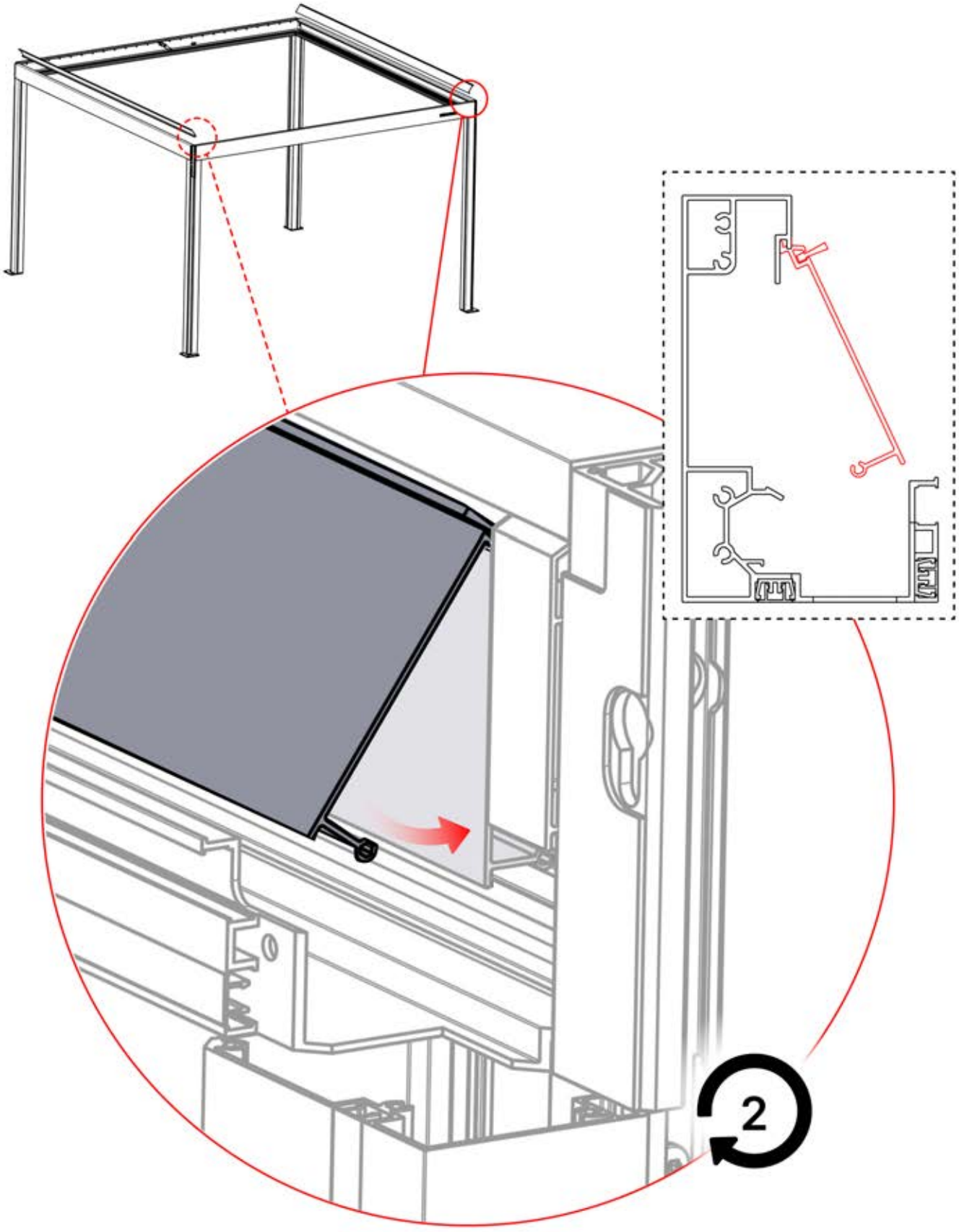

INFORMATION

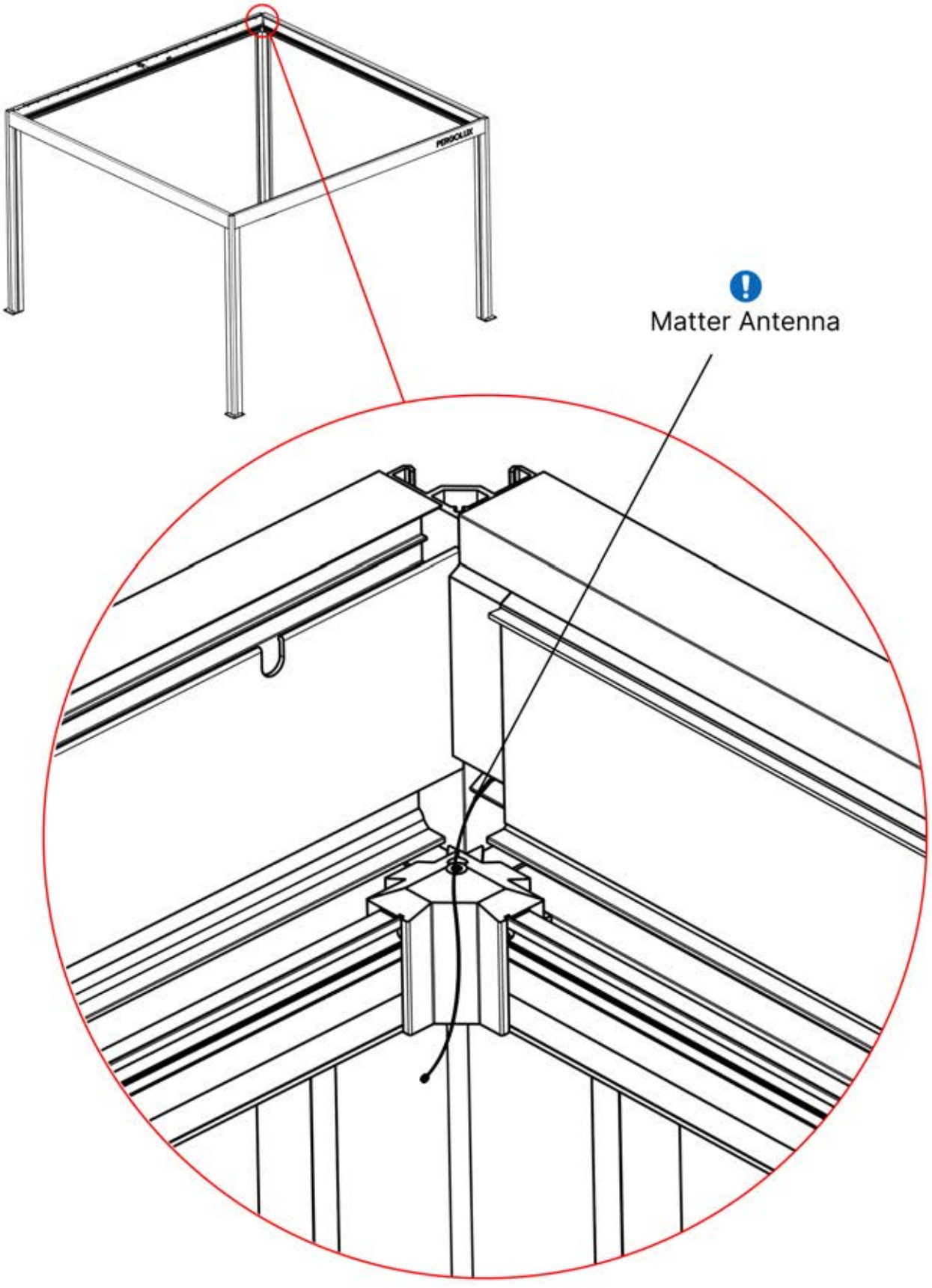

32



Matter Antenna

1x



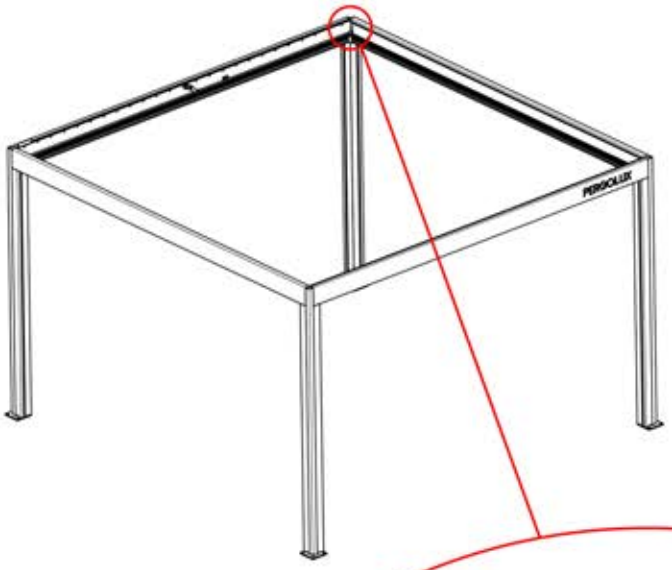

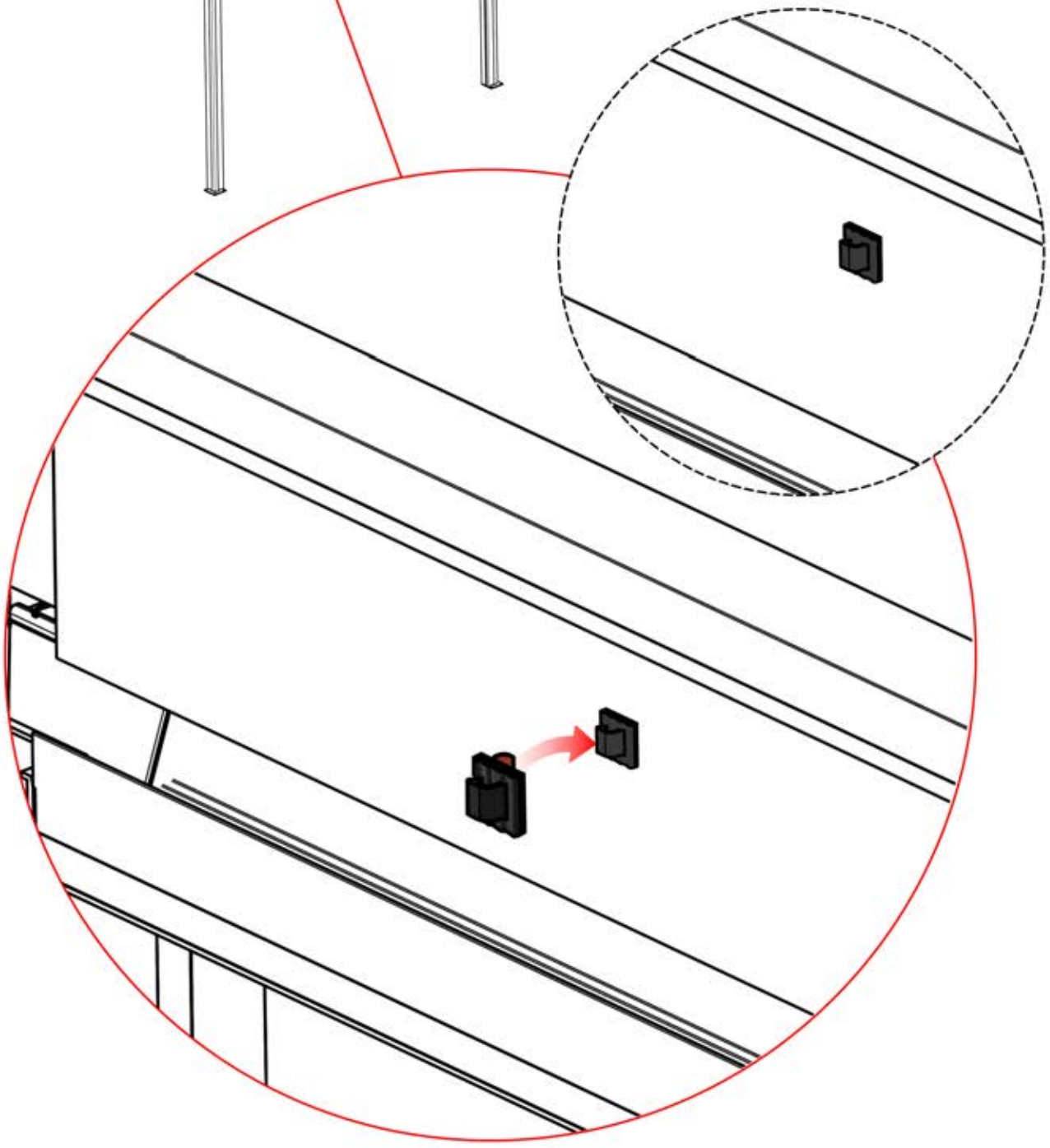

33

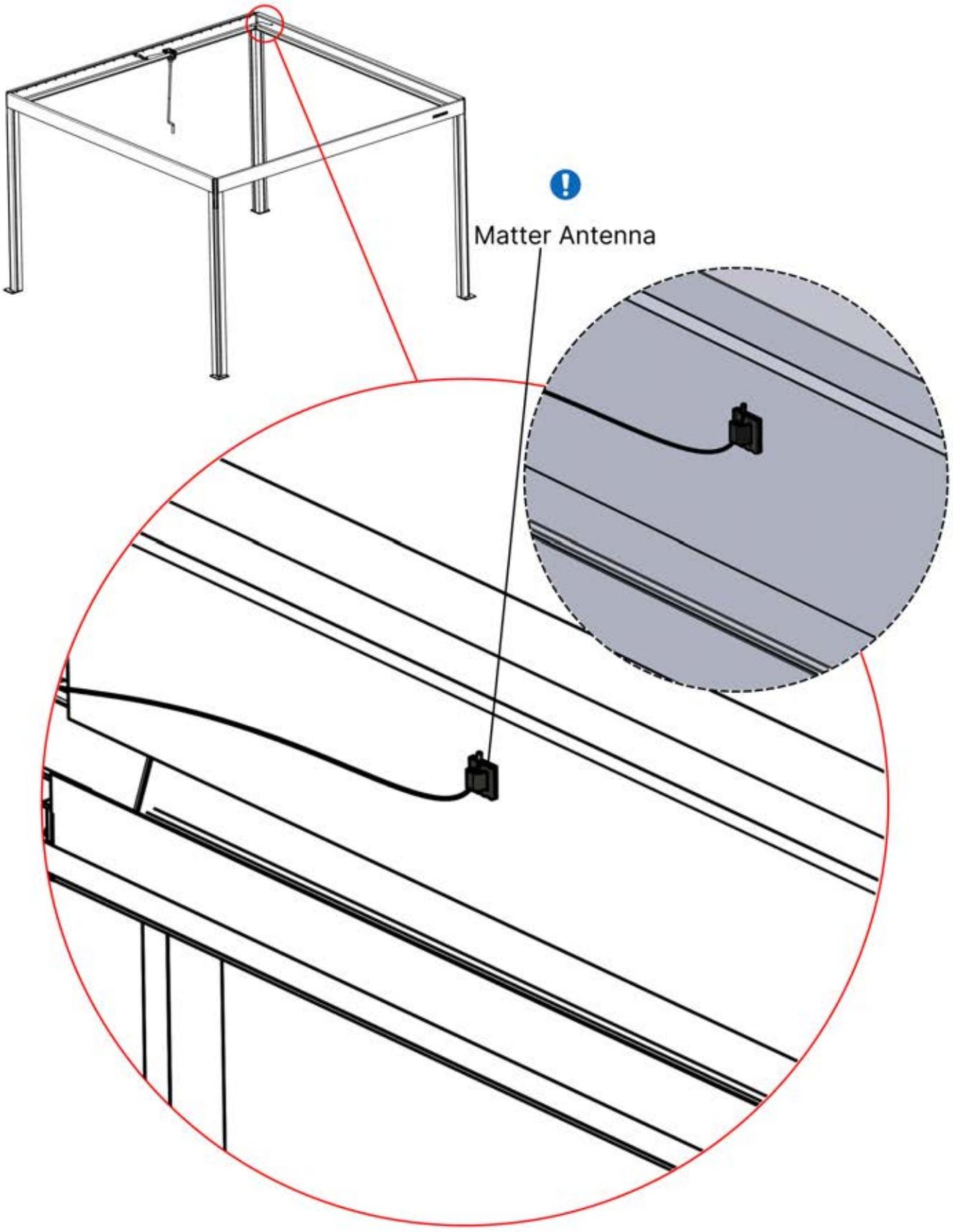

34

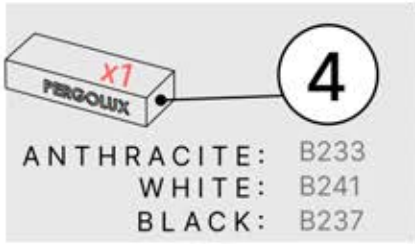

ANTHRACITE: B233
WHITE: B241
BLACK: B237

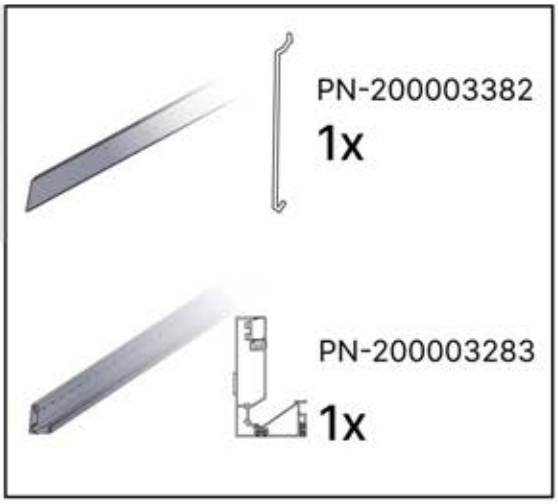

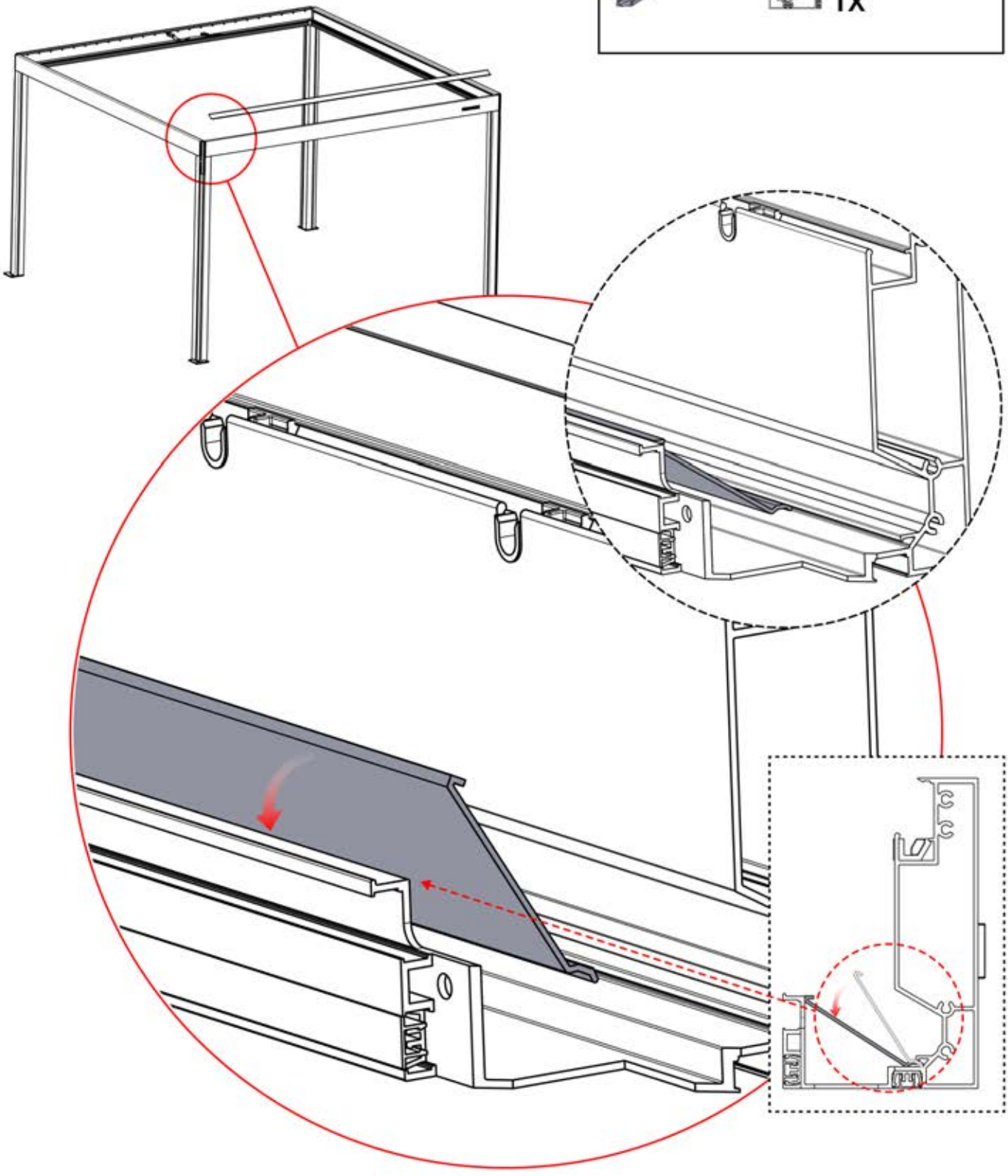

35

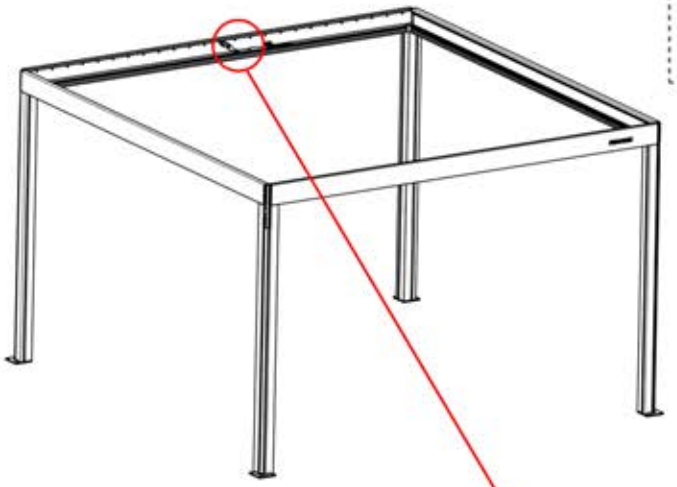



Remote
Controller

Adjust motor to
prepare for
assembly on step 36

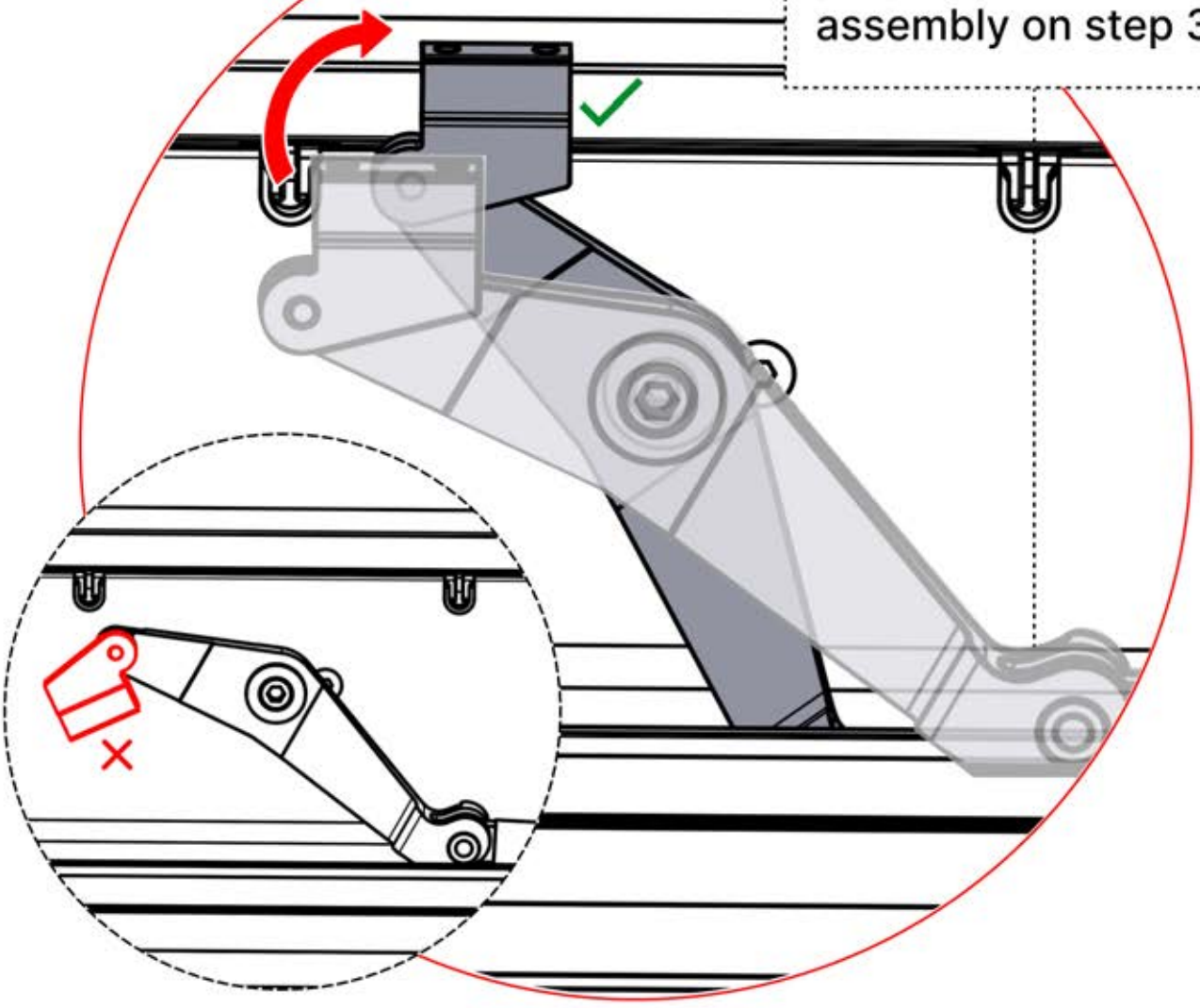

36

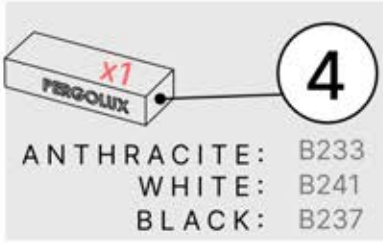

ANTHRACITE: B233
WHITE: B241
BLACK: B237



PN-200002613
1x



PN-200000826
2x

PN-20000
3320
Zip Bag

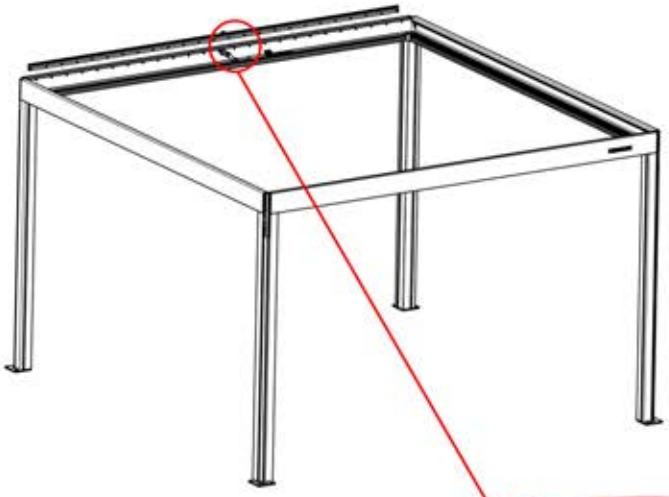

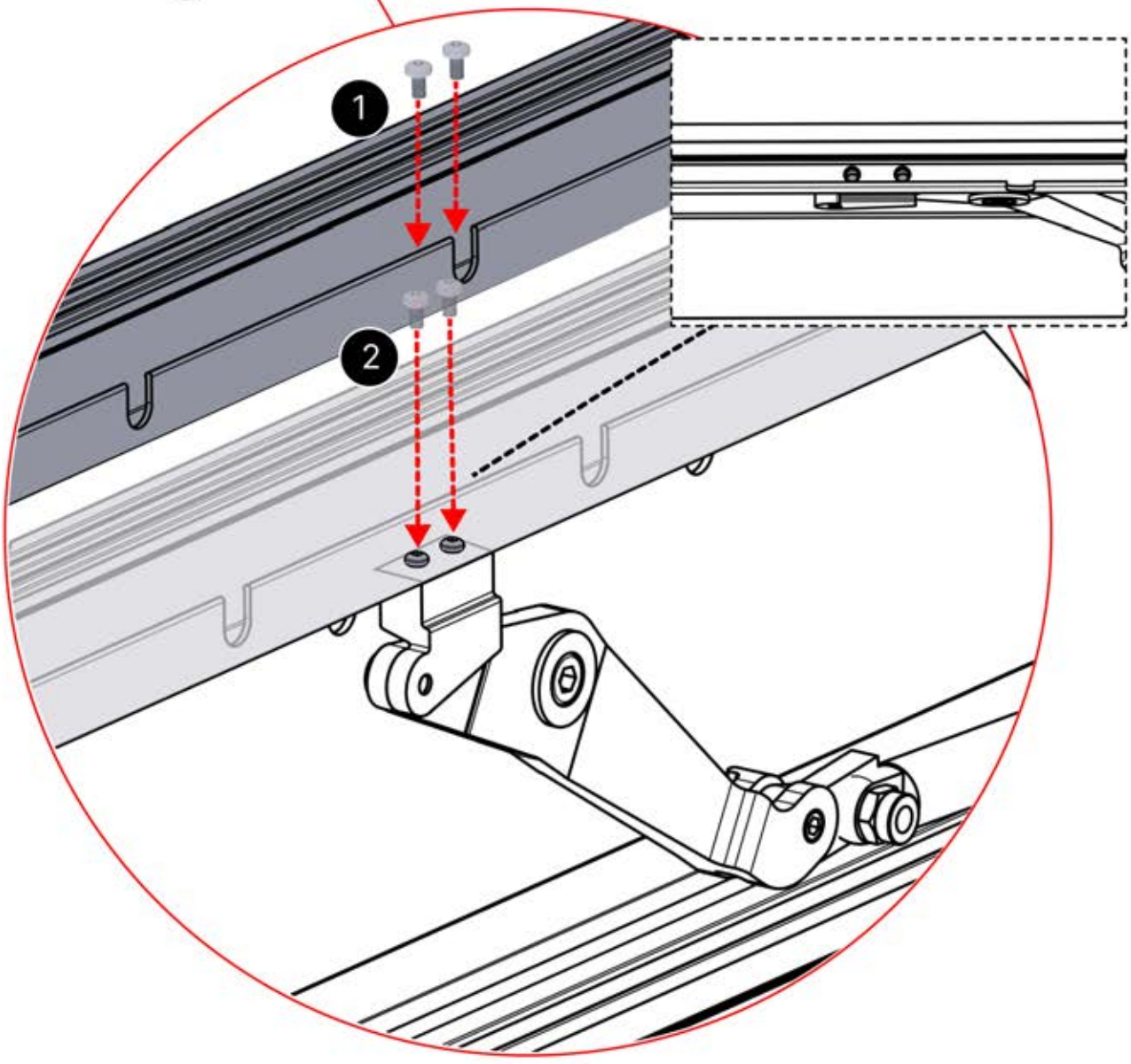

ITEMS IN BOX

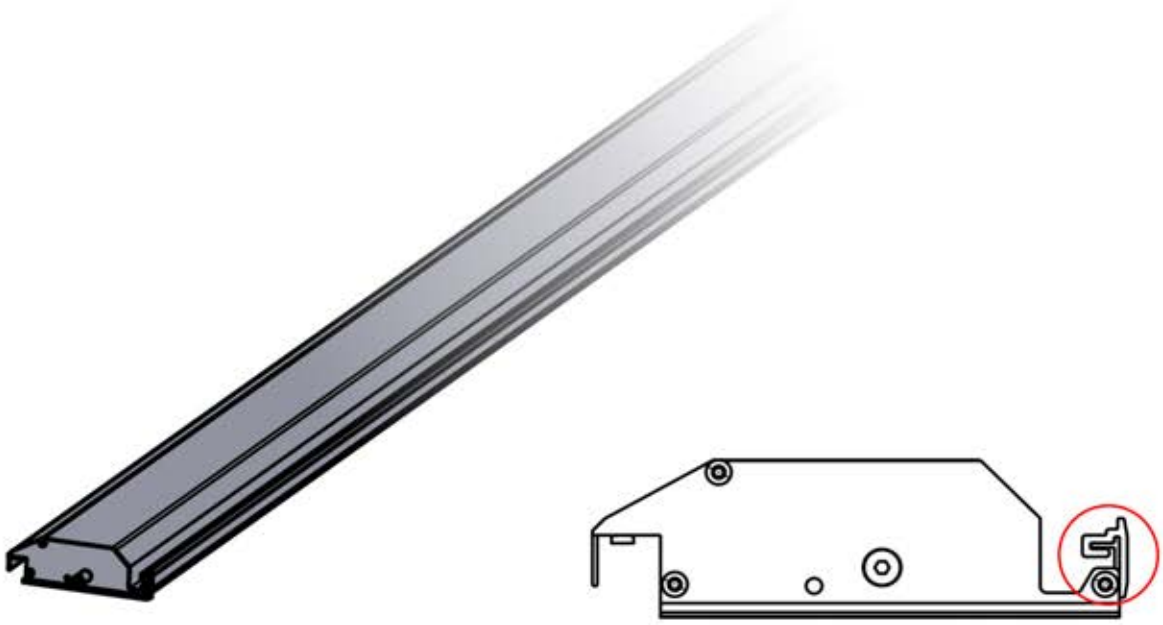

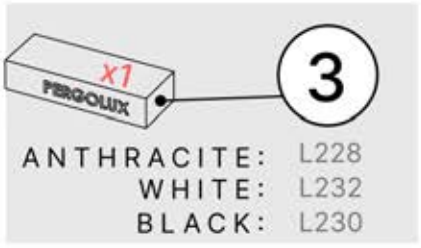

PLR 150 G2 PRO LOUVER END FS 4M PACKAGE

PN-200002985

1x

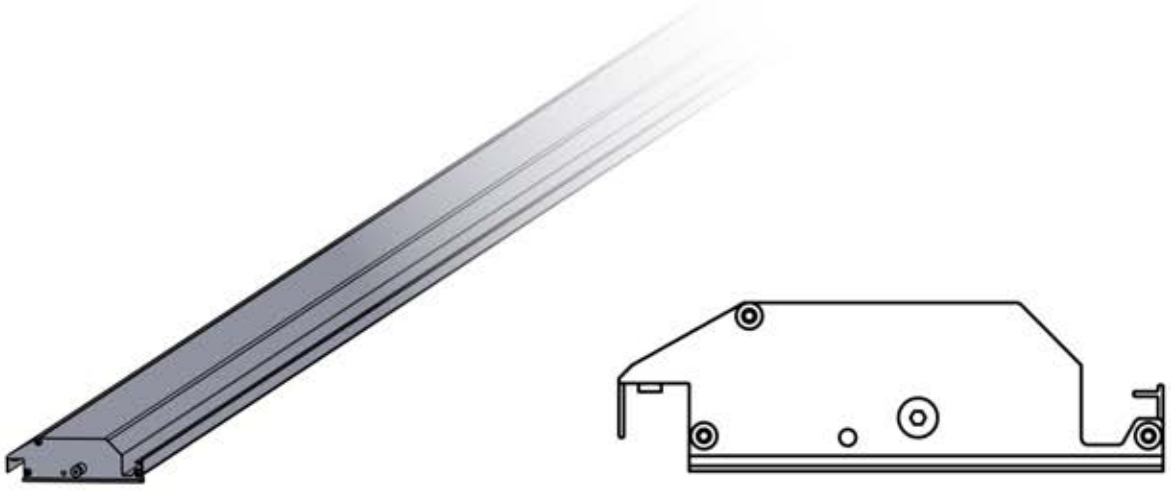

Standard



PLR 150 G2 PRO LOUVER STD FS 4M PACKAGE

PN-200002980

Variable

37



2

ANTHRACITE: L216
WHITE: L220
BLACK: L218

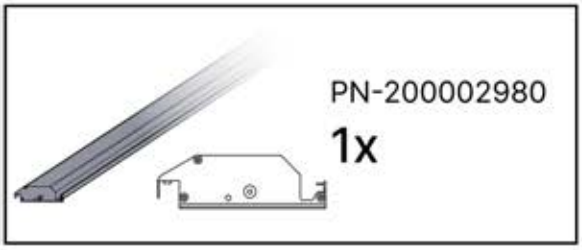

PN-200002980

1x

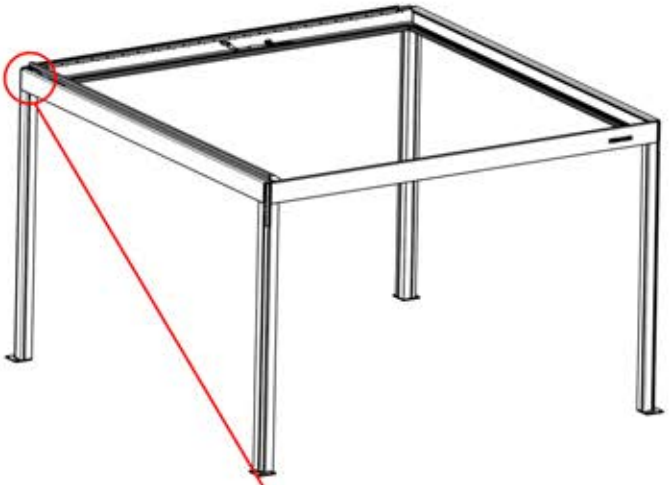

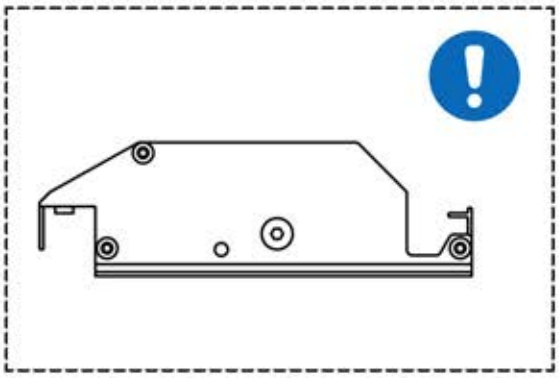

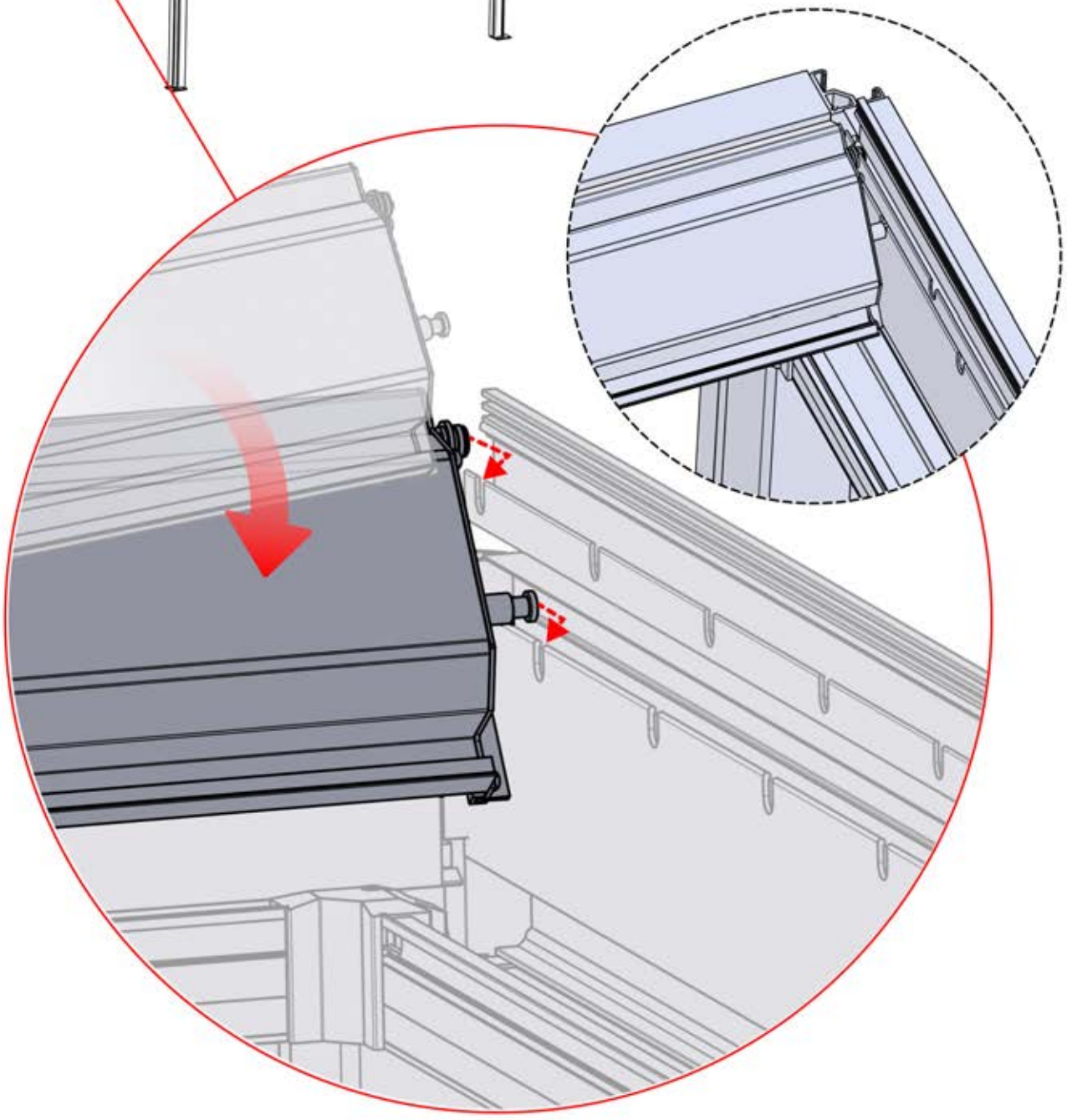

38



2

ANTHRACITE: L216
WHITE: L220
BLACK: L218



PN-200002980

1x

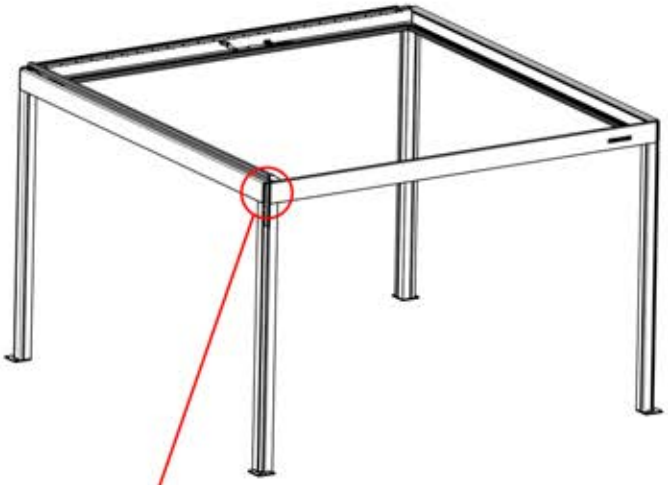

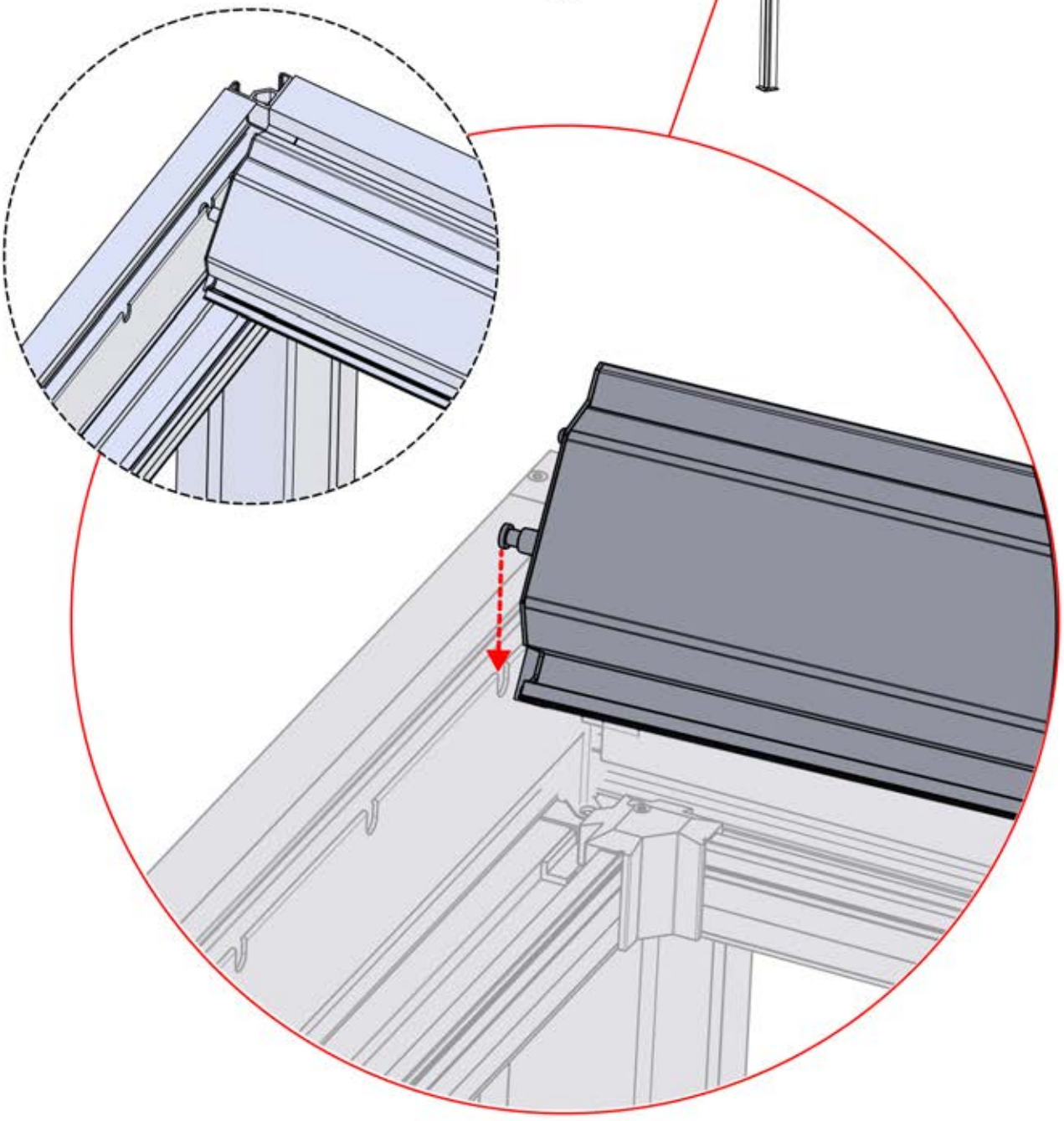

39

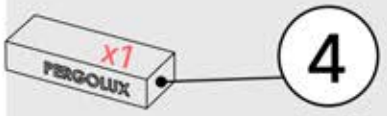

4

ANTHRACITE: B233
WHITE: B241
BLACK: B237



PN-200003033
1X

PN-20000
3278
Zip Bag

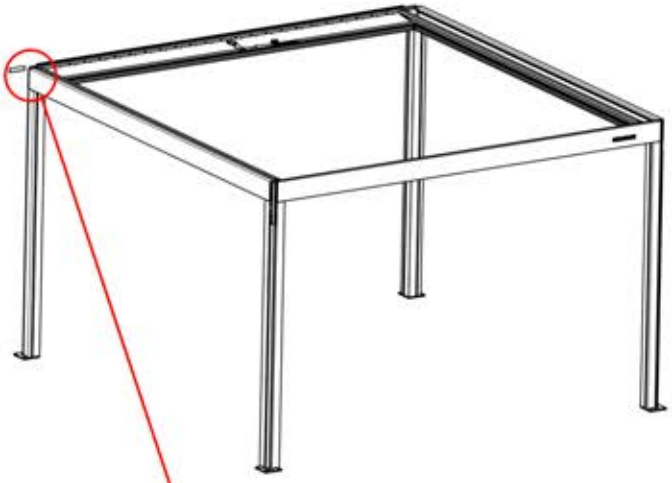

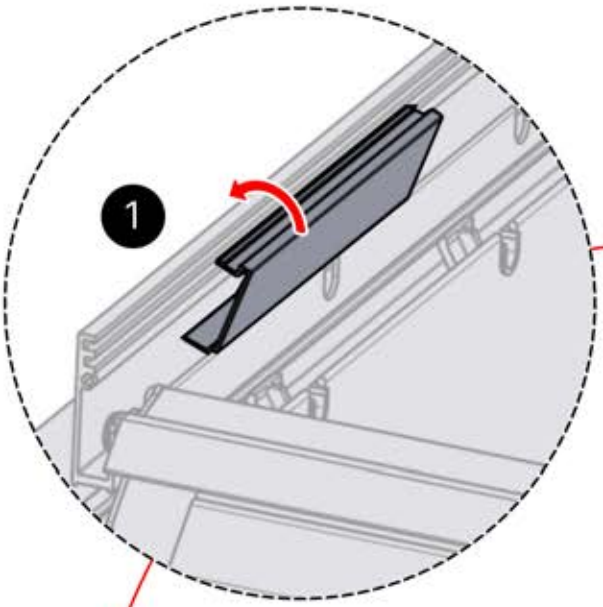

40

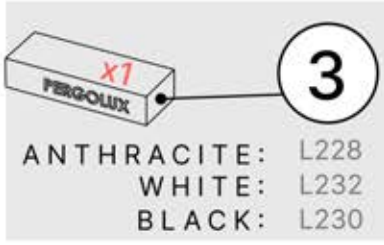
x1
PERGOLUX
3
ANTHRACITE: L228
WHITE: L232
BLACK: L230

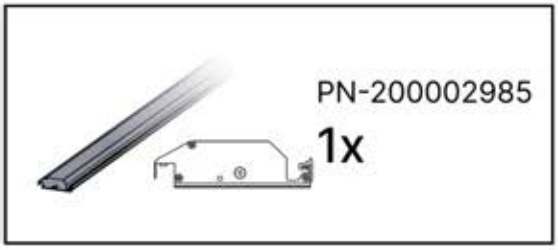
PN-200002985
1x

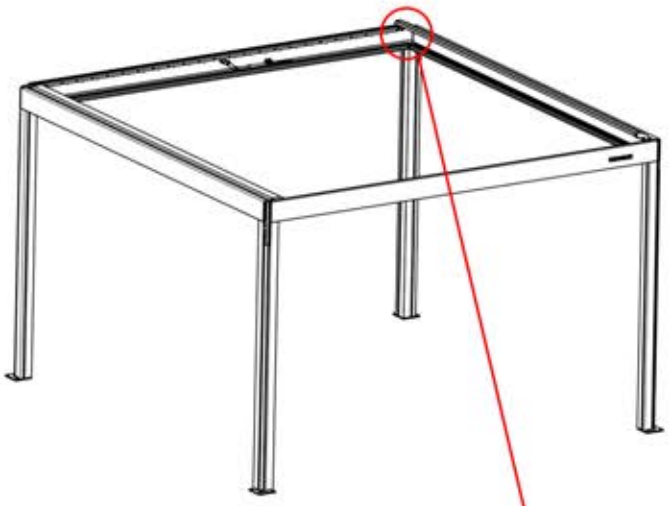

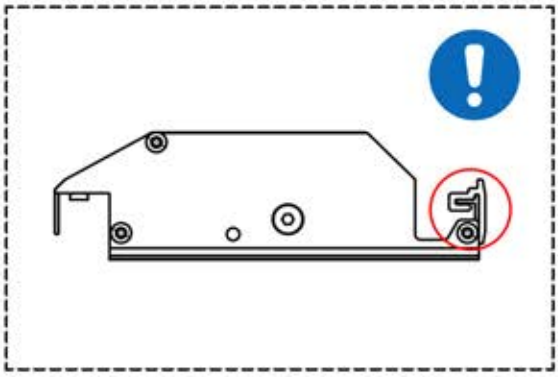

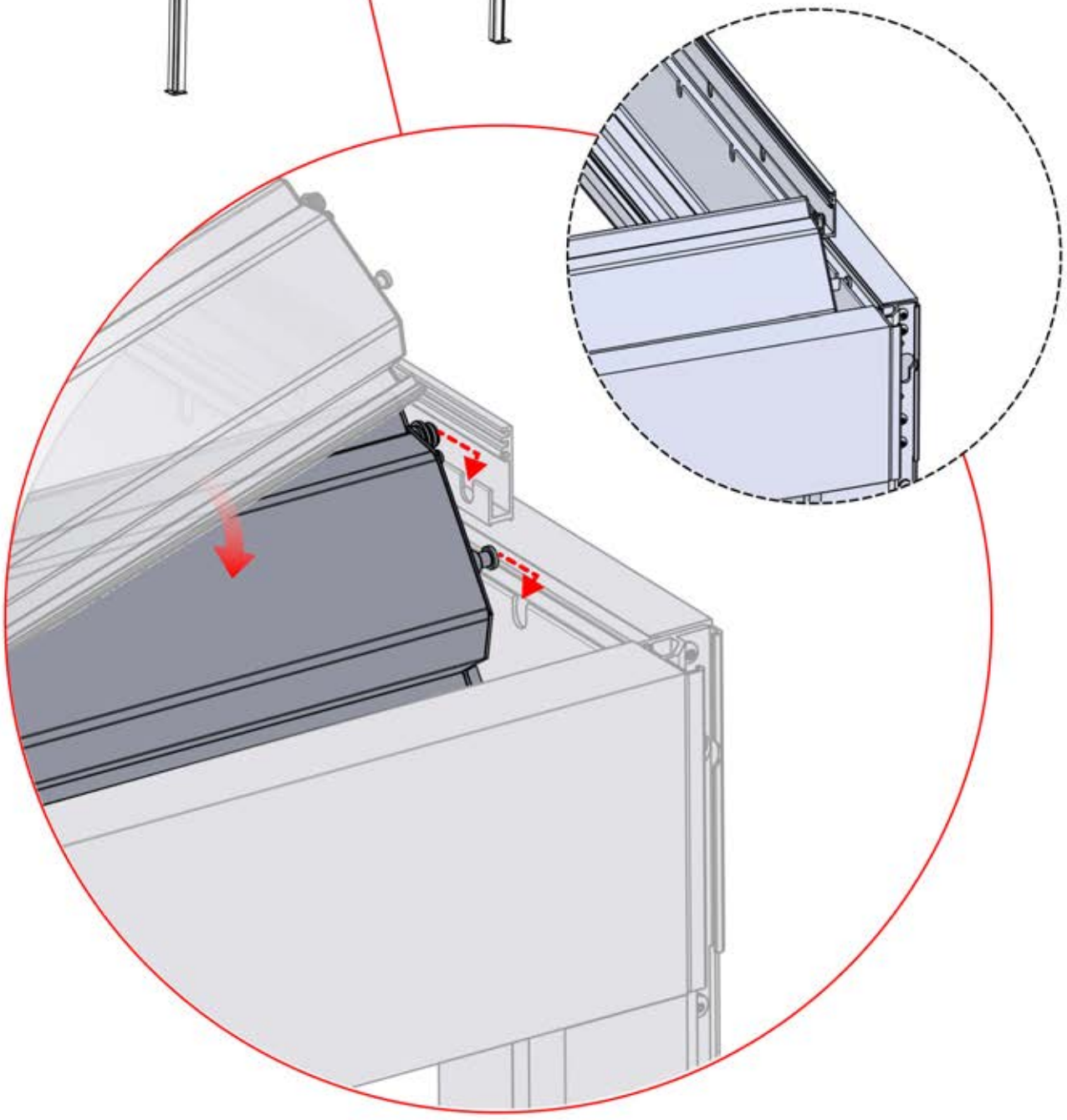

41

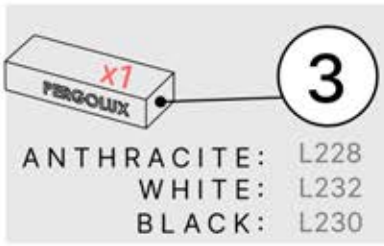

ANTHRACITE: L228
WHITE: L232
BLACK: L230

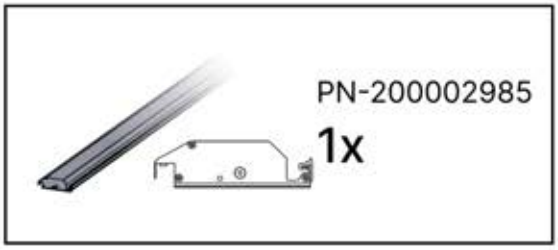

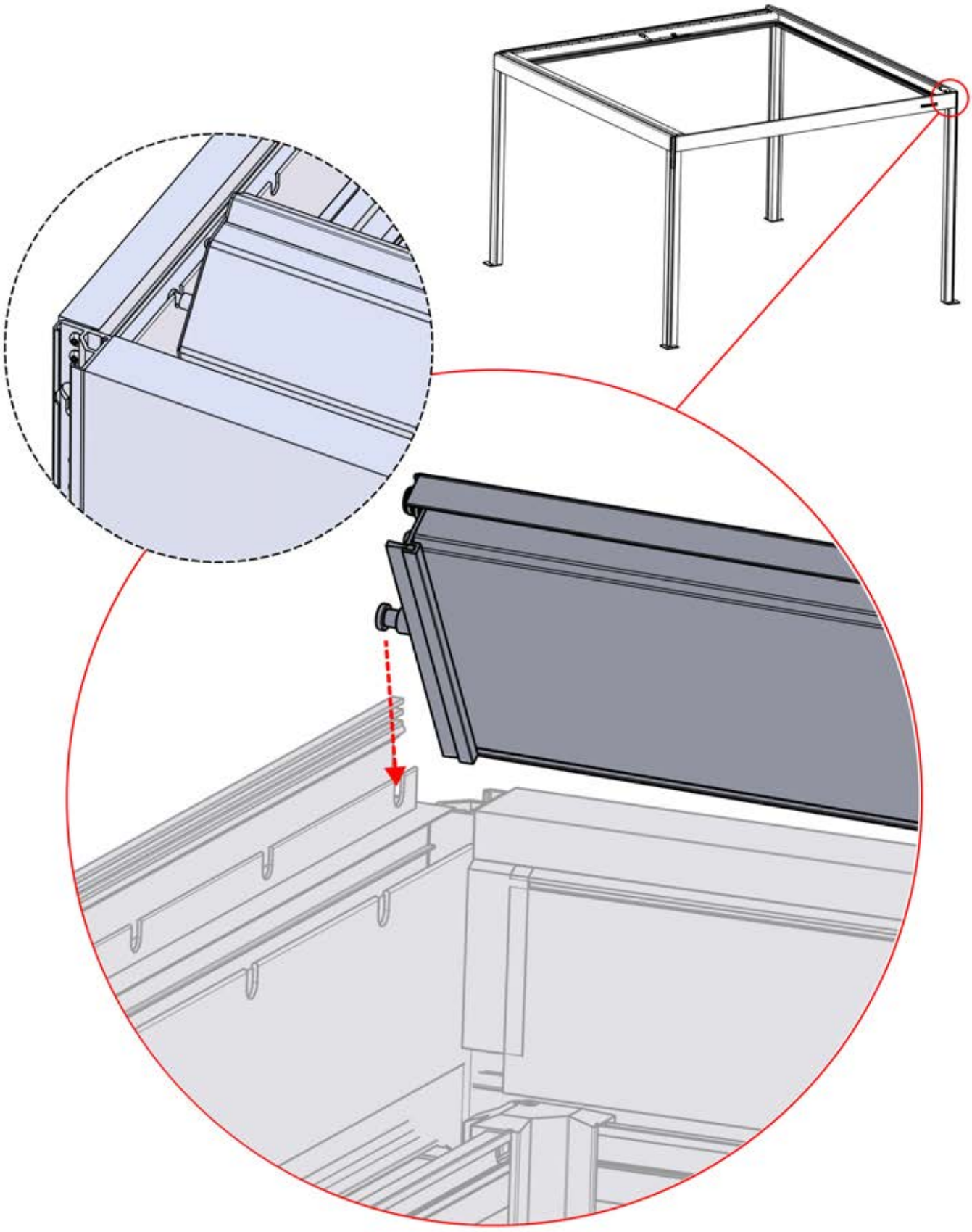

42

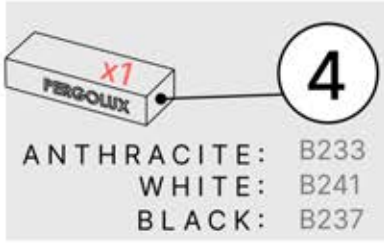

ANTHRACITE: B233
WHITE: B241
BLACK: B237



PN-200003033
1X

PN-20000
3278
Zip Bag

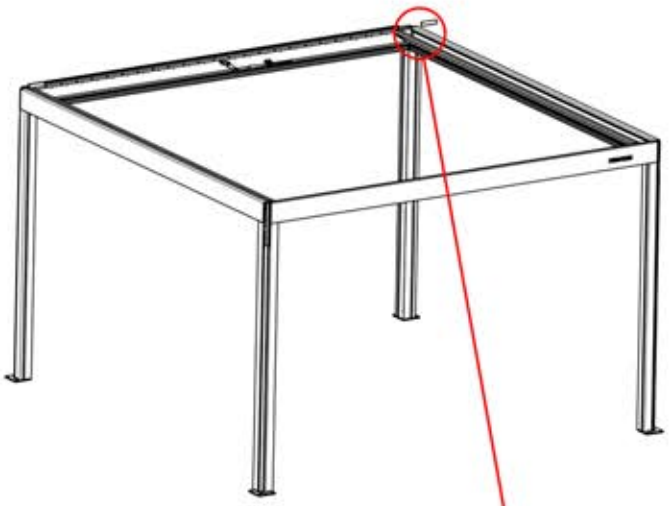

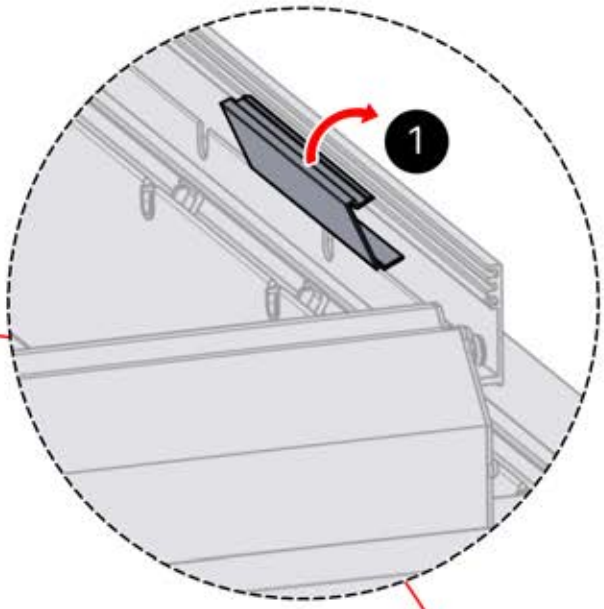

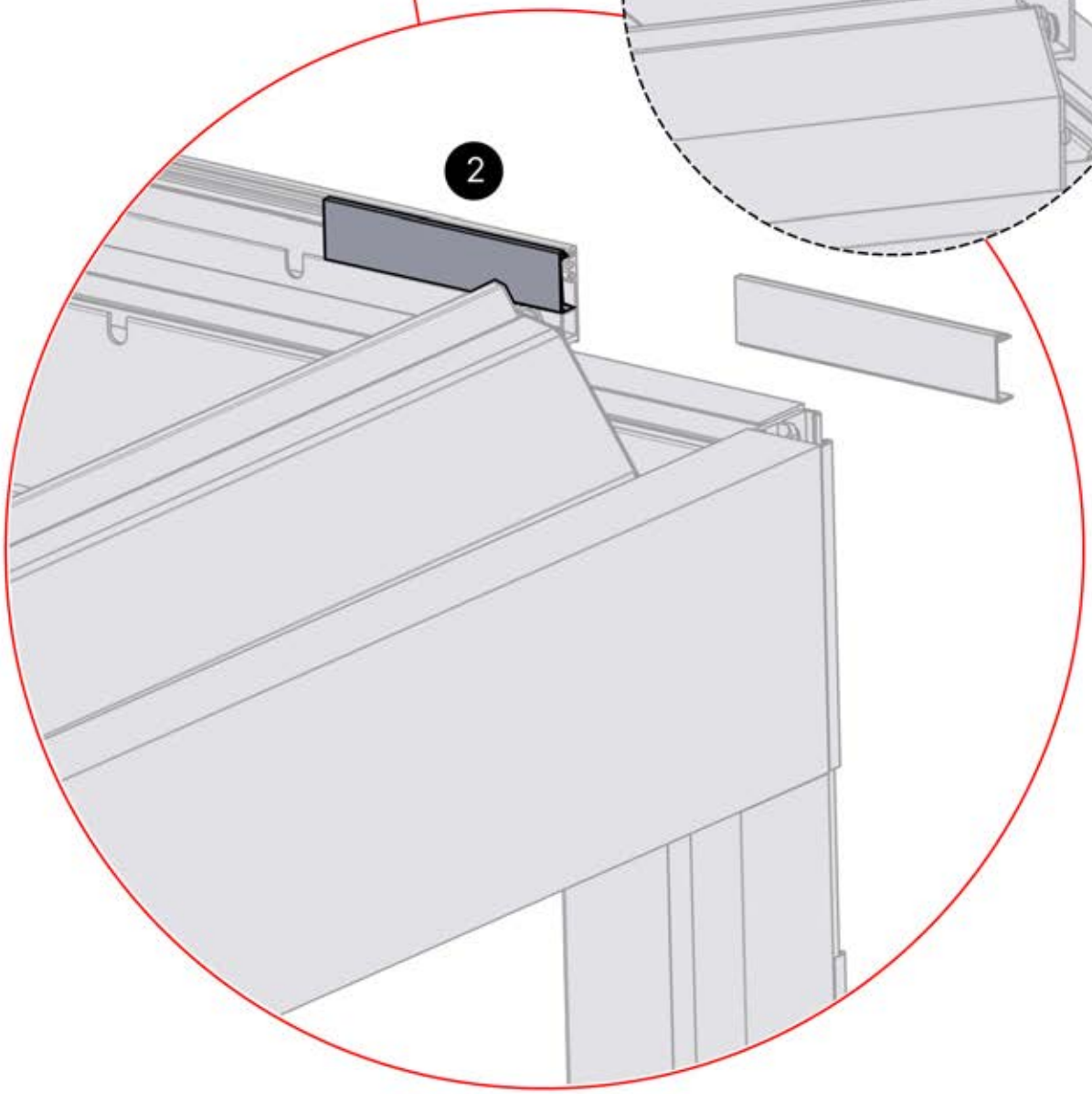

43

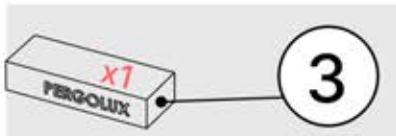

3

ANTHRACITE: L228
WHITE: L232
BLACK: L230



2

ANTHRACITE: L216
WHITE: L220
BLACK: L218



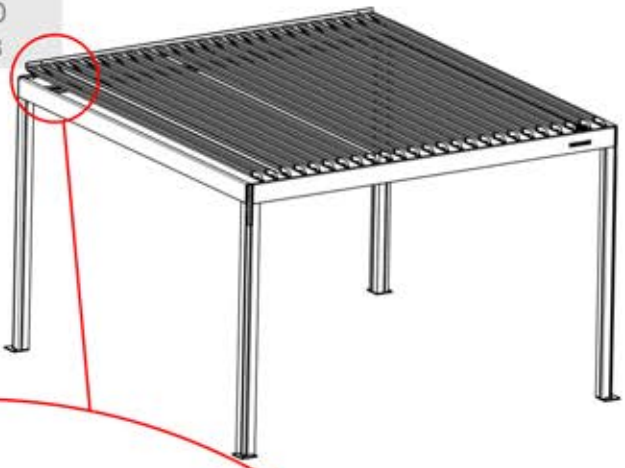

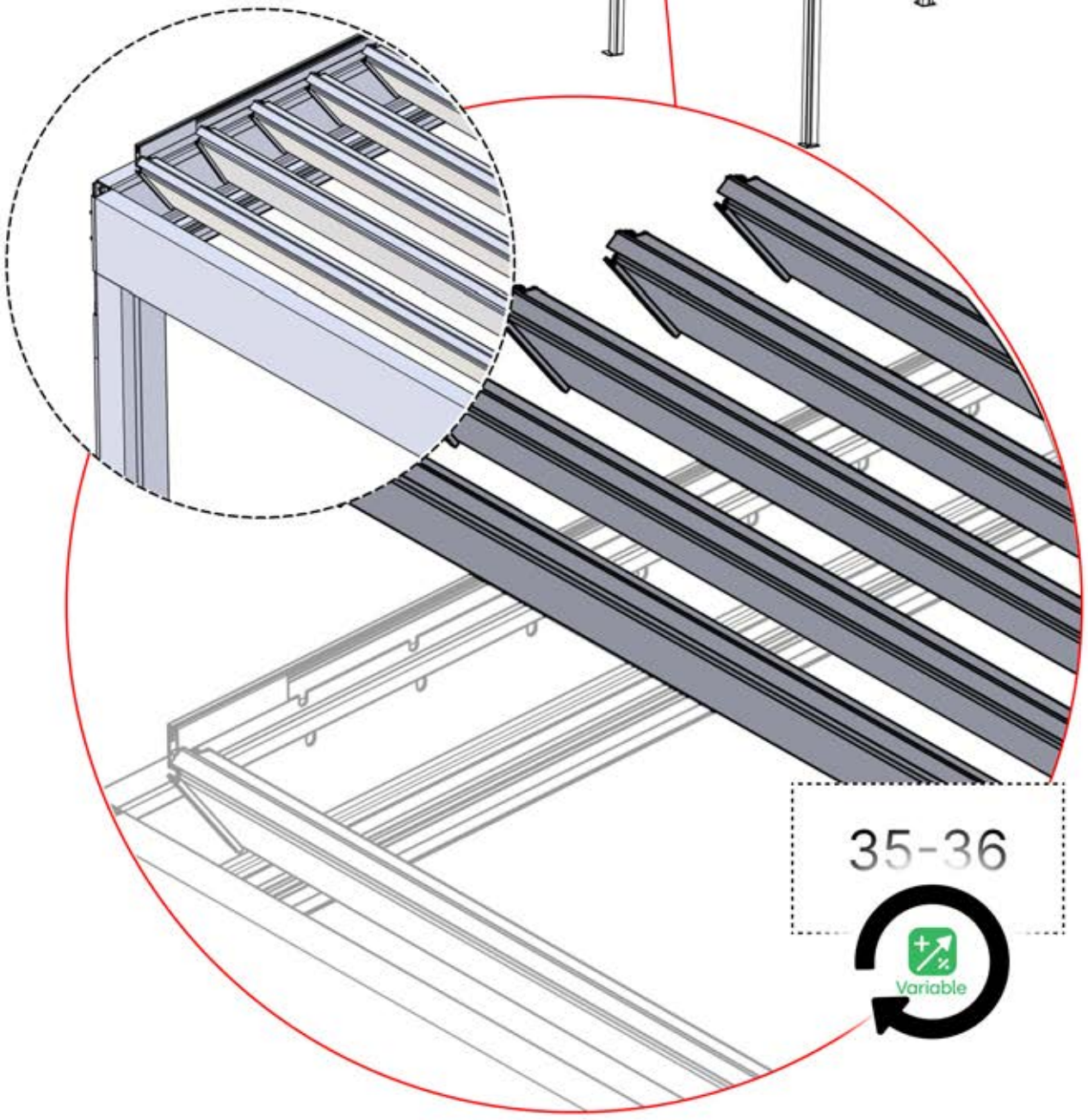

35-36

44

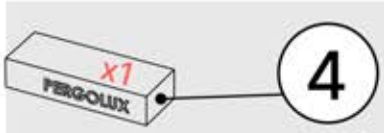

ANTHRACITE: B233
WHITE: B241
BLACK: B237



PN-200003382
1x

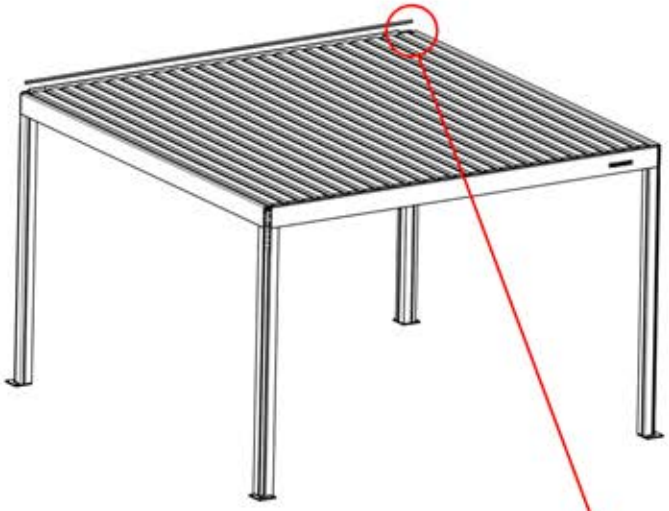

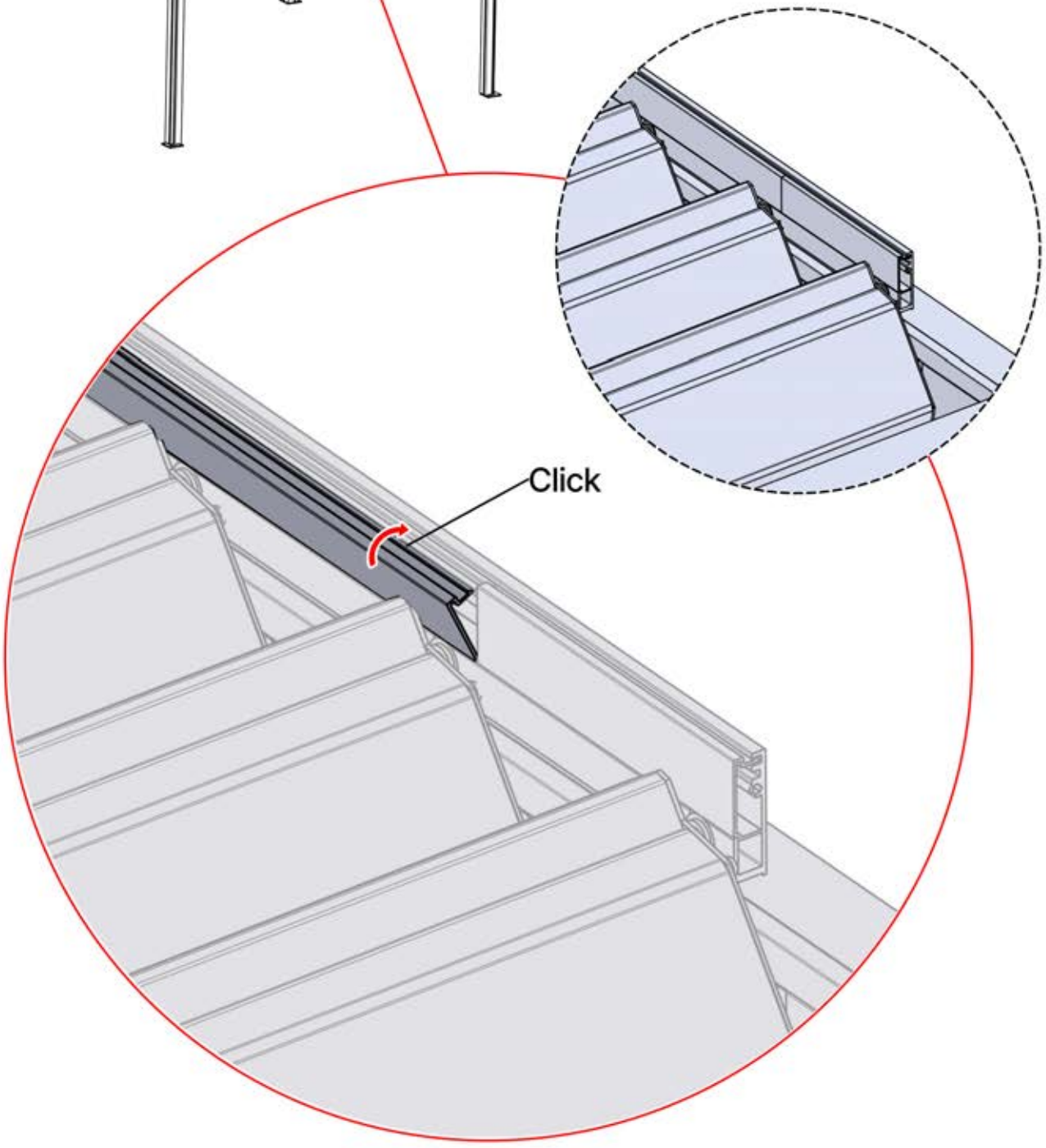

45

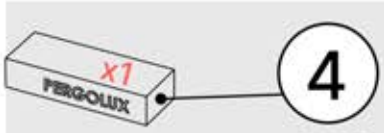

ANTHRACITE: B233
WHITE: B241
BLACK: B237



PN-200003030
1x



PN-200003031
1x



PN-200001207
2x

PN-20000
3278
Zip Bag

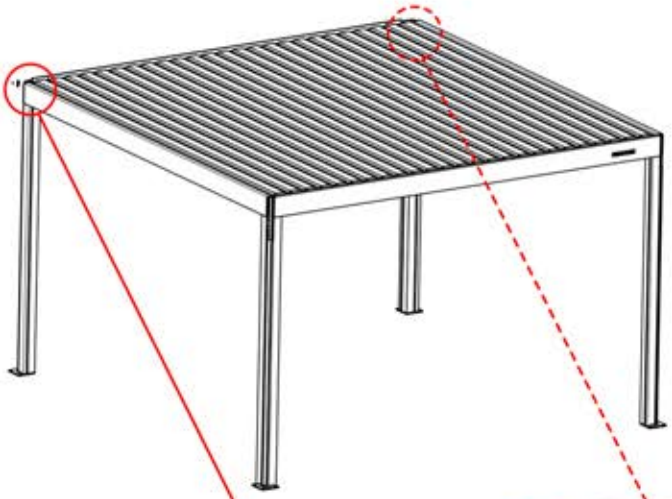

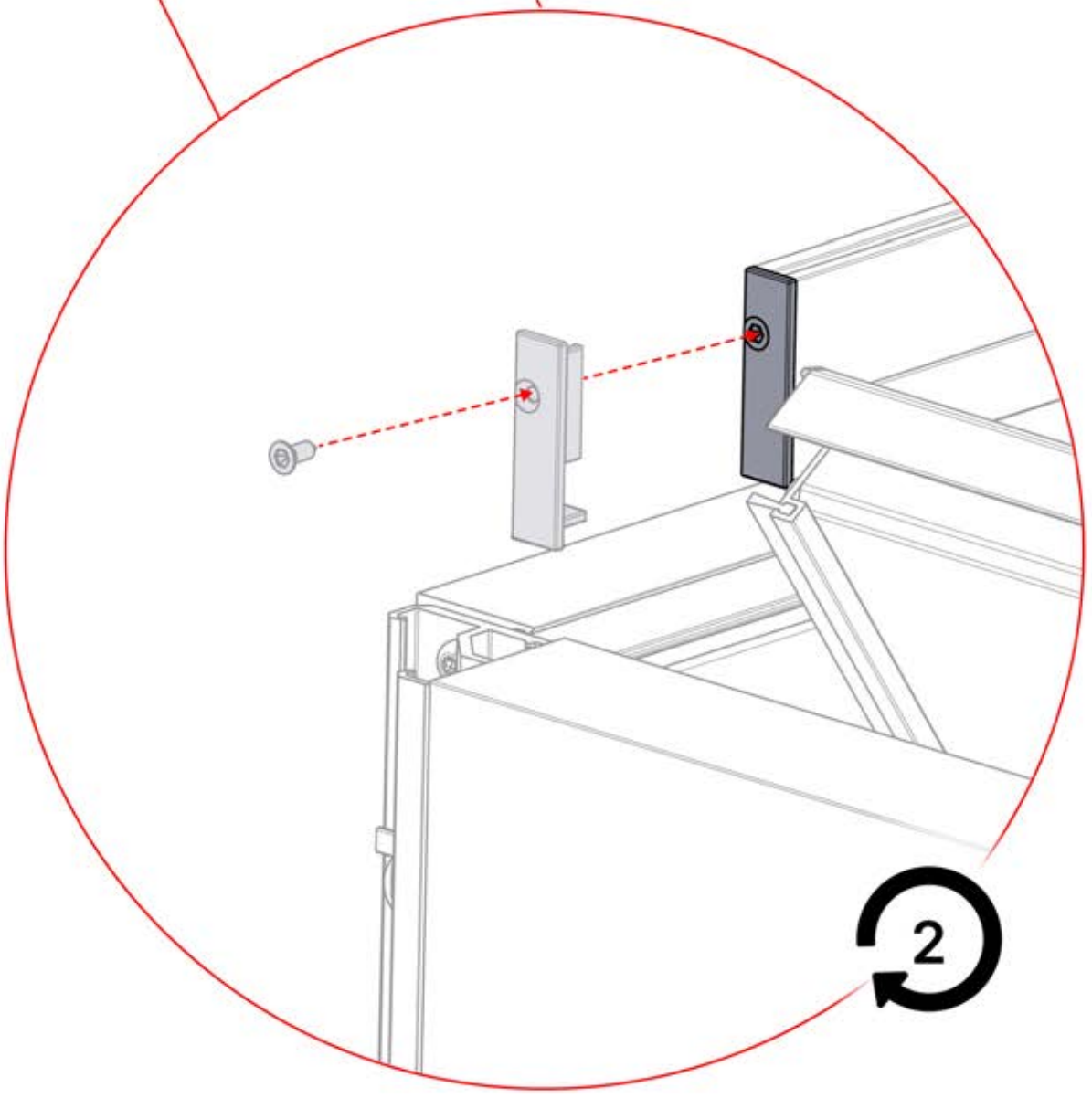

46

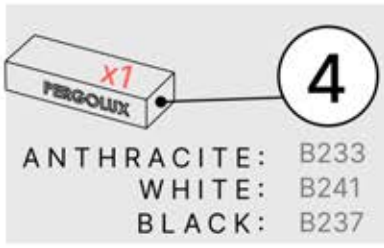

ANTHRACITE: B233
WHITE: B241
BLACK: B237

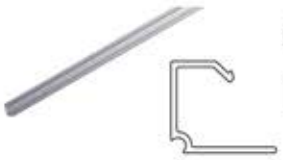

PN-200002623
1x

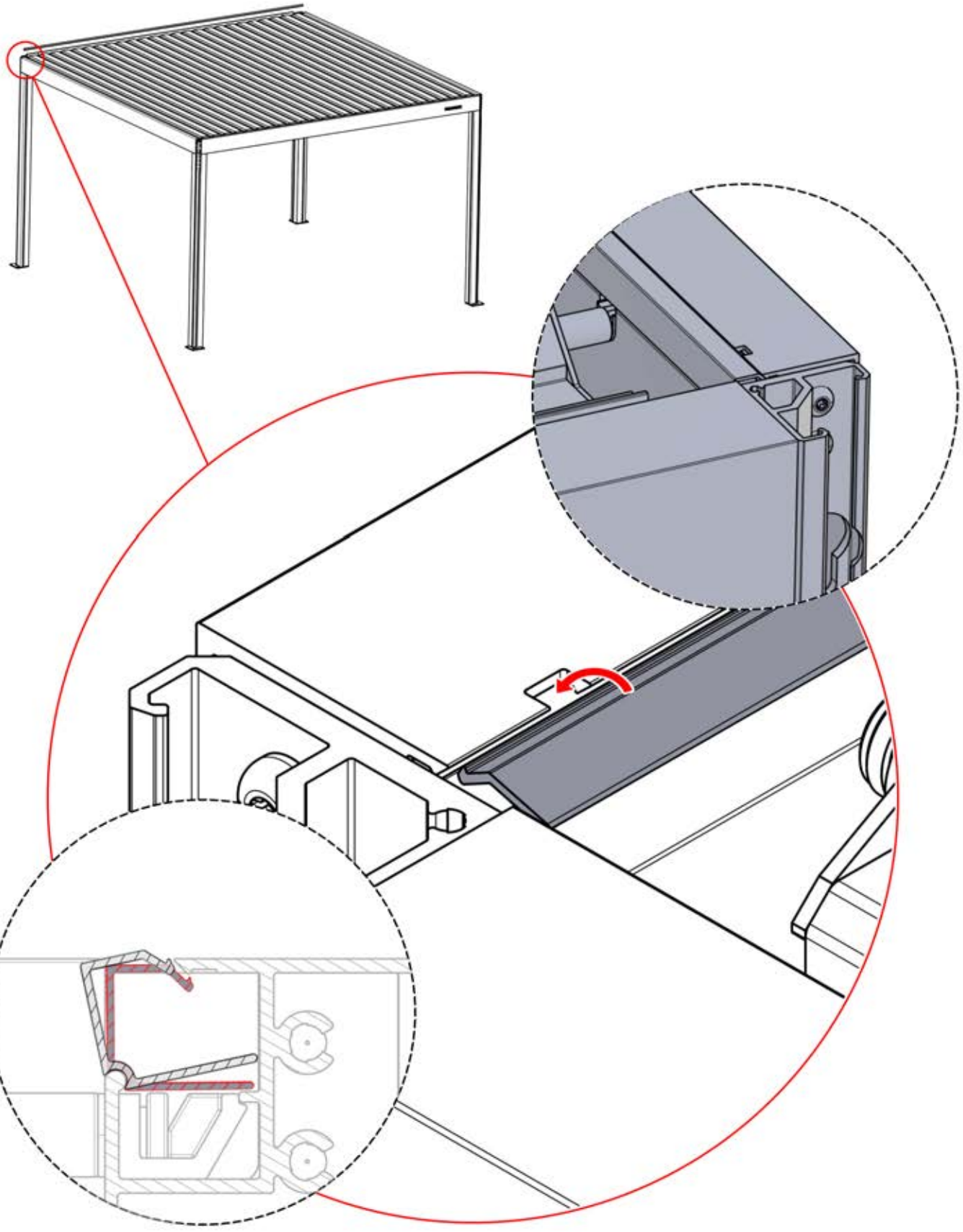

47

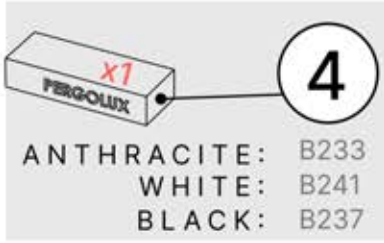

ANTHRACITE: B233
WHITE: B241
BLACK: B237

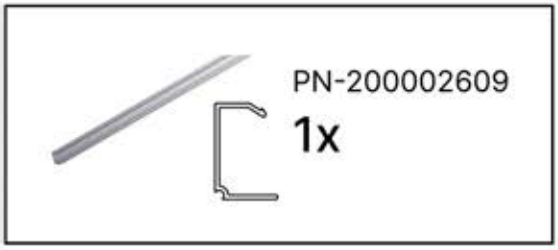

PN-200002609
1x

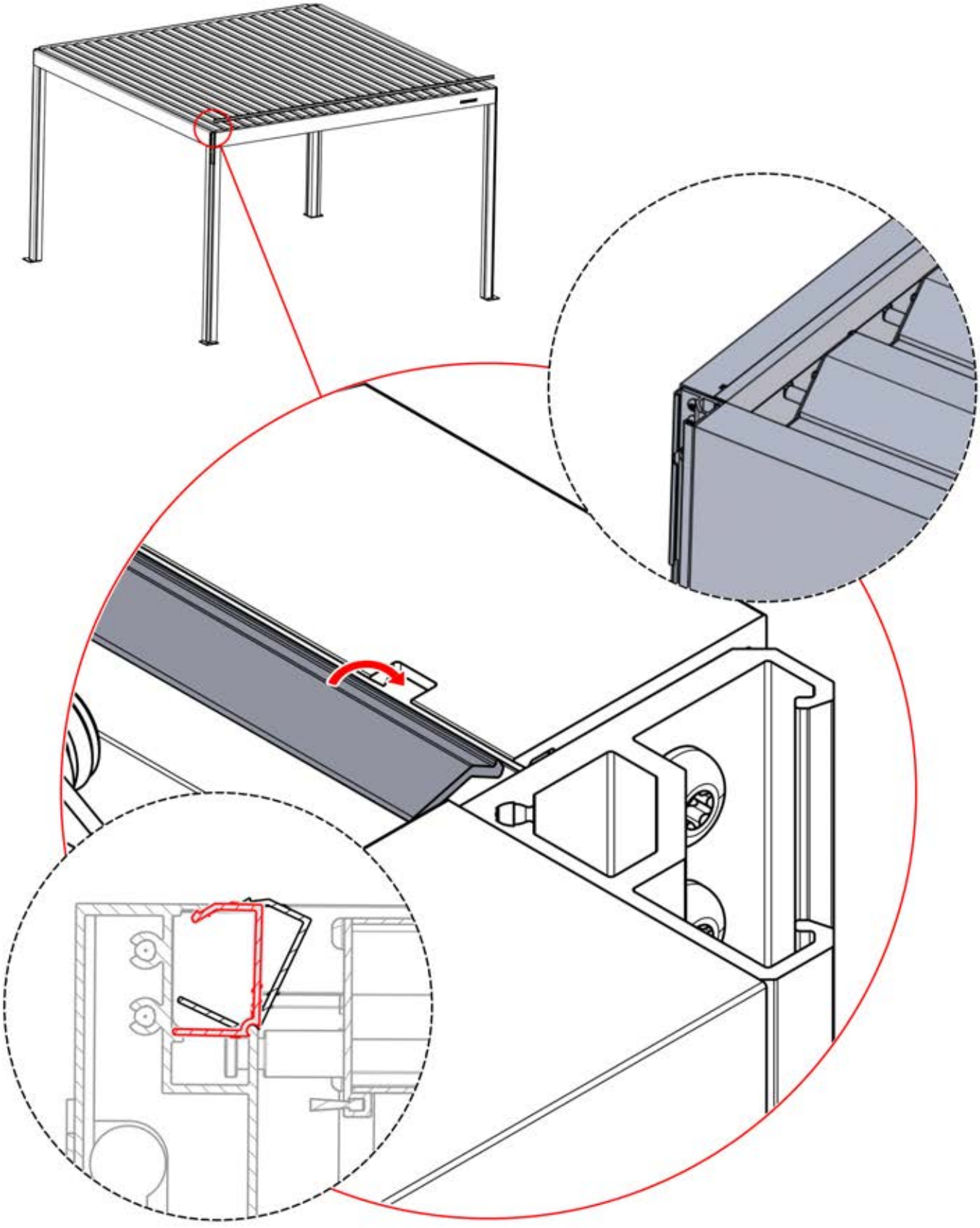

48

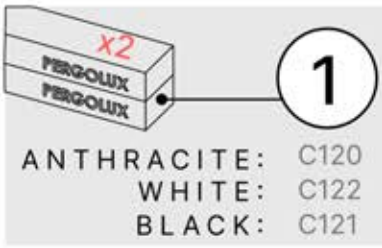
x2
PERGOLUX
PERGOLUX
1
ANTHRACITE: C120
WHITE: C122
BLACK: C121

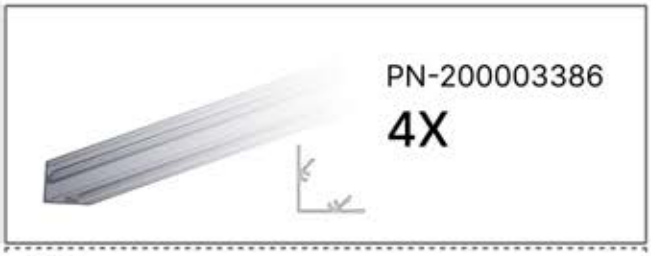
PN-200003386
4X

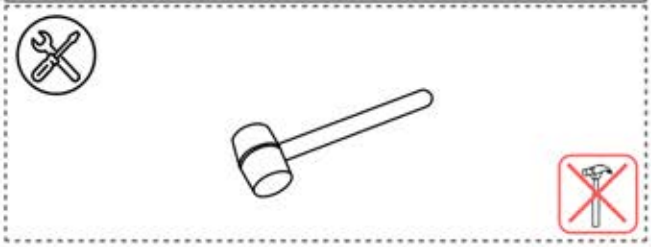

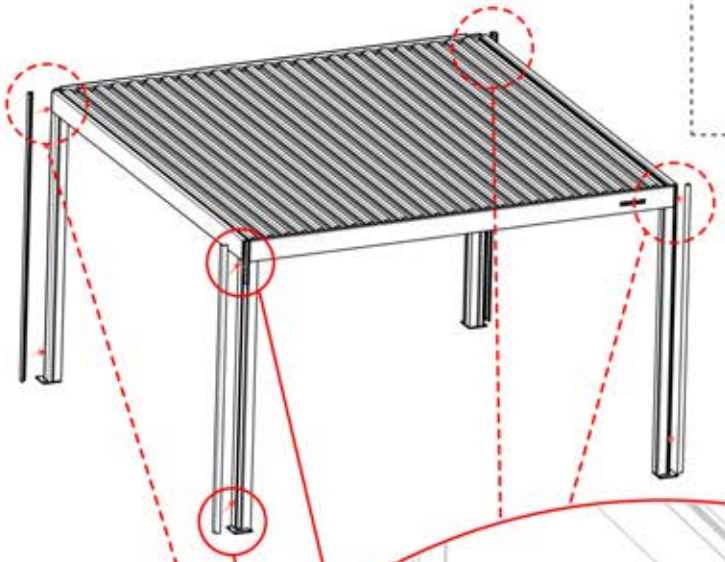

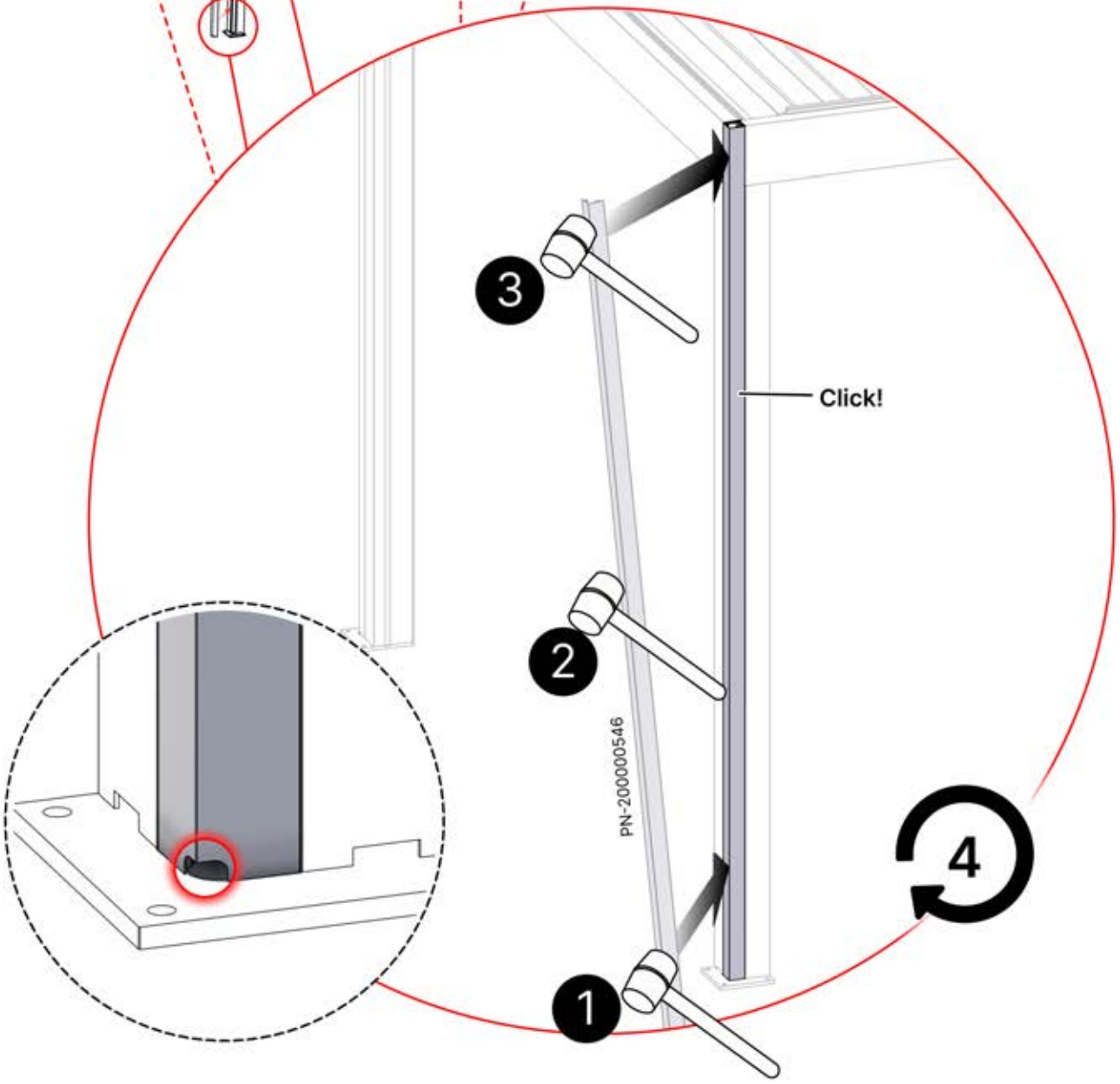
3
Click!
2
PN-200000546
4
1

49

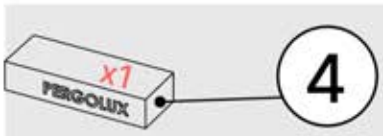

ANTHRACITE: B233
WHITE: B241
BLACK: B237



PN-200001514
4x



PN-200000840
12x

PN-20000
3282
Zip Bag

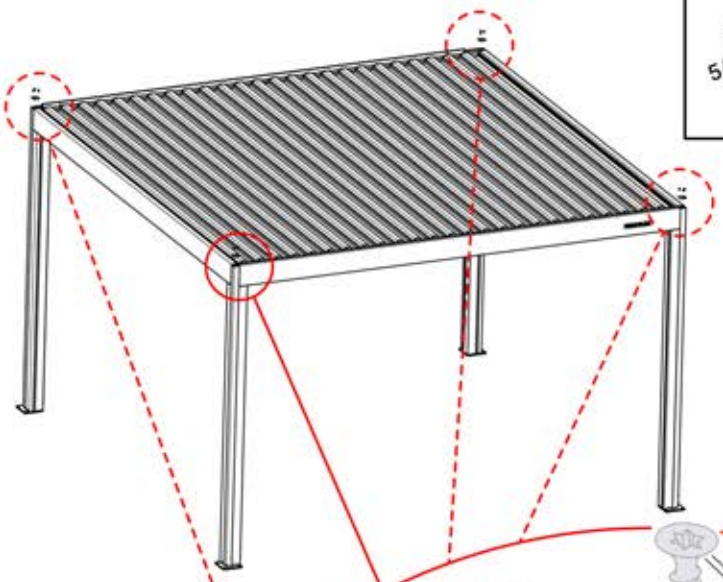

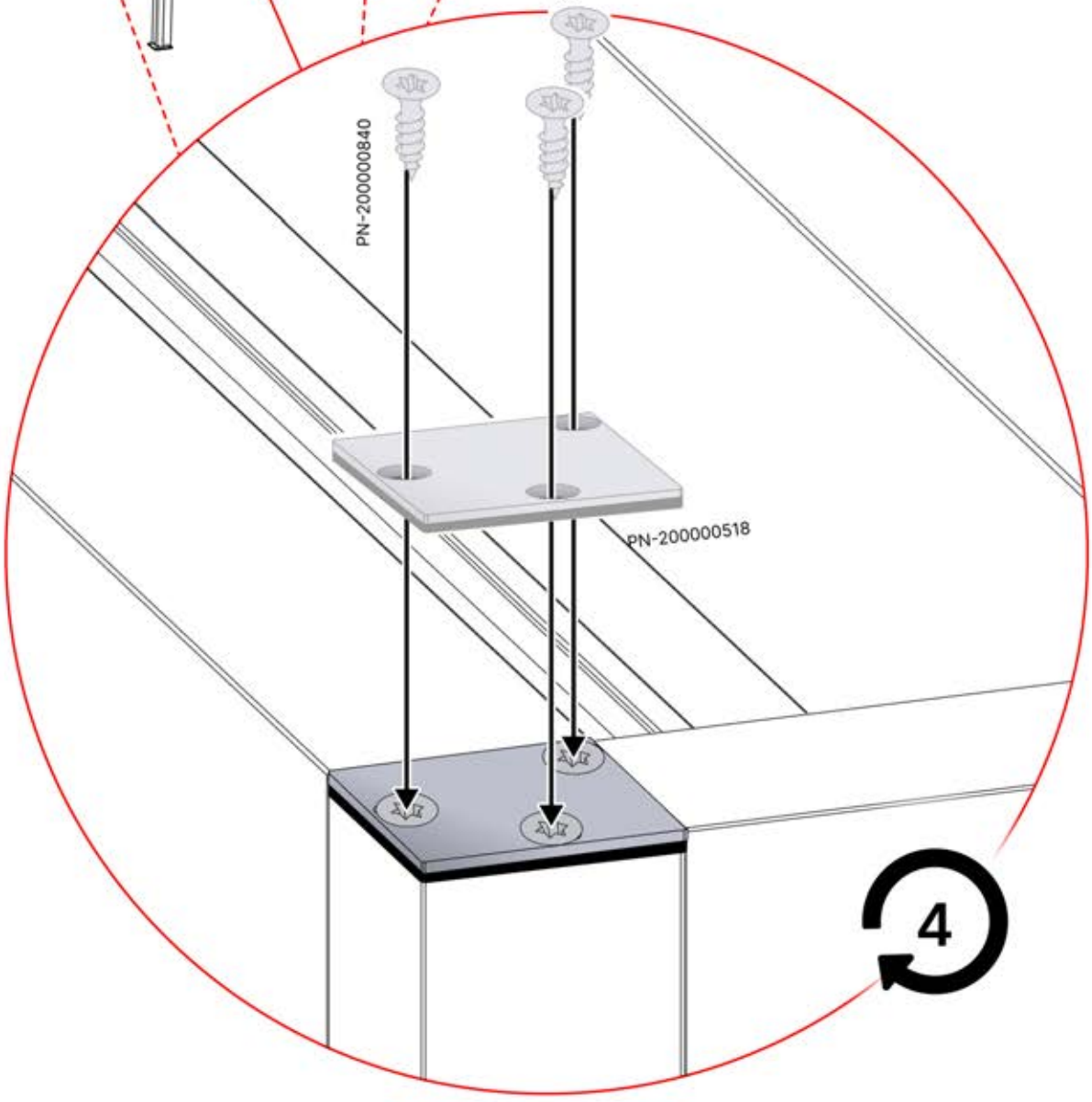

50

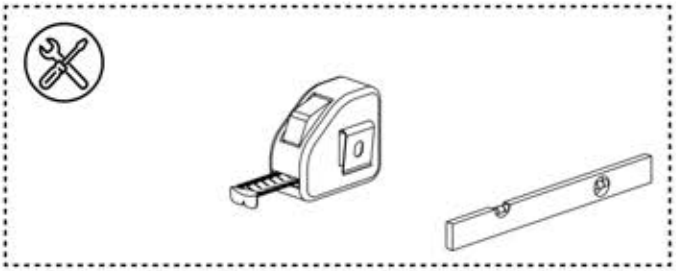

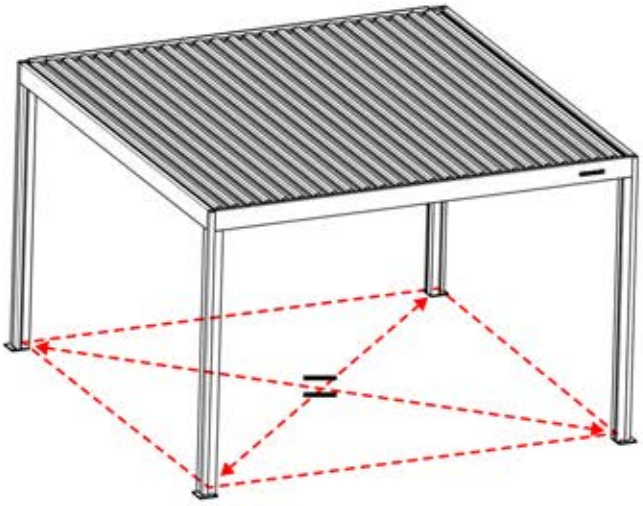

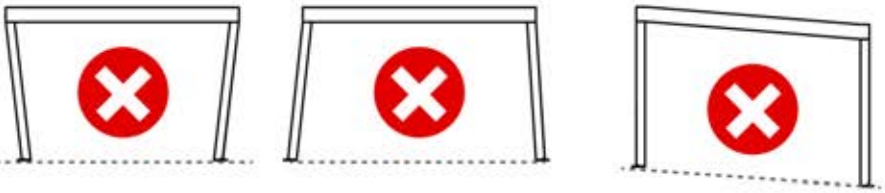

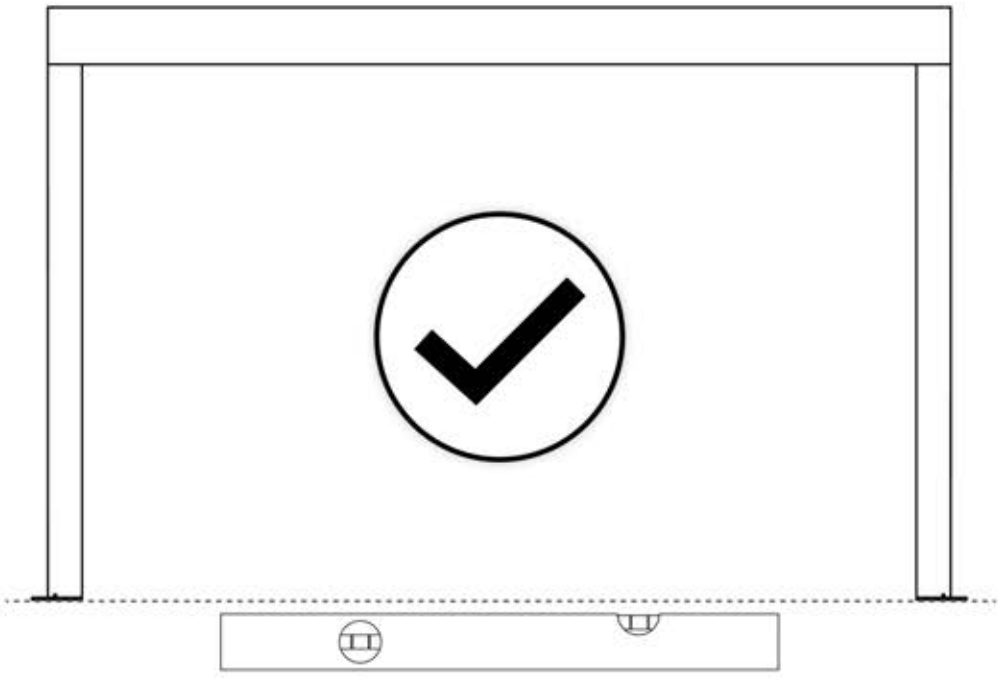

51

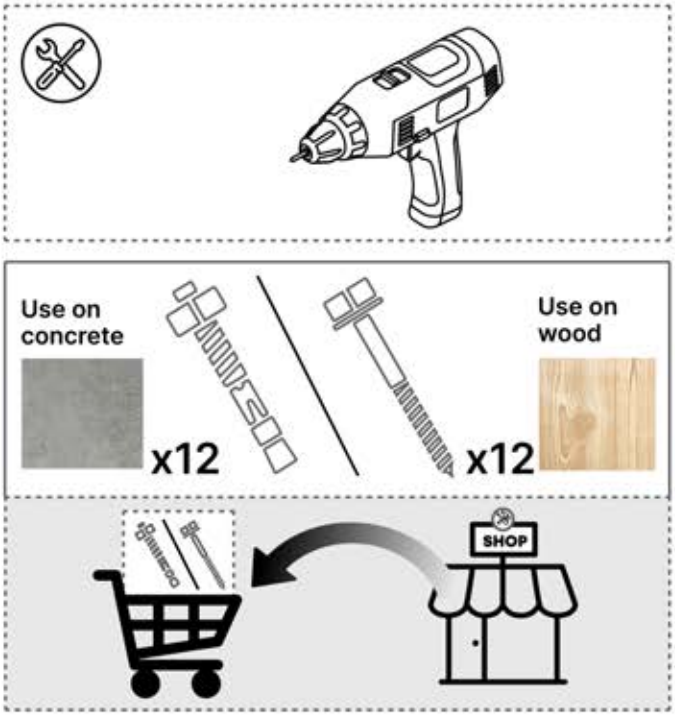

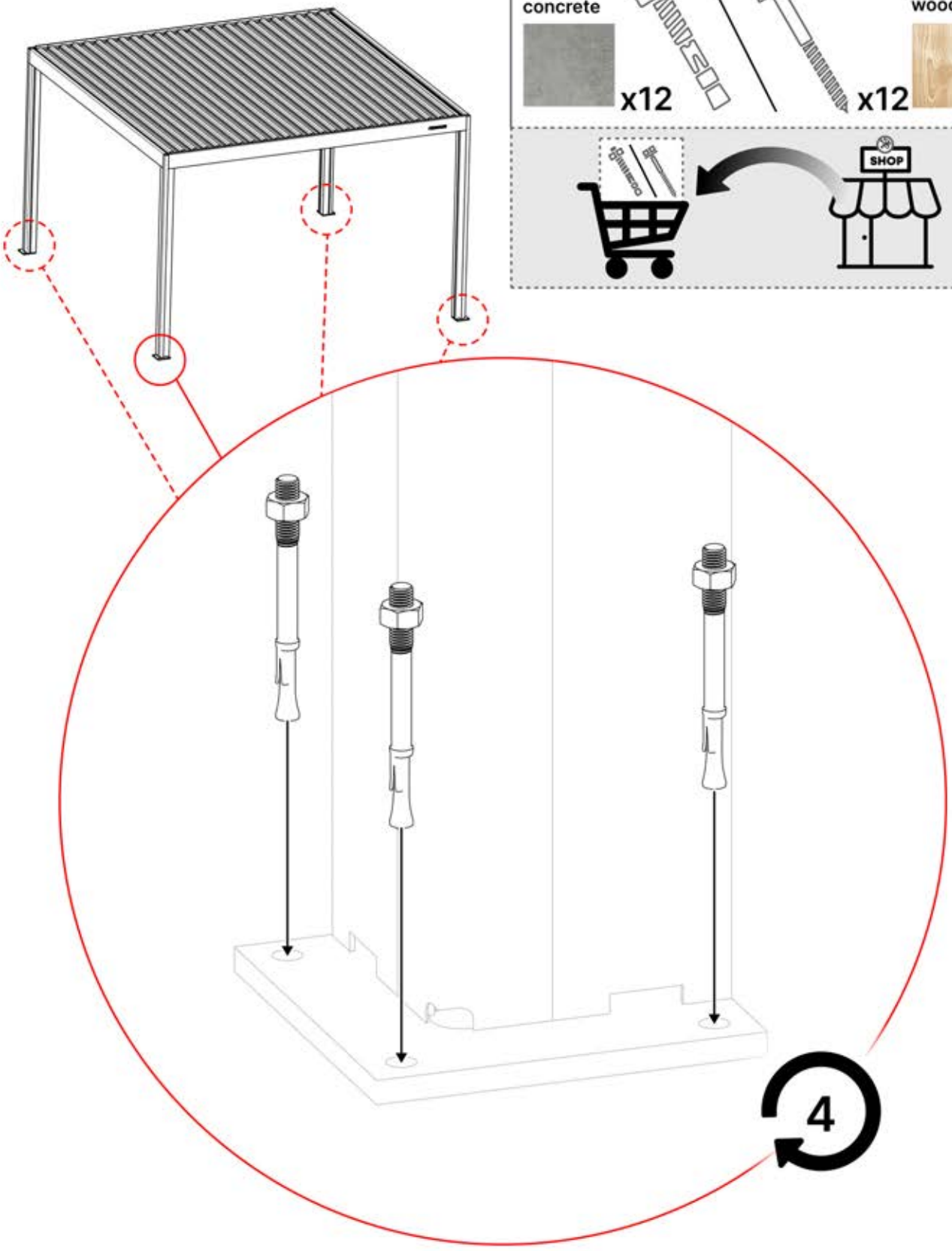

PERGOLUX | CUSTOM DESIGN S4

FREESTANDING



Designed and developed by PERGOLUX

10 Year GUARANTEE

reddot winner 2024

TÜVRheinland CERTIFIED

Type Approved
Regular
Production
Surveillance

www.tuv.com
ID 1111317678