S4

CUSTOM DESIGN

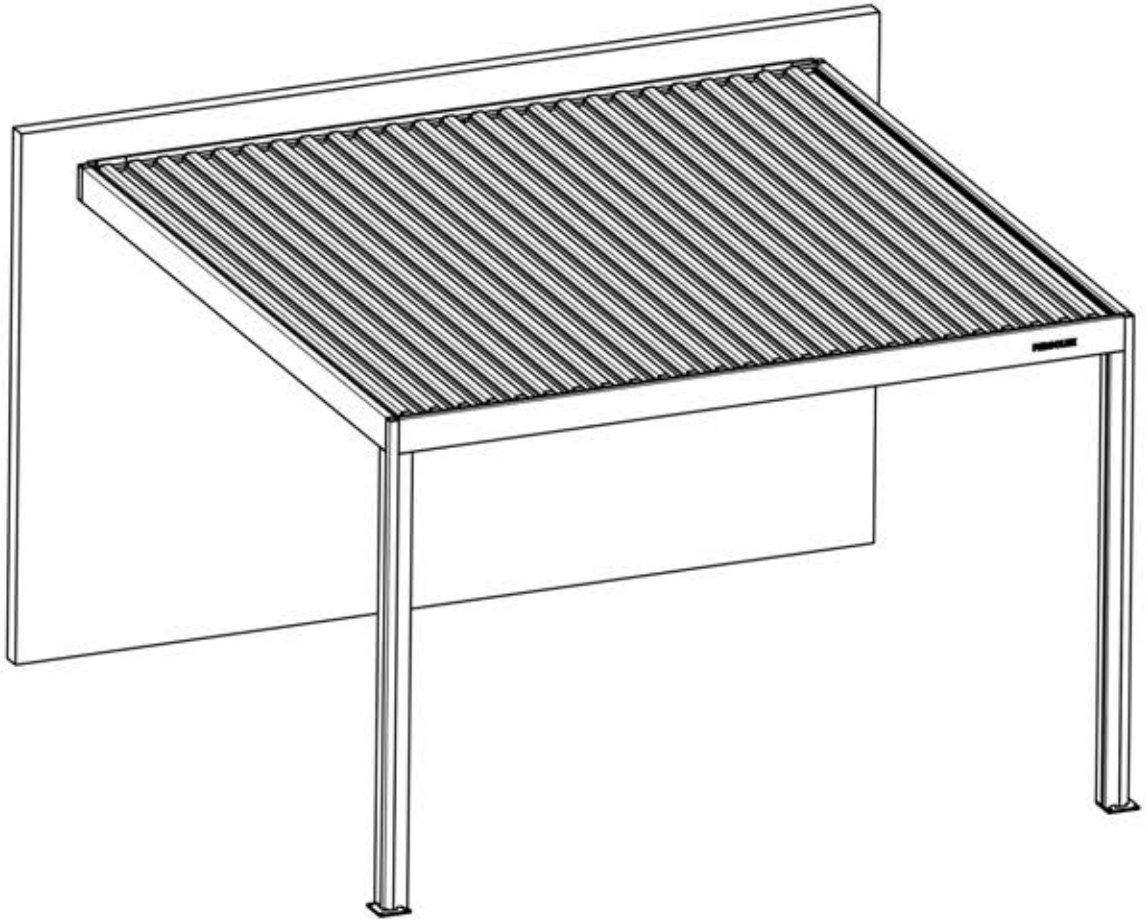

WALL MOUNTED

PERGOLUX

Designed and developed by PERGOLUX

10 Year GUARANTEE

reddot winner 2024

TÜVRheinland CERTIFIED

Type Approved
Regular
Production
Surveillance

www.tuv.com
ID 1111317678

PERGOLUX | CUSTOM DESIGN S4

INFORMATION

INSTALLATION INSTRUCTIONS:

Ensure all parts are present and undamaged before starting the assembly.

Secure to a solid foundation with the correct fasteners for your foundation.

(If applicable) Install motors and wiring as shown. Ensure the electrical components are powered off during installation.

Use the correct lifting and installation equipment.

SAFETY WARNINGS:
Keep children and pets away during installation.

Do not operate the structure if parts are loose or improperly installed.

Ensure the structure is securely anchored to prevent accidents.

Do not insert fingers or any objects between the louvres.

MAINTENANCE:
Regularly clean the aluminum structure to maintain its appearance and prevent the accumulation of dirt.

Also, make sure to clean the gutters regularly. Inspect moving parts for wear and lubricate as necessary.

Check anchor points periodically to ensure stability.

INSTALLATIONSANLEITUNG:

Stellen Sie sicher, dass alle Teile vorhanden und unbeschädigt sind, bevor Sie mit der Montage beginnen.

Befestigen Sie sie mit den richtigen Befestigungselementen für Ihr Fundament auf einem soliden Fundament.

(Falls zutreffend) Installieren Sie Motoren und Verkabelung wie gezeigt. Stellen Sie sicher, dass die elektrischen Teile während der Installation ausgeschaltet sind.

Verwenden Sie die richtige Hebe- und Installationsausrüstung.

SICHERHEITSHINWEISE:
Halten Sie Kinder und Haustiere während der Installation fern.

Betreiben Sie die Struktur nicht, wenn Teile lose oder nicht richtig installiert sind.

Stellen Sie sicher, dass die Struktur sicher verankert ist, um Unfälle zu vermeiden.

Stecken Sie keine Finger oder andere Gegenstände zwischen die Lamellen.

WARTUNG:
Reinigen Sie die Aluminiumstruktur regelmäßig, um ihr Aussehen zu erhalten und die Ansammlung von Schmutz zu verhindern.

Reinigen Sie auch die Dachrinnen regelmäßig. Überprüfen Sie bewegliche Teile auf Verschleiß und schmieren Sie sie bei Bedarf.

Überprüfen Sie die Ankerpunkte regelmäßig, um die Stabilität sicherzustellen.

CE

Pergolux GmbH, 9 Goethestraße,
36043 Fulda,
Germany
26
DOP-PRO-FSWM-S4

EN 13561:2015
Pergolux Pergola PRO S4
External use in buildings and other construction works
Resistance to wind loads: Class6(EN13561)

SYMBOL EXPLANATION



Indicates the outside of the pergola structure.



Indicates the inside of the pergola structure.



Important! Be cautious when assembling or handling this part.



Required tools for assembly.



Ensure grounding is connected before powering up.



Align slats according to sunlight direction for optimal shading.



Repeat this step as many times as the number indicates



Turn around



This step may require extra force.



Key information to follow during installation.



This item must be purchased separately.



Apply lubricant to make screw assembly easier.



Do not use a regular hammer, as it may cause damage.



AC Input



Motor



Variables



Repeat is variable

VARIABLES

Your Configurator length		Your variable
<1580	=	x9
<1730	=	x10
<1880	=	x11
<2030	=	x12
<2180	=	x13
<2330	=	x14
<2480	=	x15
<2630	=	x16
<2780	=	x17
<2930	=	x18
<3080	=	x19
<3230	=	x20
<3380	=	x21
<3530	=	x22
<3680	=	x23
<3830	=	x24
<3980	=	x25
<4130	=	x26
<4280	=	x27
<4430	=	x28
<4580	=	x29
<4730	=	x30
<4880	=	x31
<5060	=	x32
<5360	=	x34
<5660	=	x36
<5960	=	x38

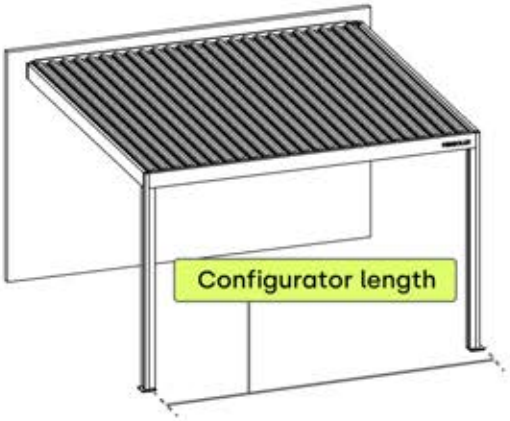



VARIABLES WALL MOUNTED

Your Configurator length		Your variable
<3000	=	x4
<3900	=	x5
>3900	=	x6

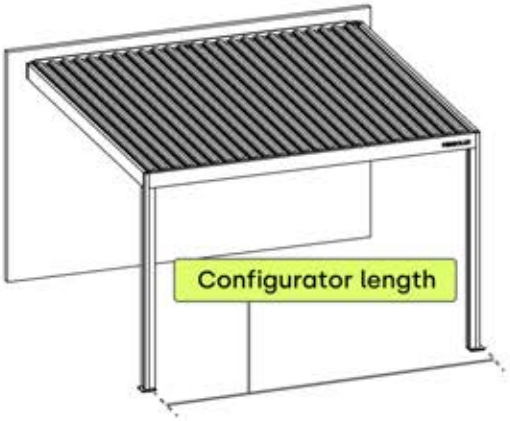

Variables



PN-200000510

Variable



PN-200000669

Variable



PN-200000655

Variable

INFORMATION

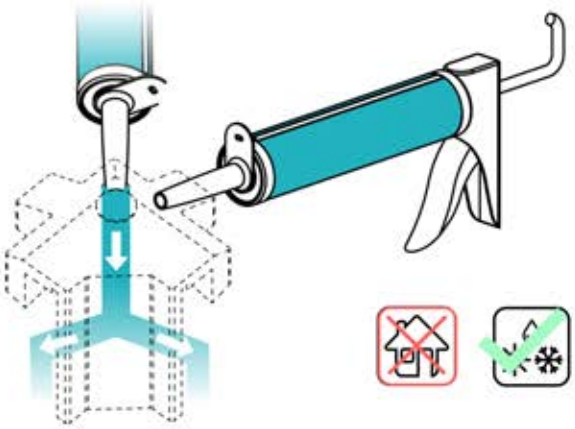

Use a high-quality, weather-resistant and mold-resistant adhesive and sealant to seal the corners of the pergola and prevent leakage. Look for products that are designed for outdoor use and provide a strong, long-lasting bond.

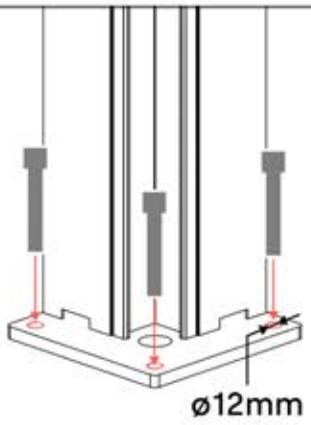

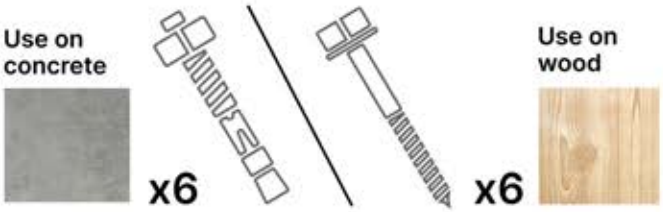

You need to buy 10 mm screws to attach the pergola to the ground

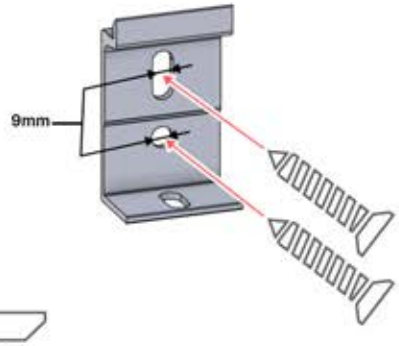



You need to buy 8 mm screws to attach the pergola to the wall



INFORMATION

All screws from **PERGOLUX** are made of stainless steel, ensuring durability and resistance to rust. To prevent damage to screws, follow these guidelines:

- **DO NOT OVERTIGHTEN**: Apply appropriate force to avoid stripping the threads.
- **CHOOSE THE CORRECT TOOL:** Use the proper screwdriver or bit to avoid damaging the screw head.
- **ENSURE PROPER USE:** With correct installation, screws will maintain their integrity and functionality over time.
- **USE LUBRICATION:** Apply lubricant to make screw assembly easier.



TOOLS



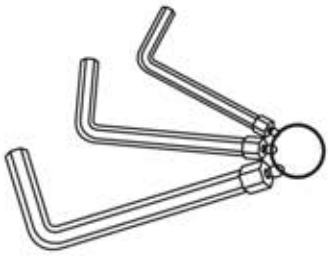

3mm, 4mm, 5mm



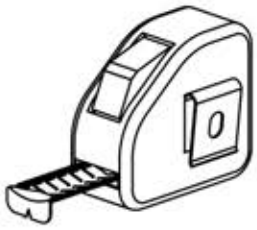





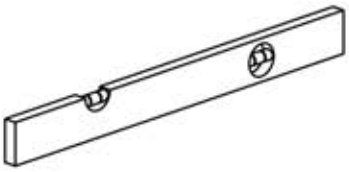



TX15, TX20, TX25, TX30



PERGOLUX | CUSTOM DESIGN S4

PACKAGE OVERVIEW

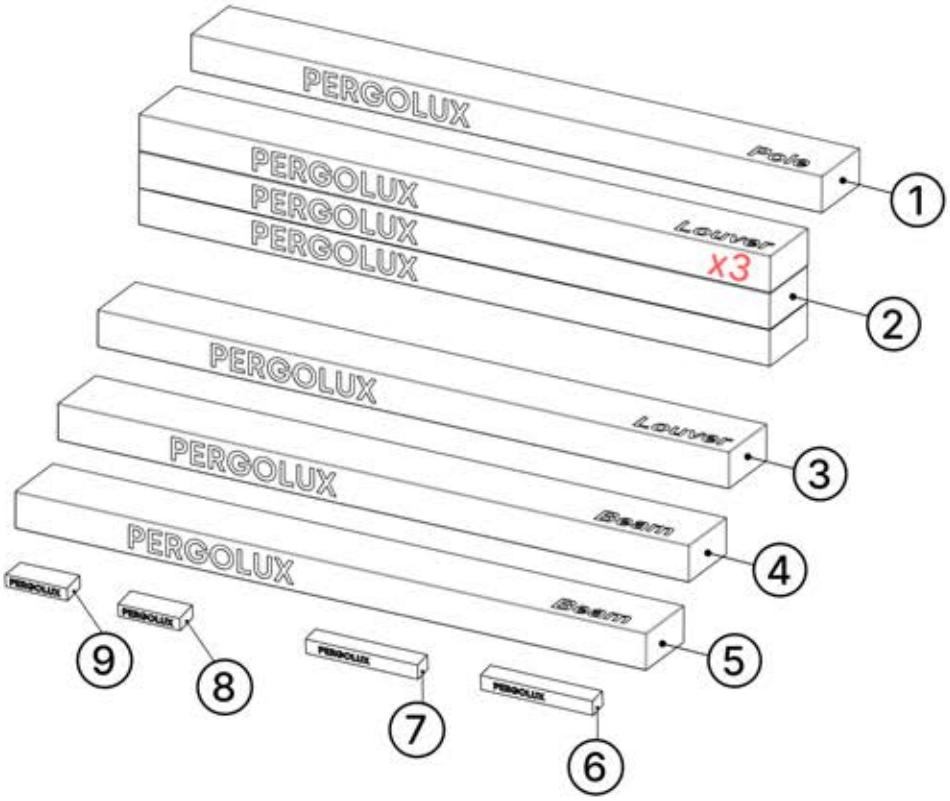

ORDER	ANTHRACITE	WHITE	BLACK
1	C120	C122	C121
2	L222	L226	L224
3	L234	L238	L236
4	B245	B253	B249
5	B263	B267	B265
6	WHITE / RGB LED		
7	MOTOR		
8	CONTROL BOX		
9	POWER CABLE		

ITEMS IN BOX

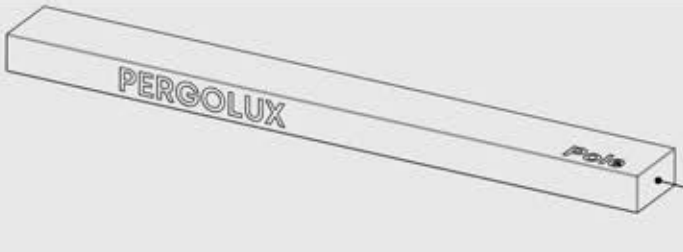

	ANTHRACITE	WHITE	BLACK
1	C120	C122	C121



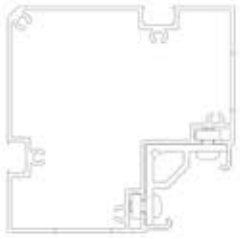

PN-200002606

2x





PN-200003386

2x



PN-200002614

2x

ITEMS IN BOX

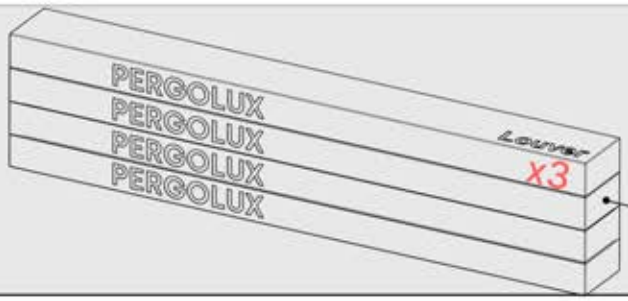

2

ANTHRACITE	WHITE	BLACK
L222	L226	L224

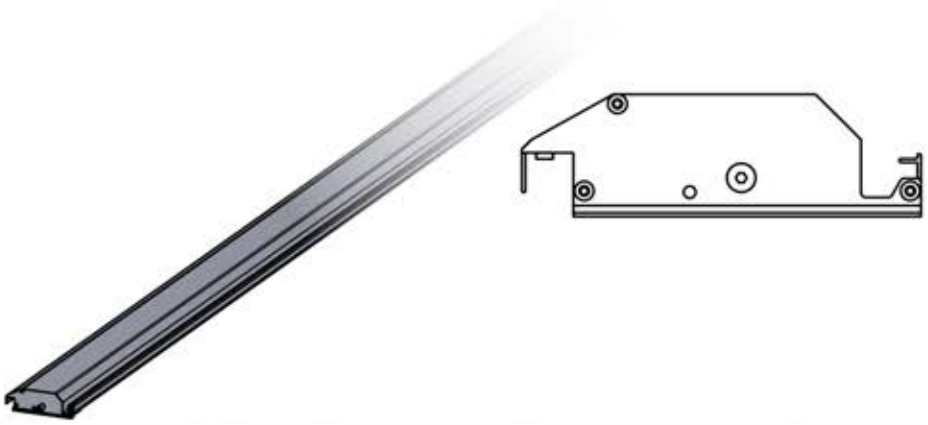

PN-200002883

Variable



3

ANTHRACITE	WHITE	BLACK
L234	L238	L236



PN-200002883

Variable

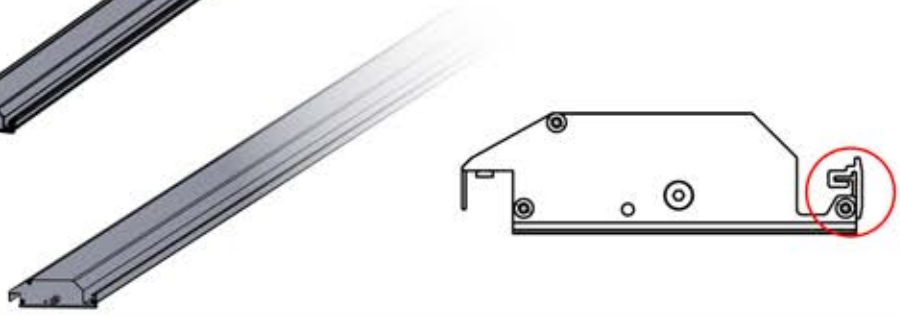

PN-200002975

1x

ITEMS IN BOX



4

ANTHRACITE	WHITE	BLACK
B245	B253	B249



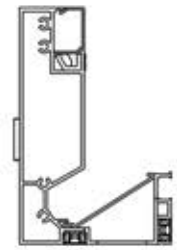

PN-200003283

1x



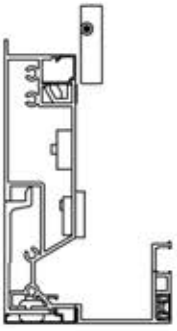

PN-200003388

1x





PN-200002623

1x



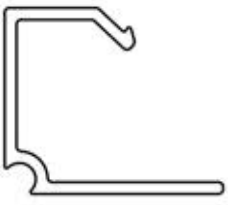

PN-200002609

1x





PN-200002613

1x

ITEMS IN BOX

Note: If accessory bags lack part number stickers, refer to the manual for identification.



4

ANTHRACITE	WHITE	BLACK
B245	B253	B249





PN-200002633
1x





PN-200003329
1x





PN-200003382
1x

Zip Bag PN-20000 3326

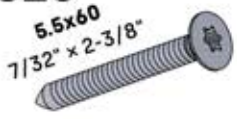

PN-200000560
10x

Zip Bag PN-20000 3320



PN-200000826
2x

Zip Bag PN-20000 3302



PN-200001514
4x



PN-200003323
1x



PN-200003322
1x

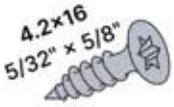

PN-200000840
18x

ITEMS IN BOX

Note: If accessory bags lack part number stickers, refer to the manual for identification.



	ANTHRACITE	WHITE	BLACK
4	B245	B253	B249

PN-20000 3278



PN-200003030
1x



PN-200003031
1x

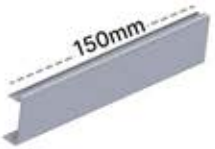

PN-200003033
2x



PN-200001207
2x

PN-20000 3279



PN-200000568
32x

PN-20000 3379



PN-200000960
4x

PN-20000 3276



PN-200002618
4x



PN-200000571
4x

PN-20000 3365



PN-200000507
4x



PN-200000569
8x



PN-200000568
2x



PN-200000516
2x

PN-20000 3364

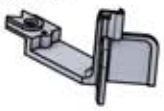

PN-200002792
2x



PN-200002617
2x

PERGOLUX | CUSTOM DESIGN S4

ITEMS IN BOX

Note: If accessory bags lack part number stickers, refer to the manual for identification.



	ANTHRACITE	WHITE	BLACK
4	B245	B253	B249

PN-20000 Zip Bag **3371**



PN-200003372
1x



PN-200001946
1x



PN-200000502
1x



PN-200003373
1x



PN-200000561
1x

PN-20000 Zip Bag **3281**



PN-200002622
4x



PN-200000680
8x

PN-20000 Zip Bag **3284**

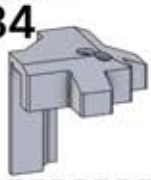

PN-200002625
4x

PN-20000 Zip Bag **3309**



PN-200003308
2x



PN-200003324
2x

PN-20000 Zip Bag **3305**



PN-200000510
Variable



PN-200000669
Variable



PN-200000655
Variable



PN-200001340
1x

ITEMS IN BOX



	ANTHRACITE	WHITE	BLACK
5	B263	B267	B265



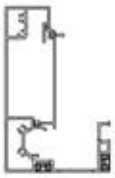

PN-200003358

1x



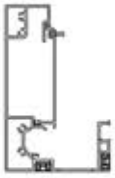

PN-200003359

1x





Premounted
PN-200002903

2x





PN-200003204

2x

ITEMS IN BOX



6 WHITE / RGB LED

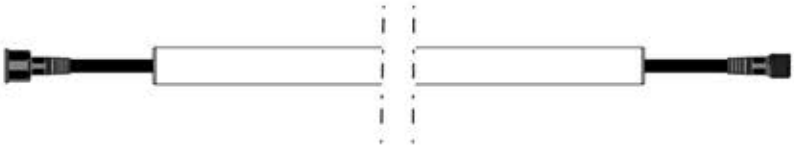

LED light strip

4x



Y cable

1x



7 ELECTRIC MOTOR



Electric motor
PN-200001562
1x



PN-200001623

1x



PN-200001624

1x



PN-200001625

2x

ITEMS IN BOX

** Only if you ordered LED lights to your pergola.



8 CONTROL BOX



Control box

1x



PN-200002756

1x



Matter antenna clip

1x



PN-200002754

1x



PN-200002684

10x



PN-200002758

1x



PN-200002683

5x



PN-200002753

2x



QR-code

1x



PN-200002759

2x



3M tape

1x



PN-200002757

1x

ITEMS IN BOX

** Only if you ordered LED lights to your pergola.



9

POWER CABLE



Power cable

1x

All electric parts should be tested before installation.

LEDs + Motor (and heater) should be connected to the Control box and programmed to ensure functionality.

Matter + Smart home can be connected at anytime by simply scanning the QR code provided



CONTROL BOX

View Manual

TEST OF ELECTRONICS

** Only if you ordered LED lights to your pergola.

All electric parts should be tested before installation.

LEDs + Motor (and heater) should be connected to the Control box and programmed to ensure functionality.

Matter + Smart home can be connected at anytime by simply scanning the QR code provided

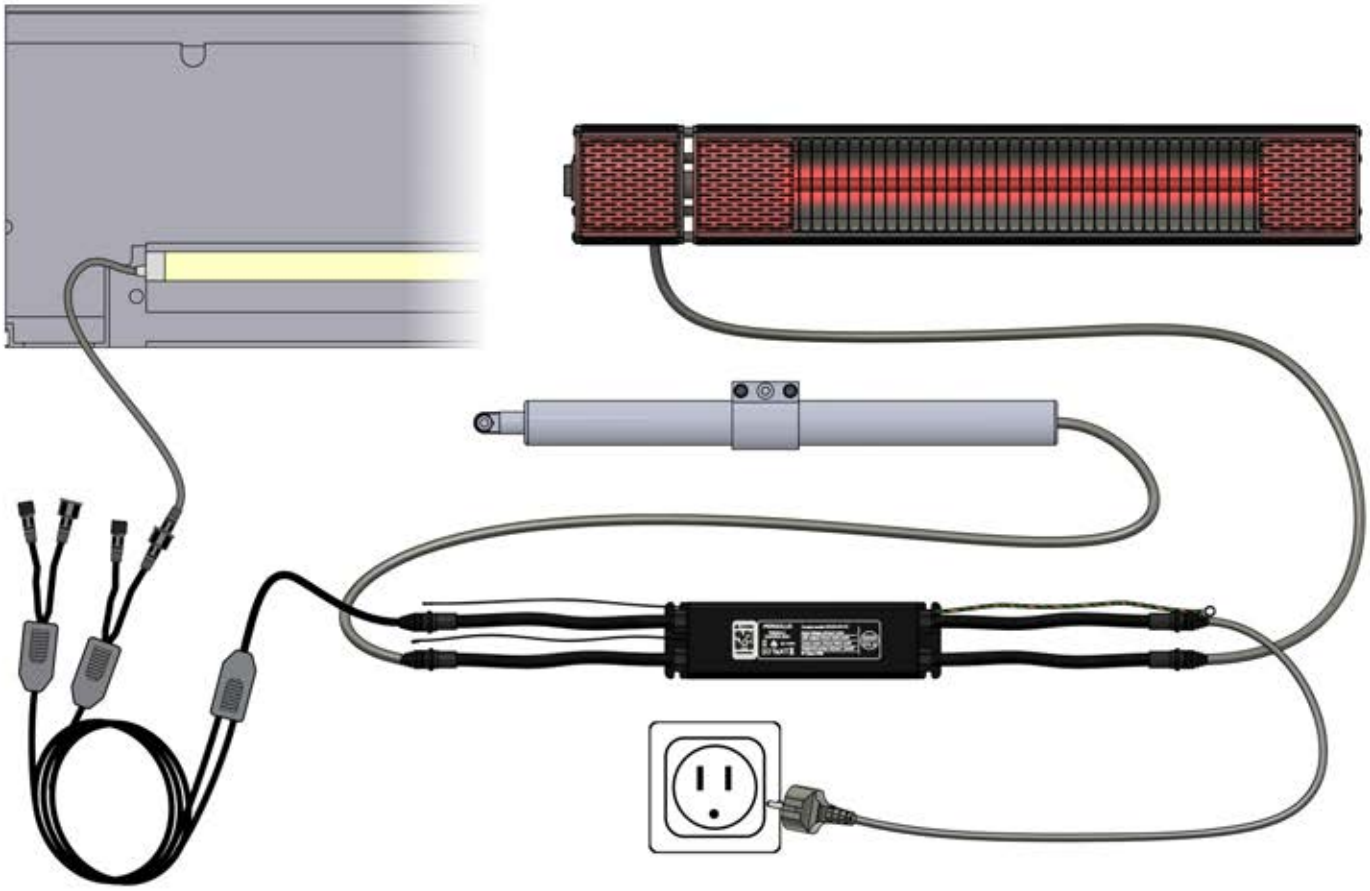

PERGOLUX | CUSTOM DESIGN **S4**

WALL MOUNTED

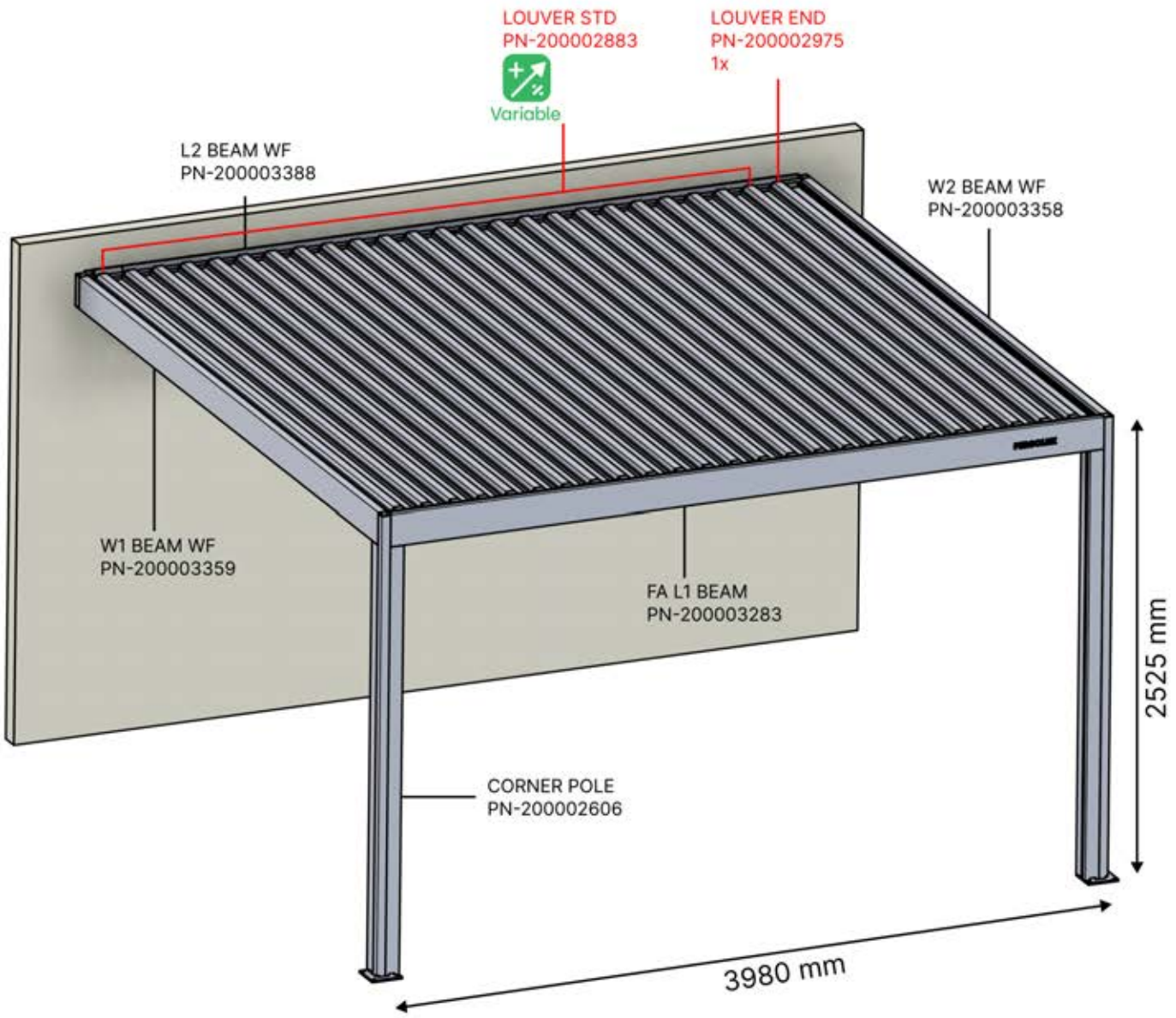

PERGOLUX | CUSTOM DESIGN **S4**

WALL MOUNTED

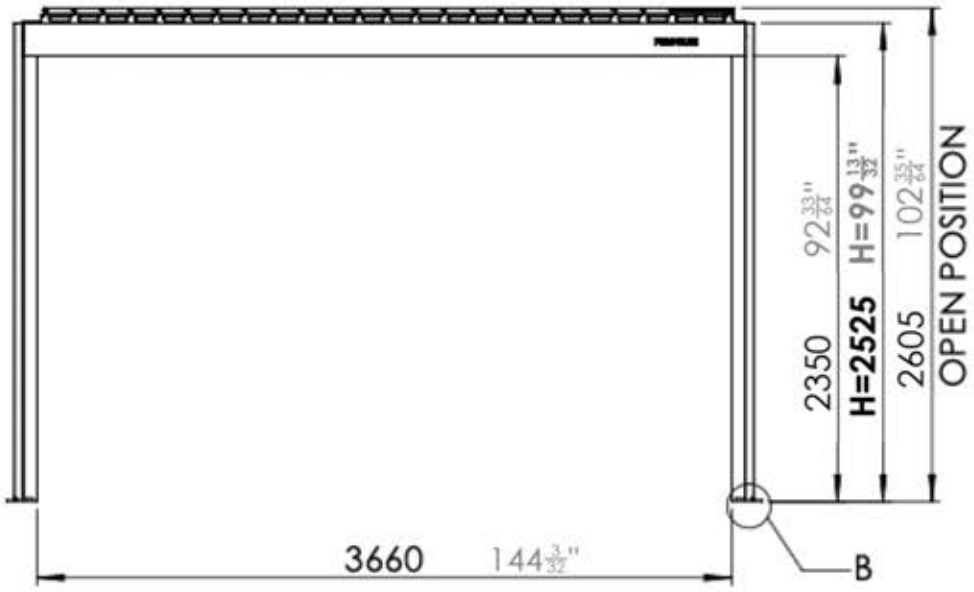

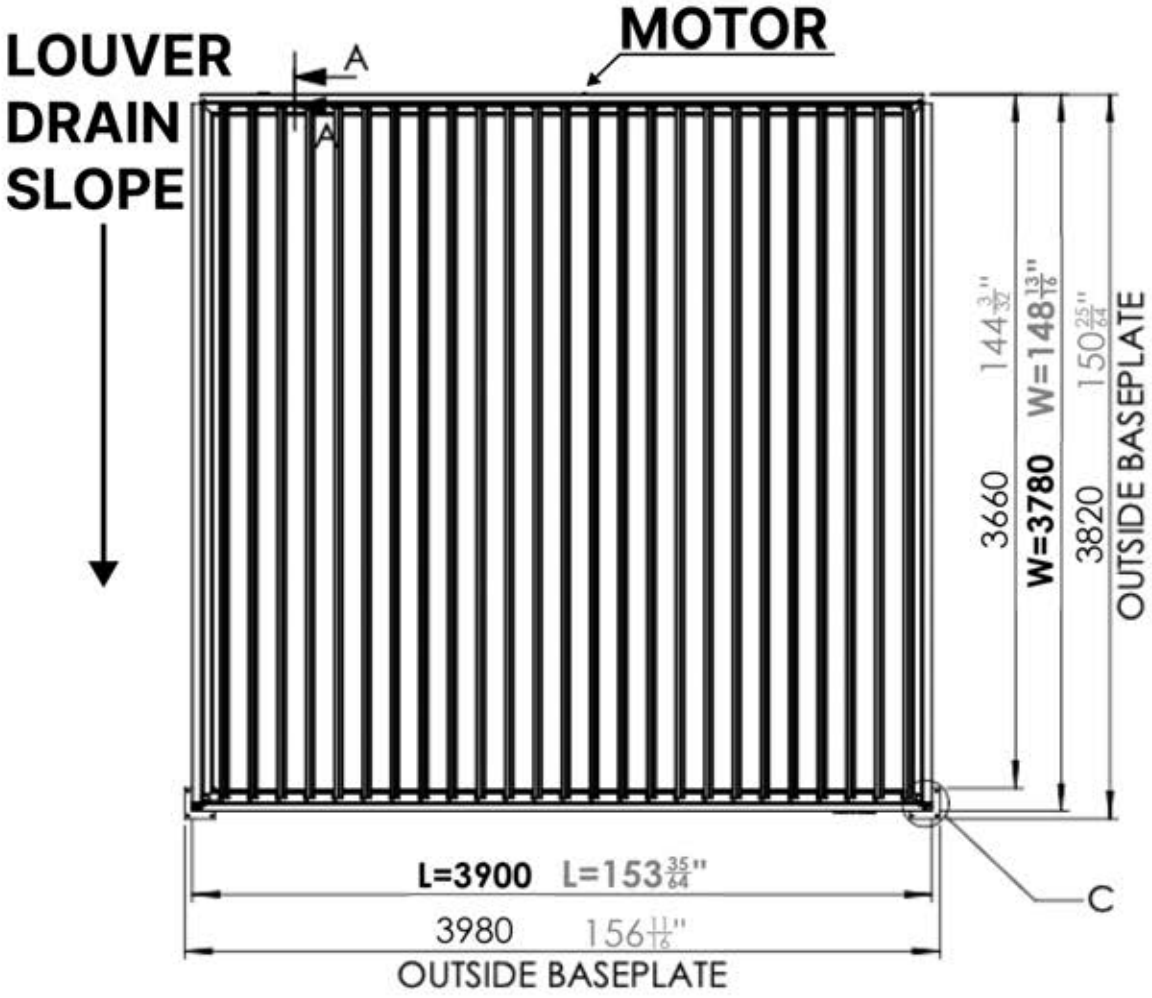

INFORMATION

Are you installing a screen, slat wall or glass wall?

It is recommended to remove these Snapfit covers and clips now before installing the pergola.

Cover and clips



PN-200000512
SnapFIT cover clip



SnapFIT cover

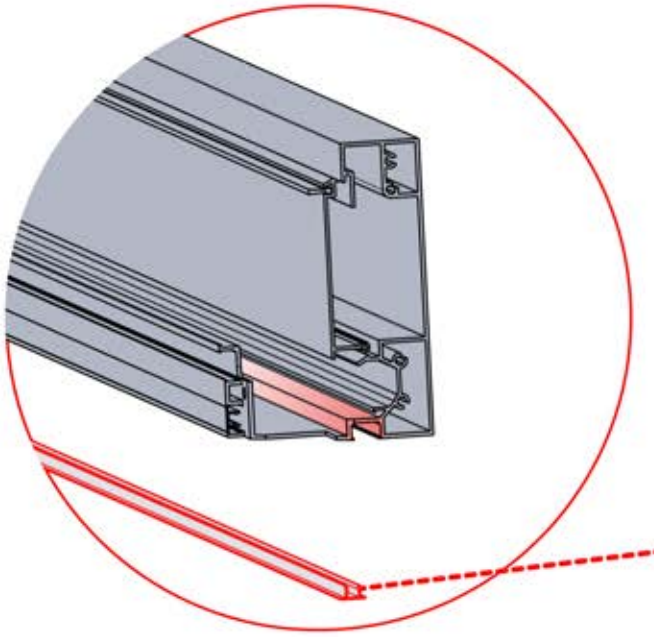

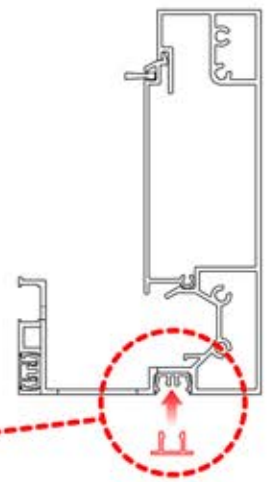

INFORMATION

Are you installing a heater, fan or LED lights?

It is recommended to remove both snap-fit covers from the beam now.

Cover and clips



PN-200000512
SnapFIT COVER CLIP



SnapFIT cover

INFORMATION

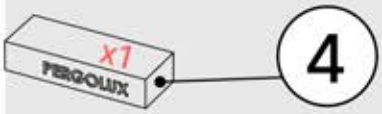

4

ANTHRACITE: B245
WHITE: B253
BLACK: B249

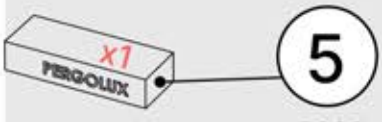

5

ANTHRACITE: B263
WHITE: B267
BLACK: B265

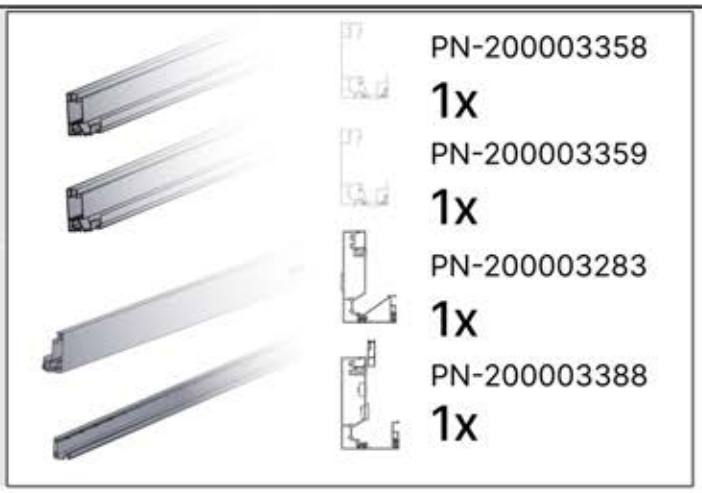

PN-200003358
1x

PN-200003359
1x

PN-200003283
1x

PN-200003388
1x

PN-200003283

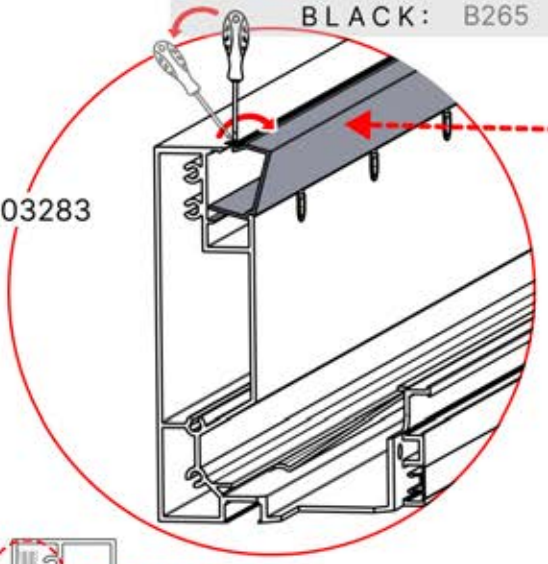

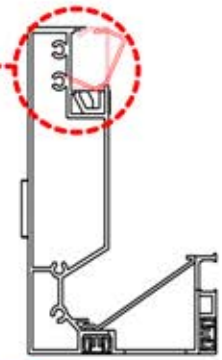

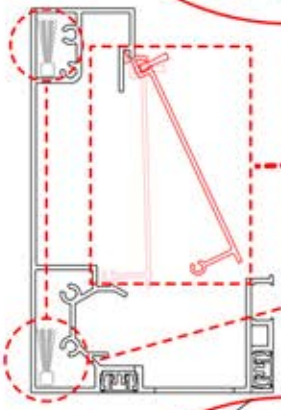

PN-200003358

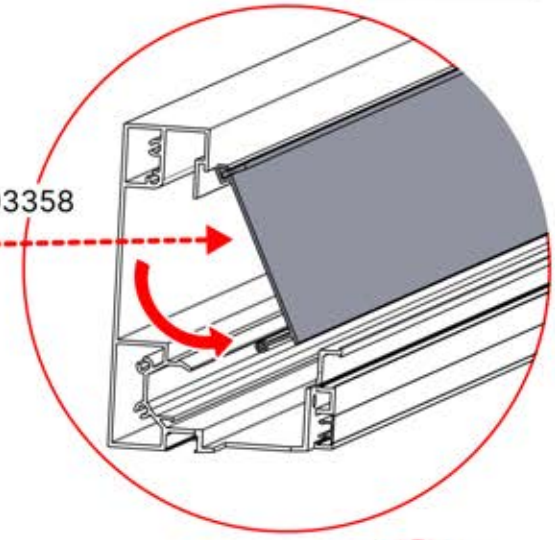

Remove the brush from the beam and set it aside. It will be installed during a later step in the manual.

PN-200003388

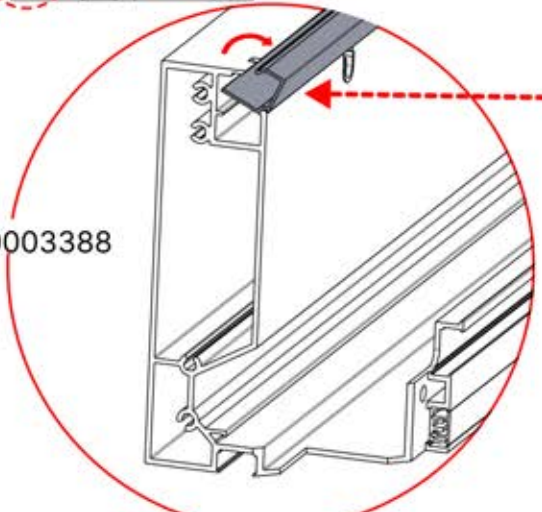

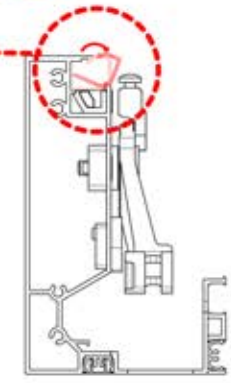

01

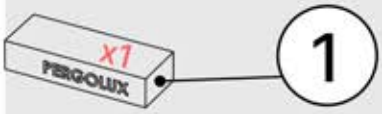

ANTHRACITE: C120
WHITE: C122
BLACK: C121

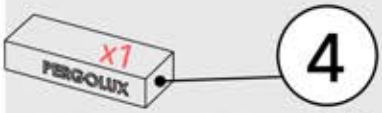

ANTHRACITE: B245
WHITE: B253
BLACK: B249



PN-200002606
2x



PN-200002614
2x

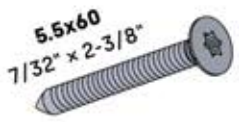

PN-200000560
10x

PN-20000
3326 Zip Bag

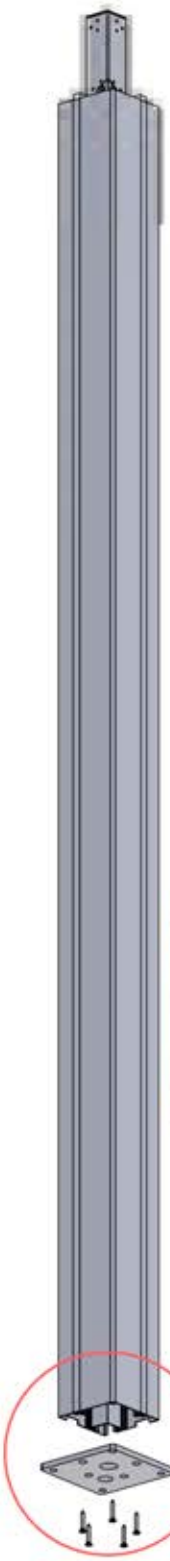

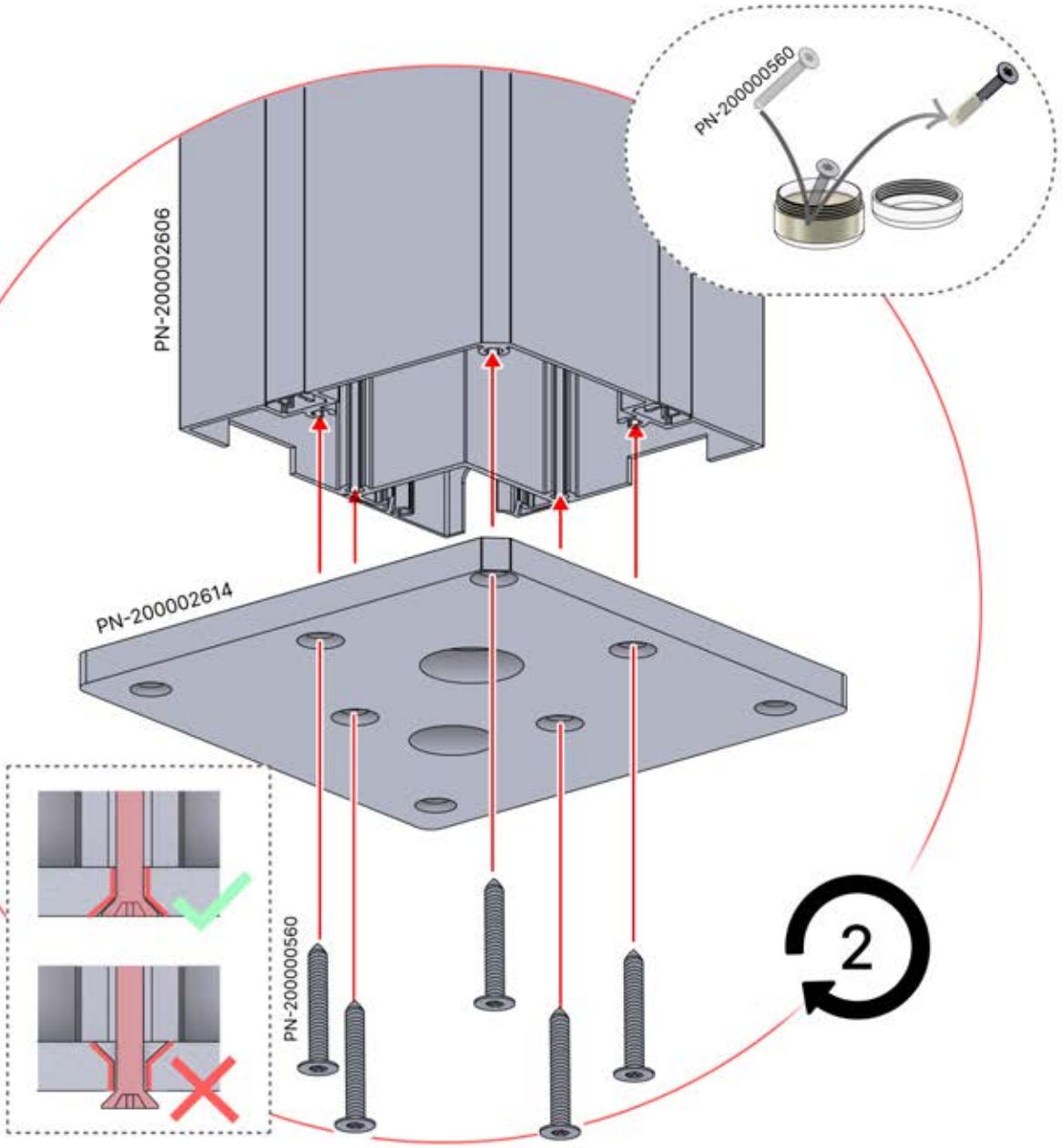

02

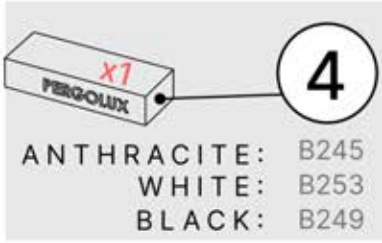



PN-200000510

Variable

PN-20000 3305 Zip Bag



Variable

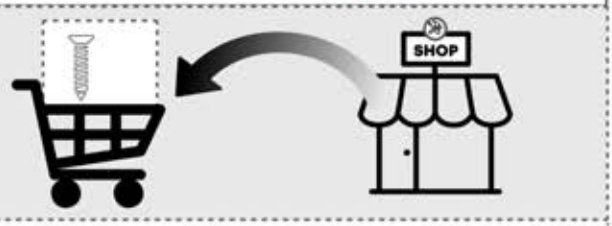

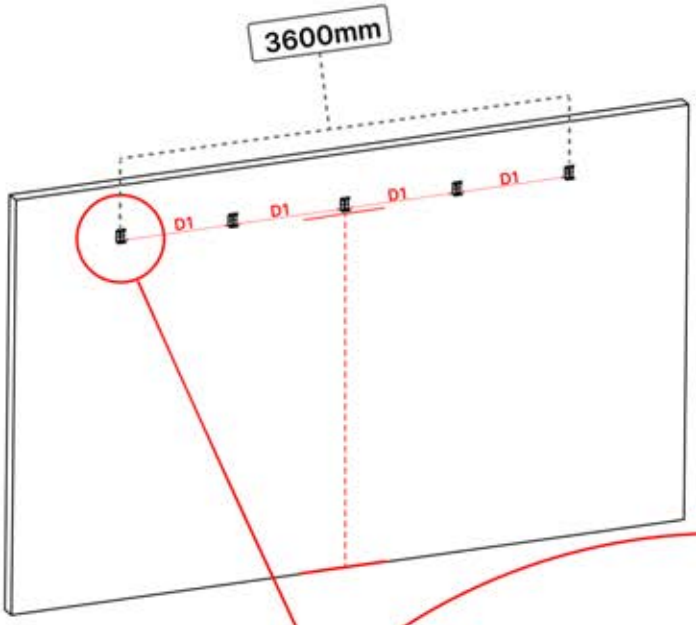

Install the first and last wall mount brackets (PN-200000510) **3600 mm** apart. Position the remaining brackets in between, ensuring they are evenly distributed.

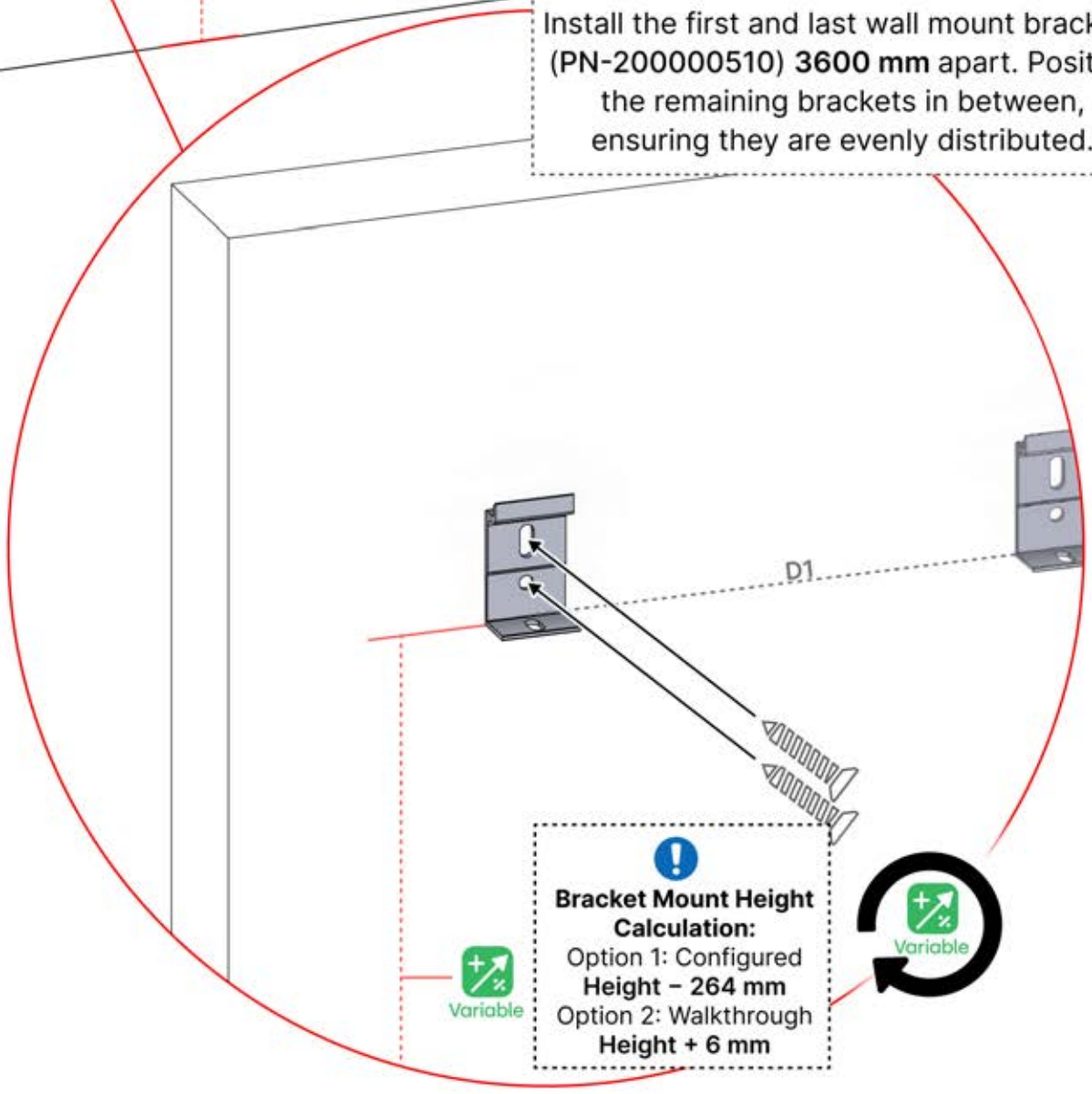

03

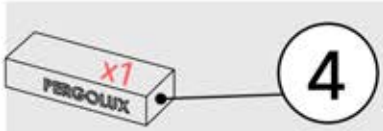

ANTHRACITE: B245
WHITE: B253
BLACK: B249



PN-200003388
1x

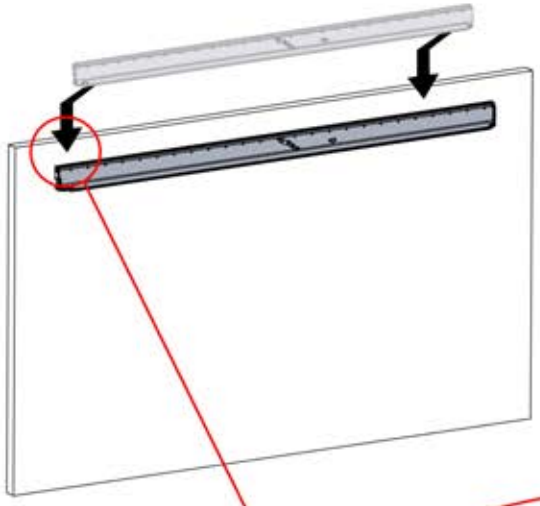

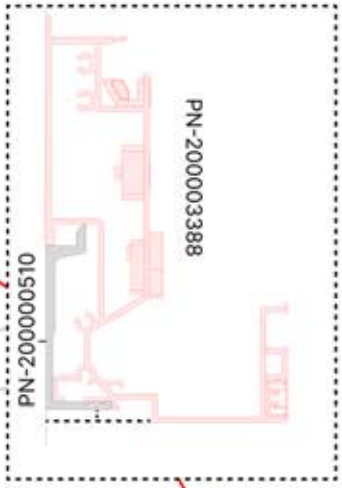

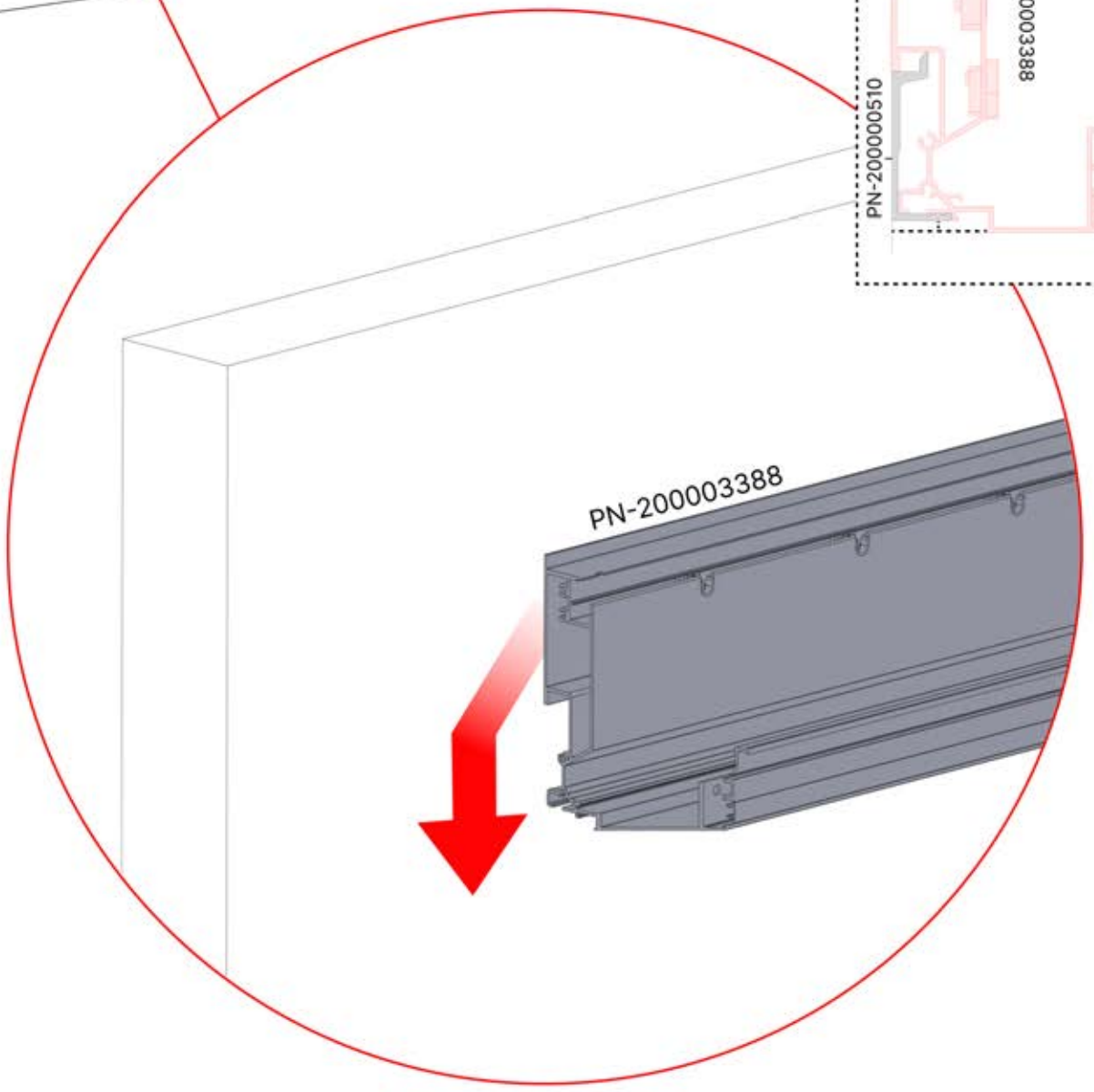

04

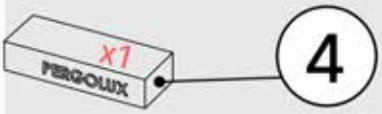

4

ANTHRACITE: B245
WHITE: B253
BLACK: B249

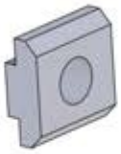

PN-200000669

Variable

PN-20000 3305 Zip Bag

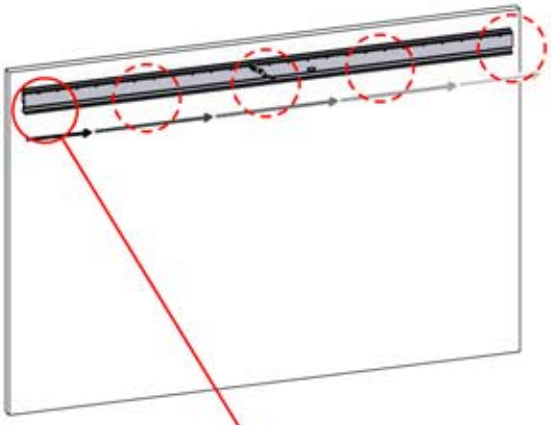

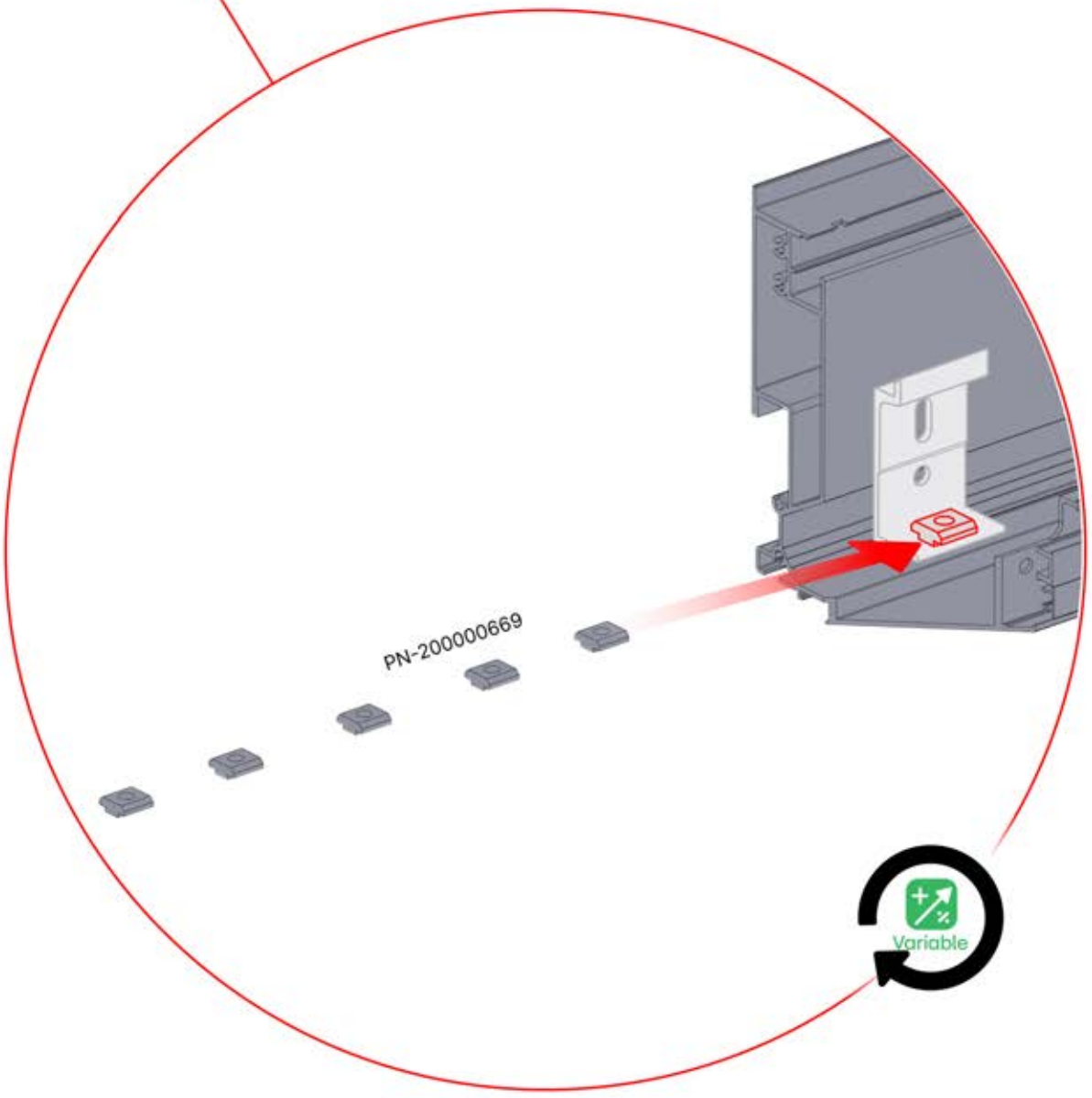

05

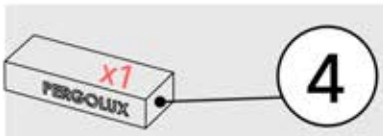

4

ANTHRACITE: B245
WHITE: B253
BLACK: B249



PN-200000655

Variable

PN-20000
3305
Zip Bag

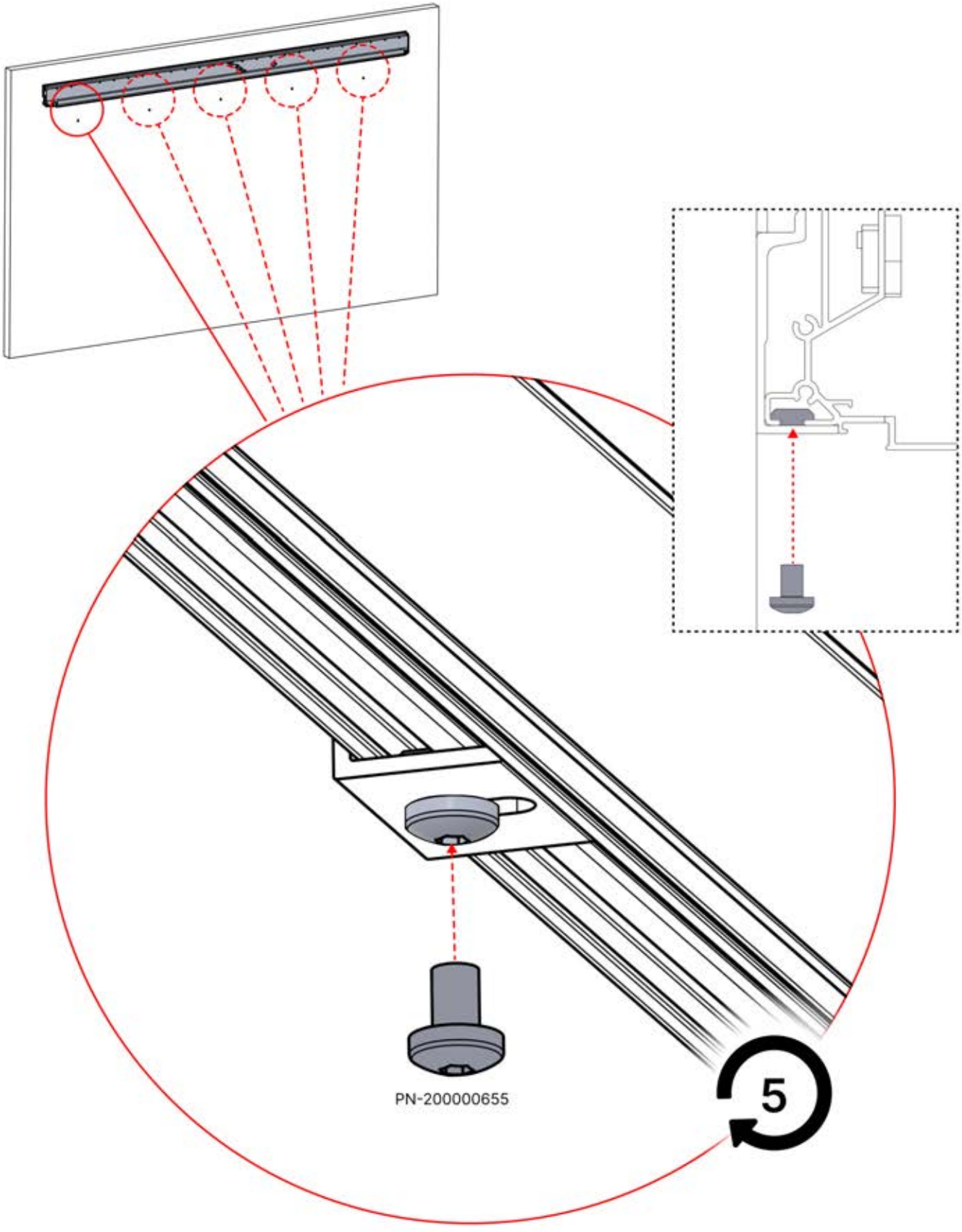

06

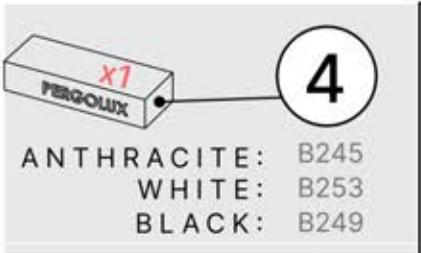

4

ANTHRACITE: B245
WHITE: B253
BLACK: B249

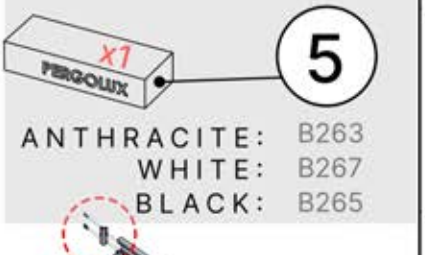

5

ANTHRACITE: B263
WHITE: B267
BLACK: B265





PN-200003358
1x



PN-200003359
1x



PN-200003308
2x
PN-20000 3309 Zip Bag



PN-200000568
8x
PN-20000 3279 Zip Bag

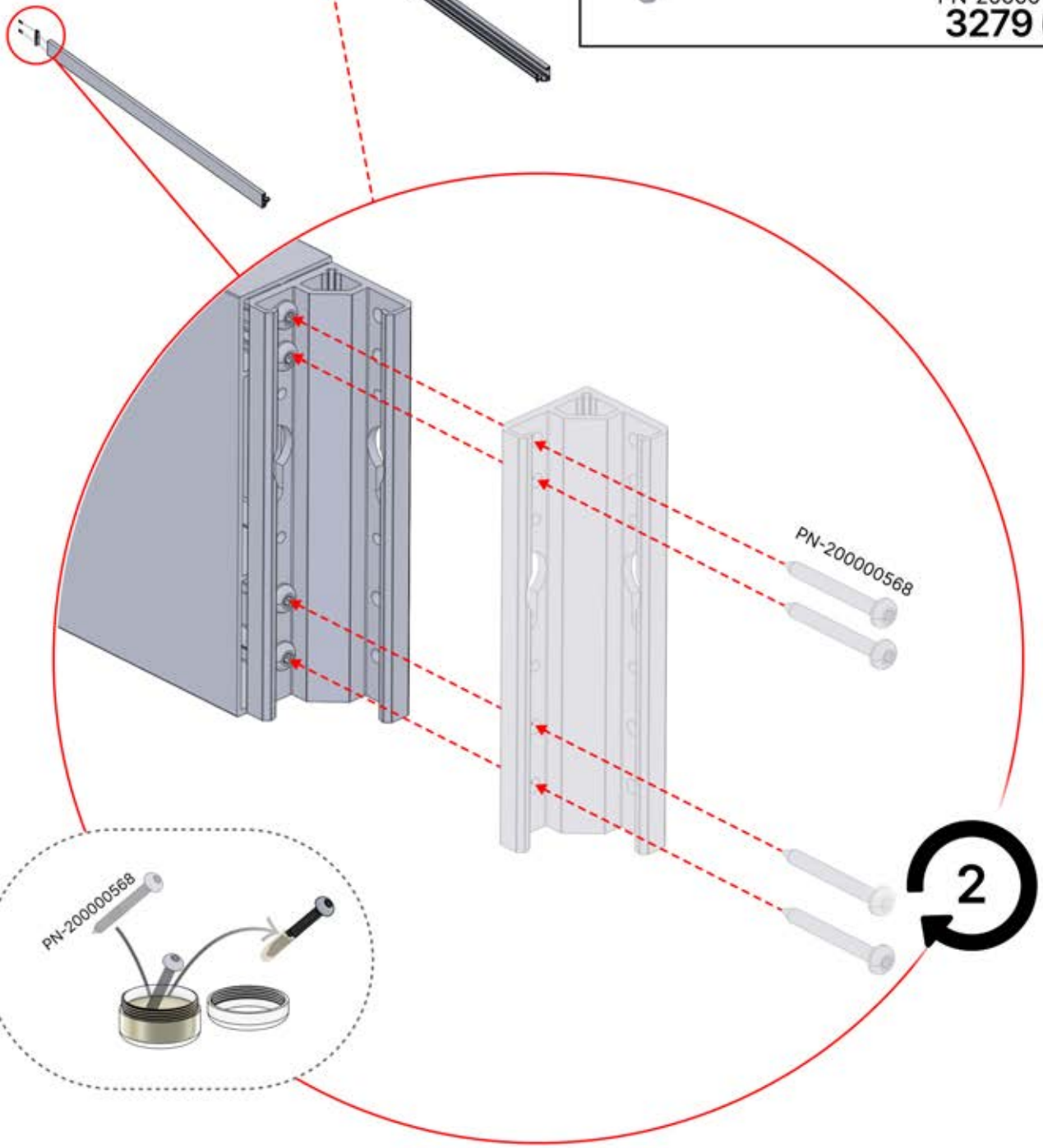

07

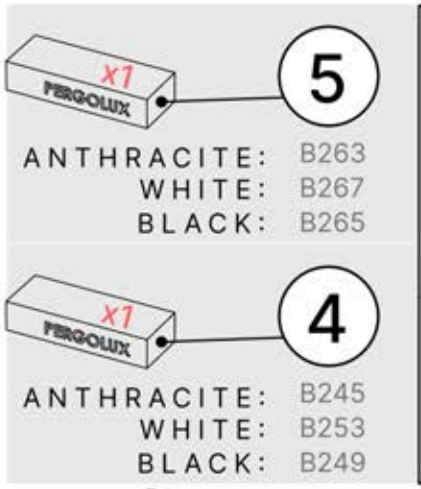
x1
PERGOLUX
5
ANTHRACITE: B263
WHITE: B267
BLACK: B265
x1
PERGOLUX
4
ANTHRACITE: B245
WHITE: B253
BLACK: B249


PN-200003358
1x
PN-200003359
1x
PN-200000568
8x
PN-20000
3279
Zip Bag

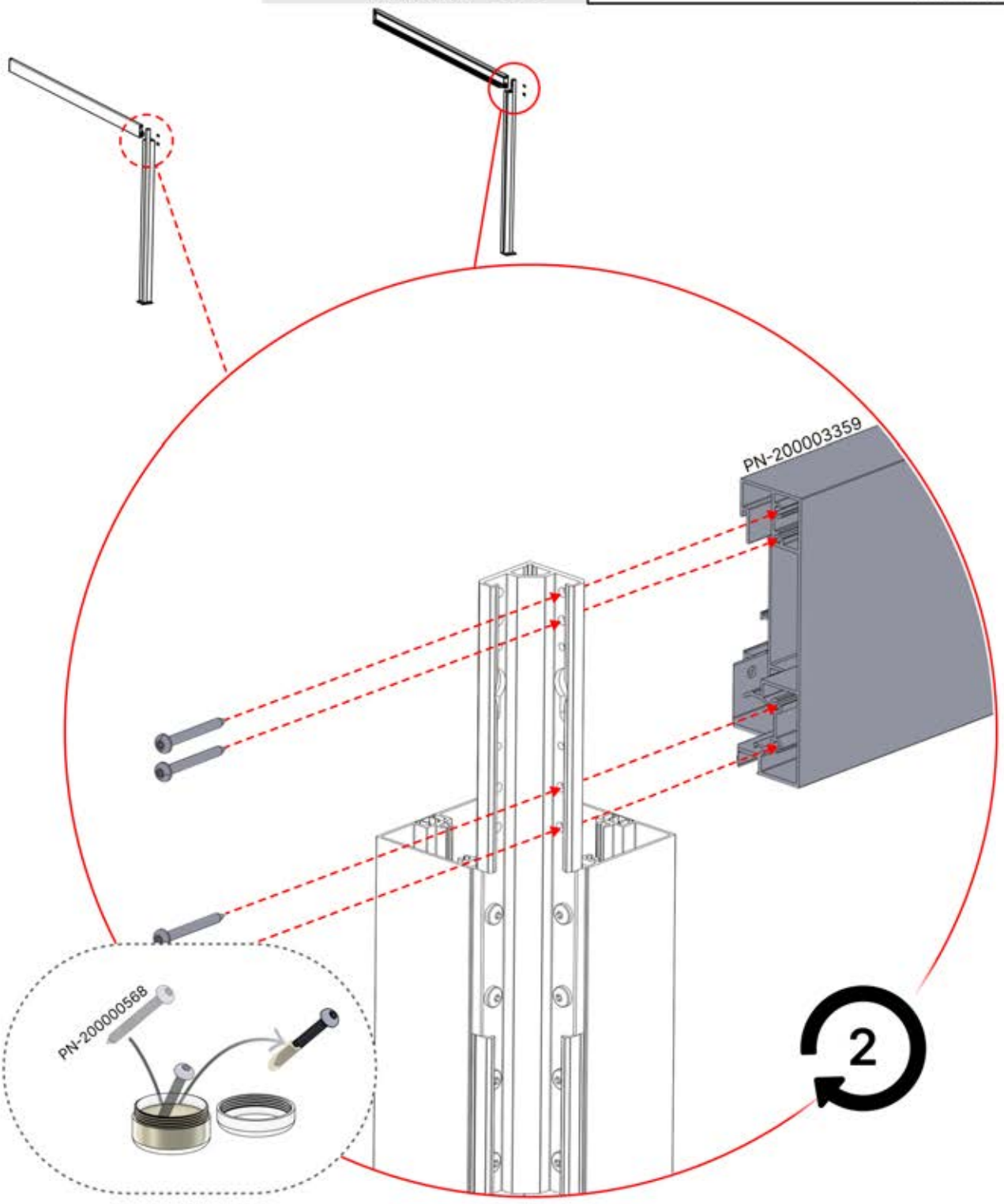
PN-200003359
PN-200000568
2

08

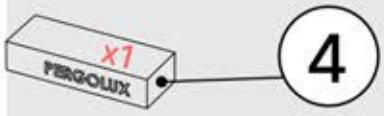

4

ANTHRACITE: B245
WHITE: B253
BLACK: B249



PN-200000507
2x

PN-20000
3365 Zip Bag

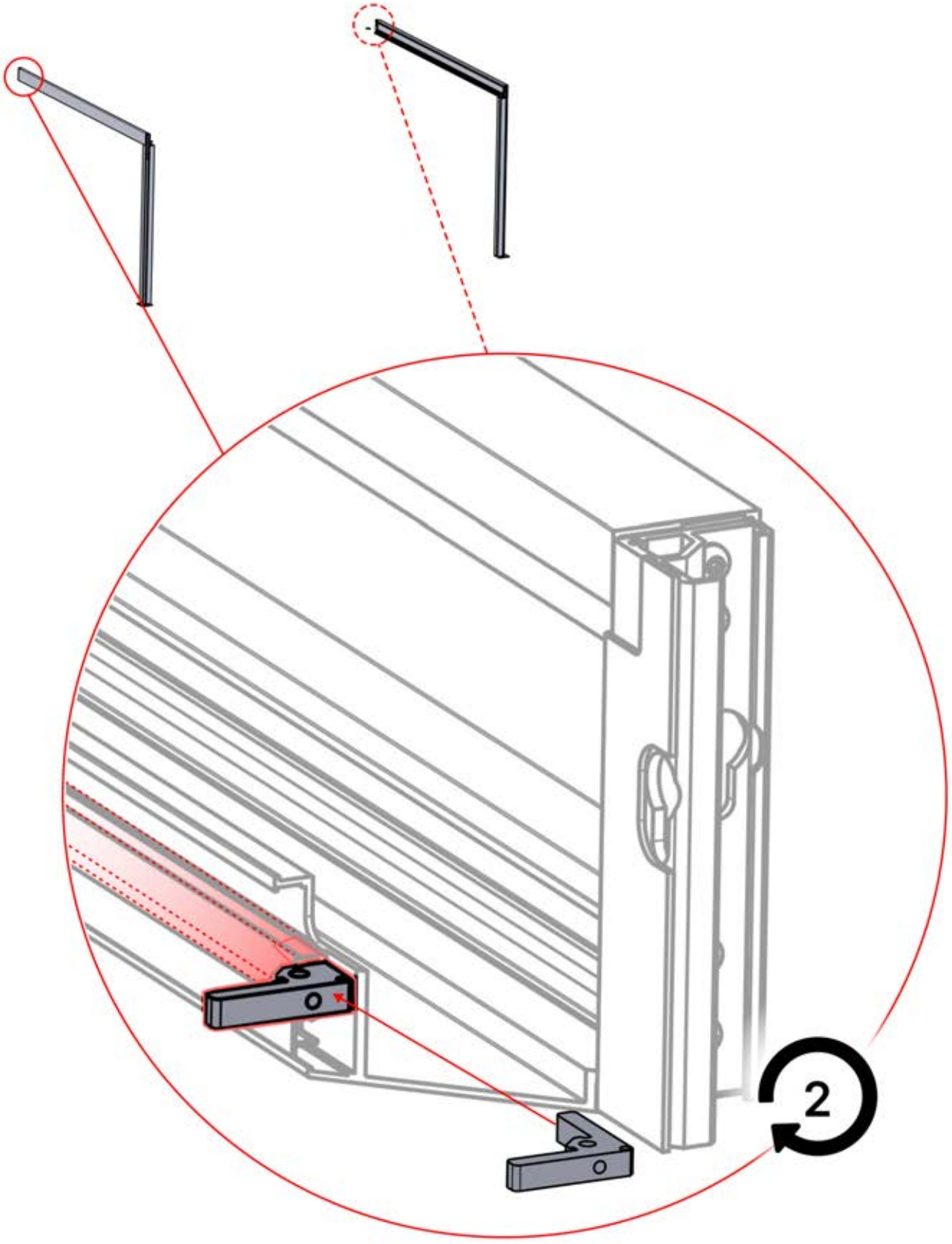

09

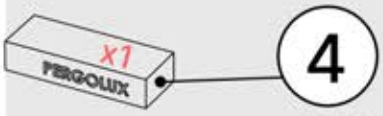

ANTHRACITE: B245
WHITE: B253
BLACK: B249



PN-200002622
4x
PN-20000
3281
Zip Bag

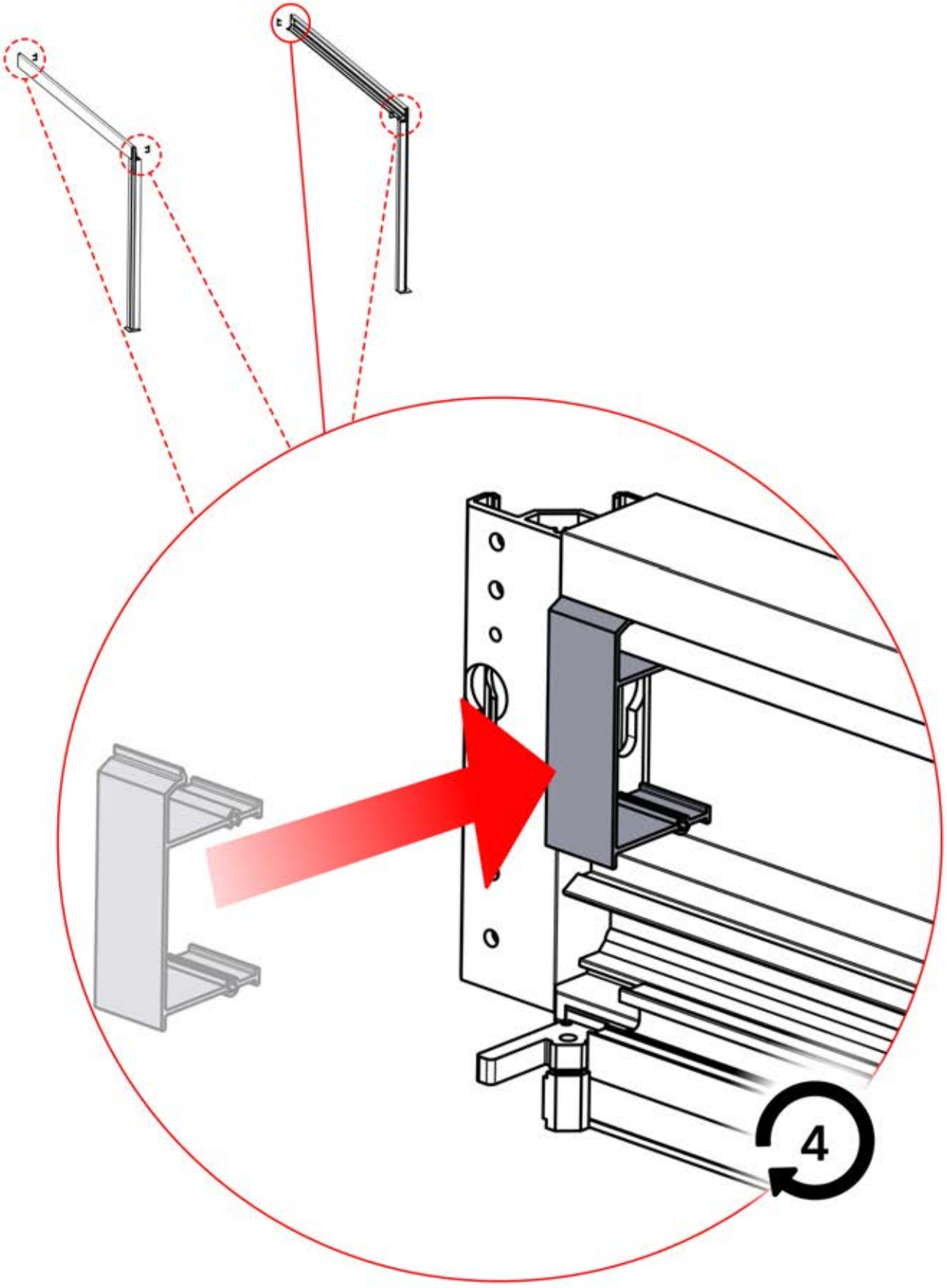

10

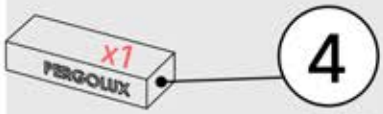

ANTHRACITE: B245
WHITE: B253
BLACK: B249



PN-200000680
8x

PN-20000
3281 Zip Bag

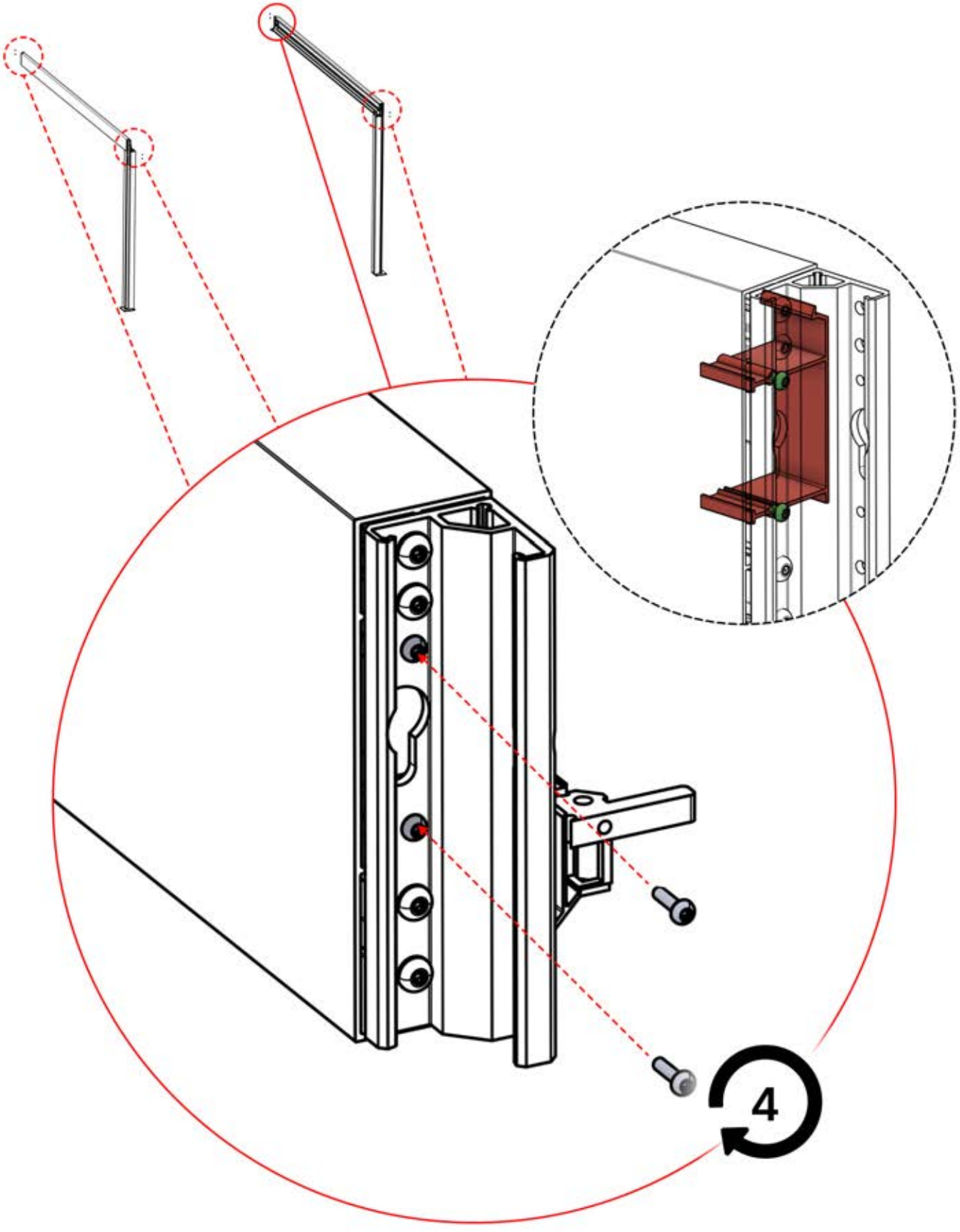

11

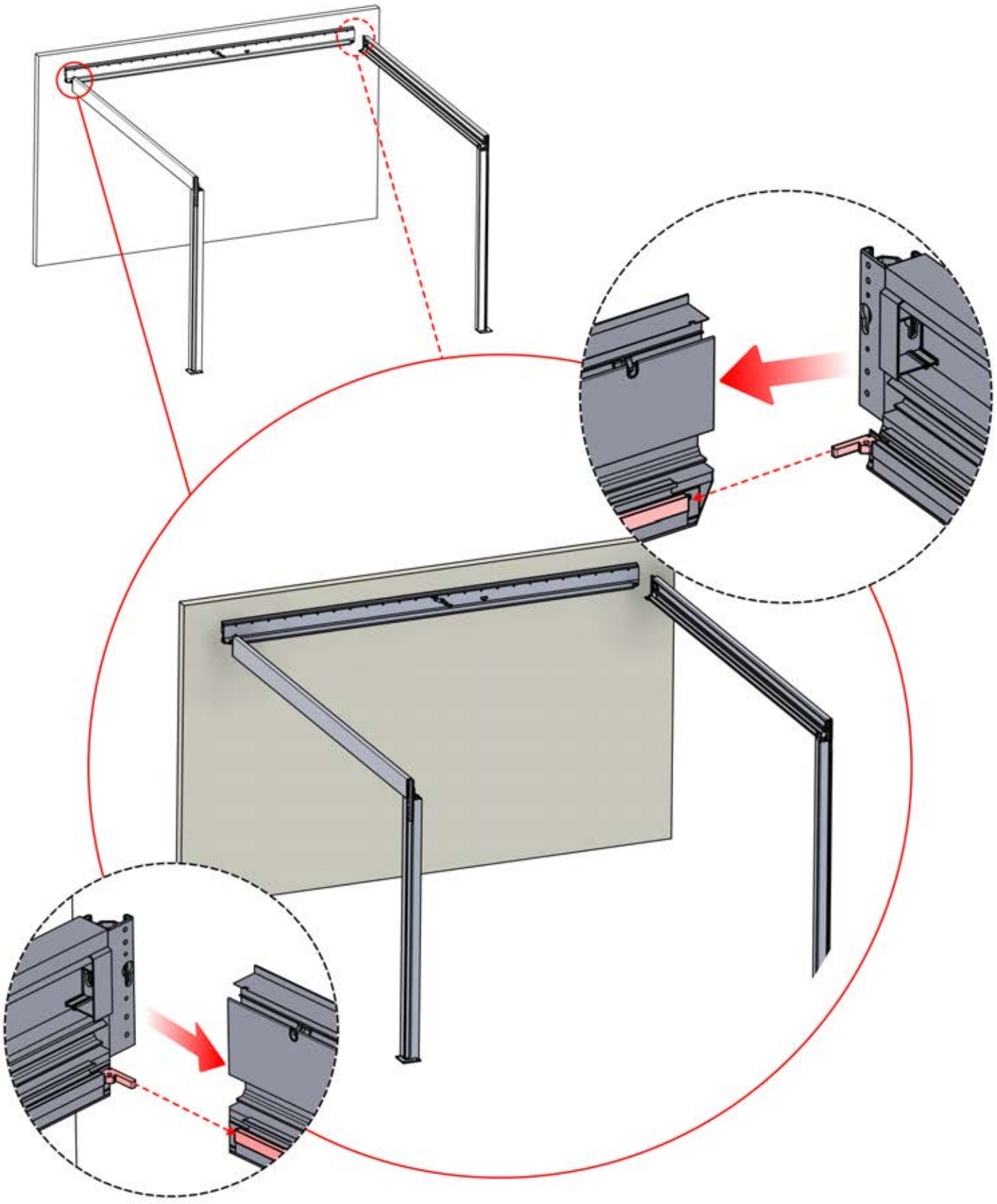

12



4

ANTHRACITE: B245
WHITE: B253
BLACK: B249



PN-200000568

8x

PN-20000
3365
Zip Bag

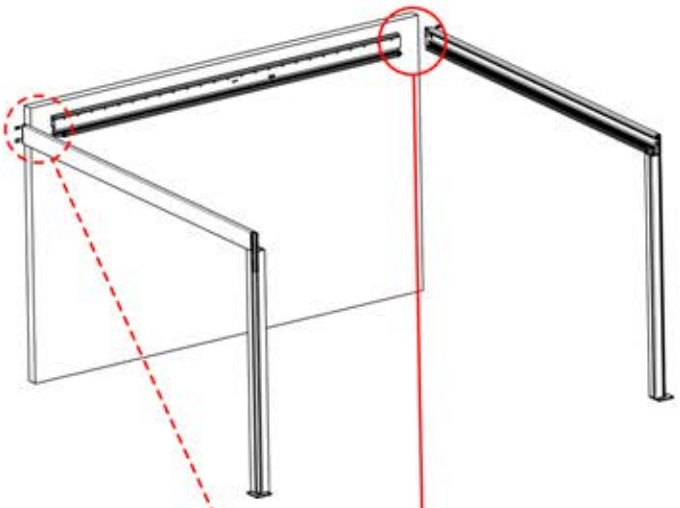

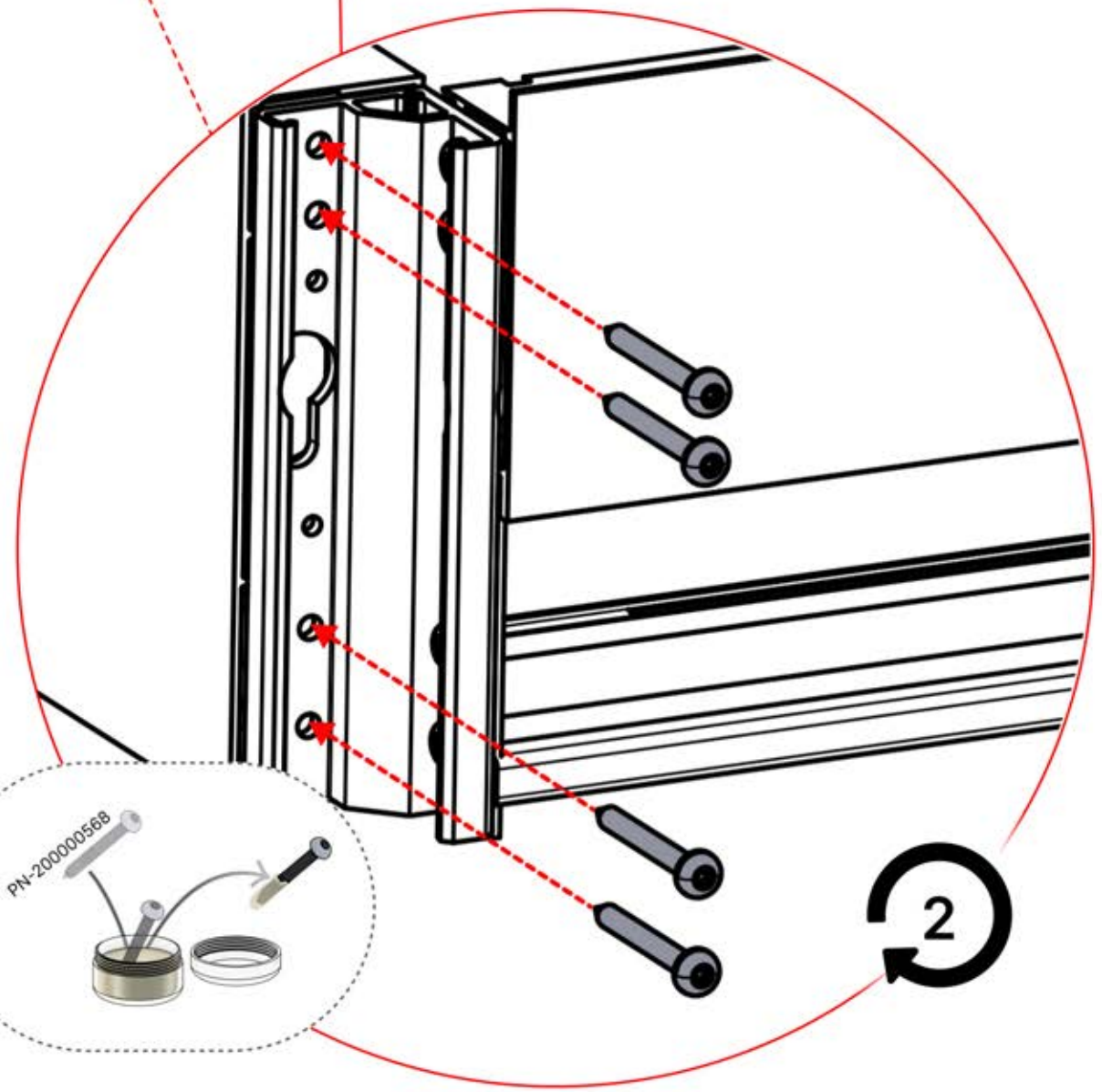

13



4

ANTHRACITE: B245
WHITE: B253
BLACK: B249



PN-200000507

2x

PN-20000
3365 Zip Bag

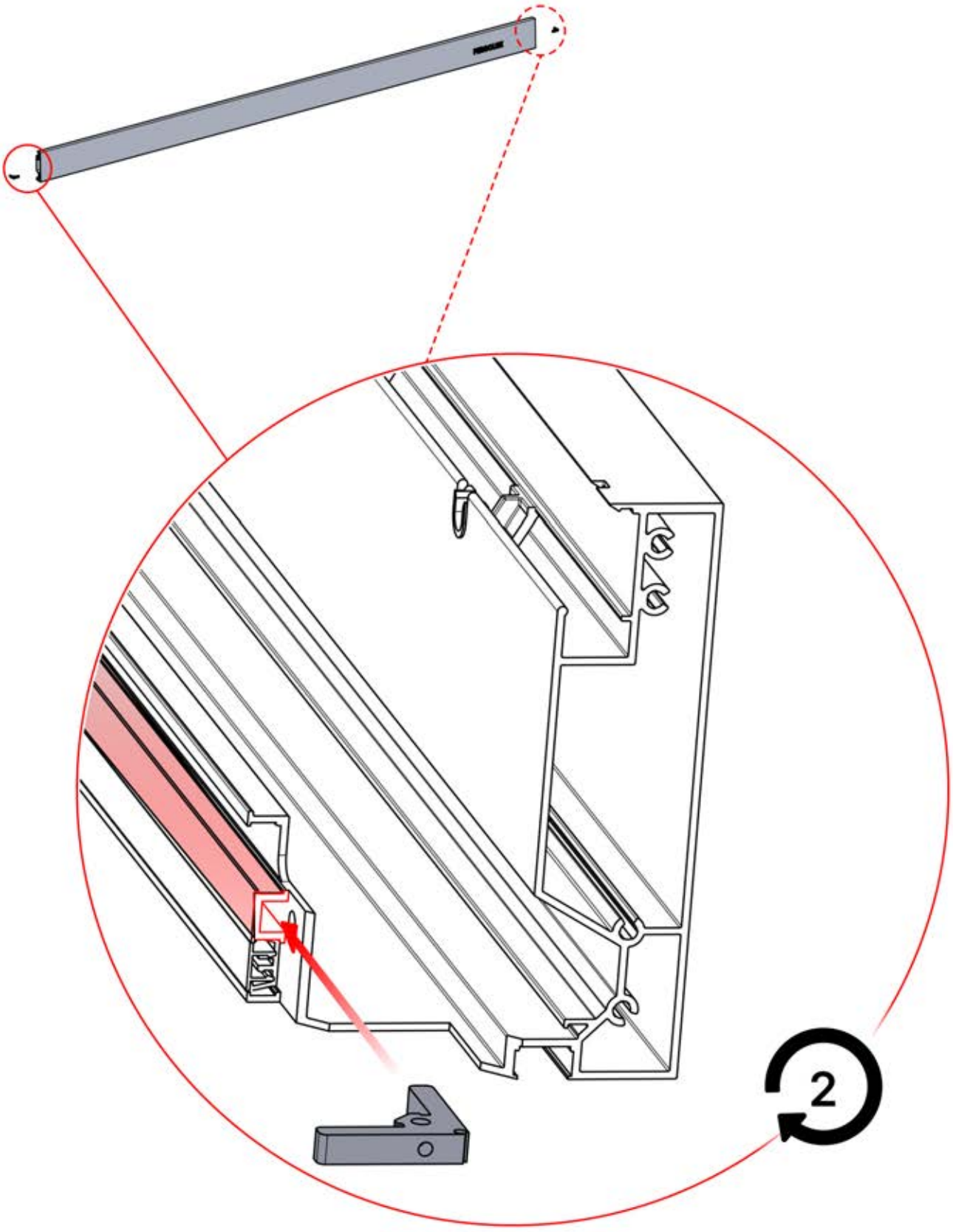

14



4

ANTHRACITE: B245
WHITE: B253
BLACK: B249



PN-200000507

2x

PN-20000
3365 Zip Bag

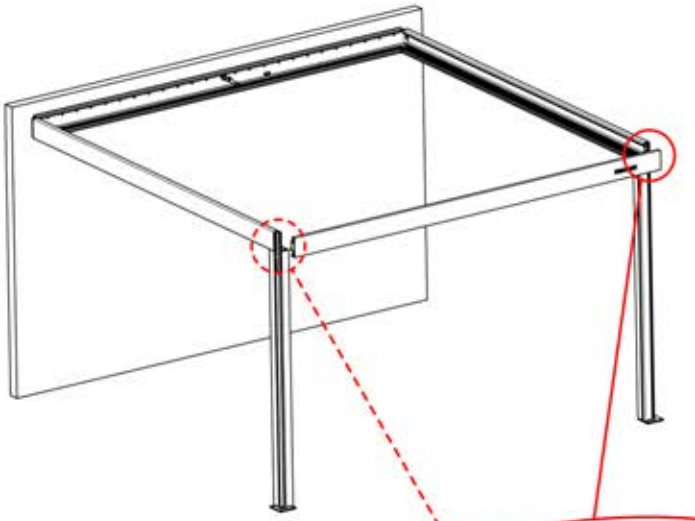

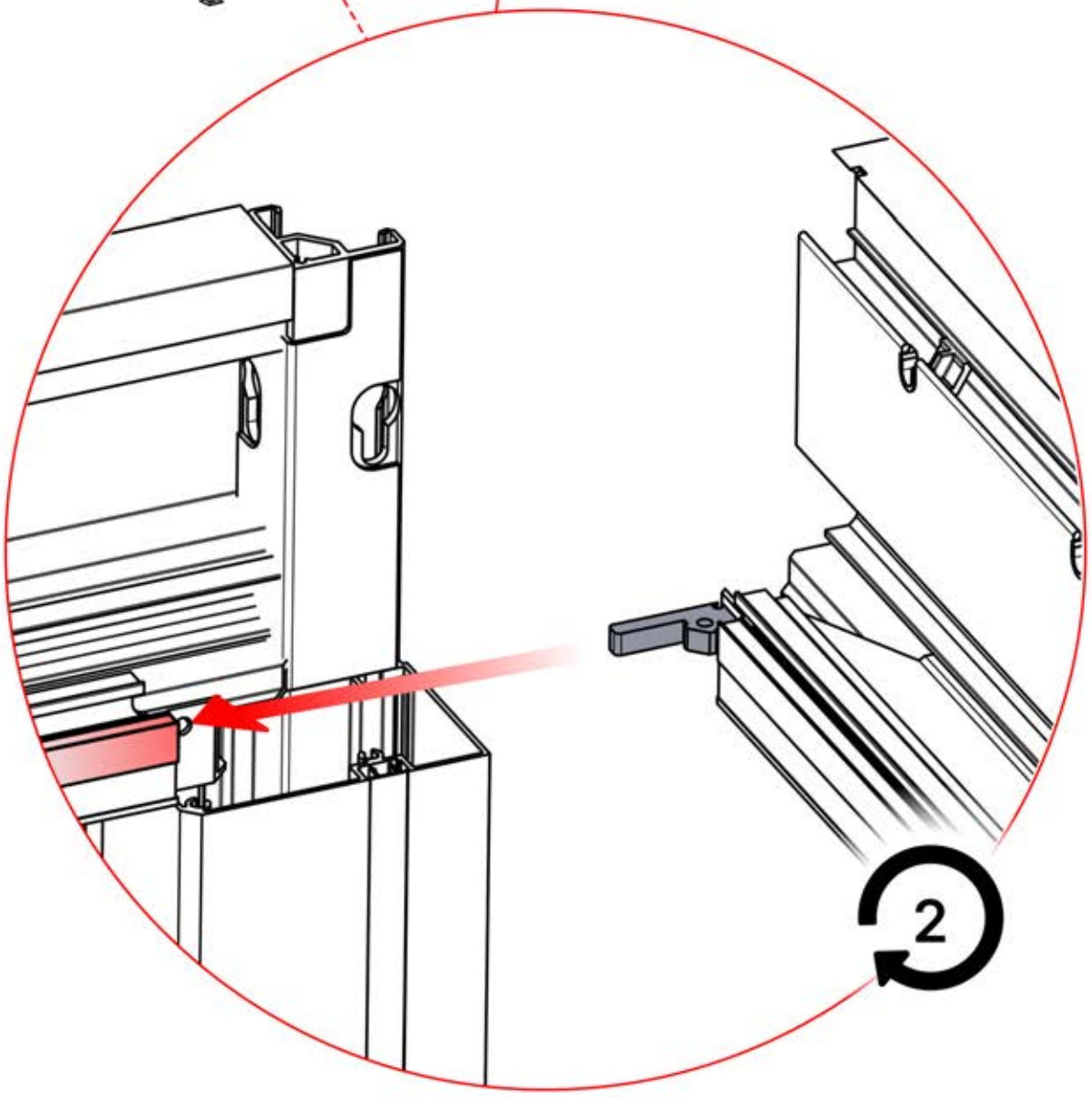

15

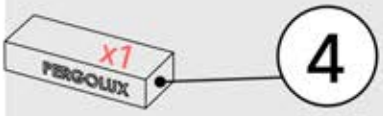

ANTHRACITE: B245
WHITE: B253
BLACK: B249



PN-200000568

8x

PN-20000
3279
Zip Bag

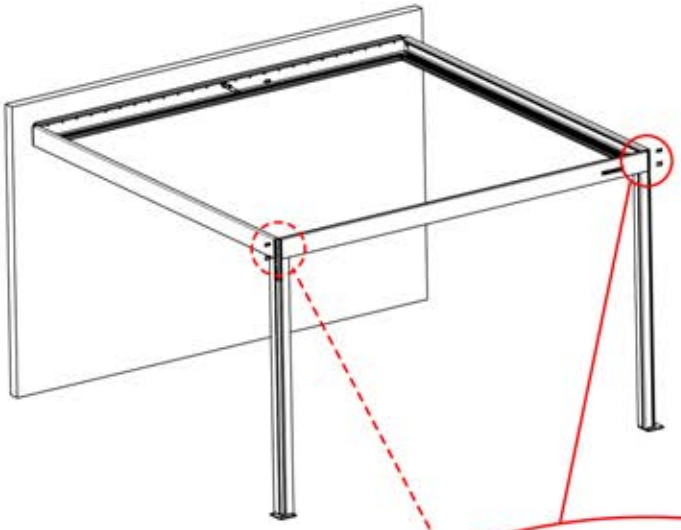

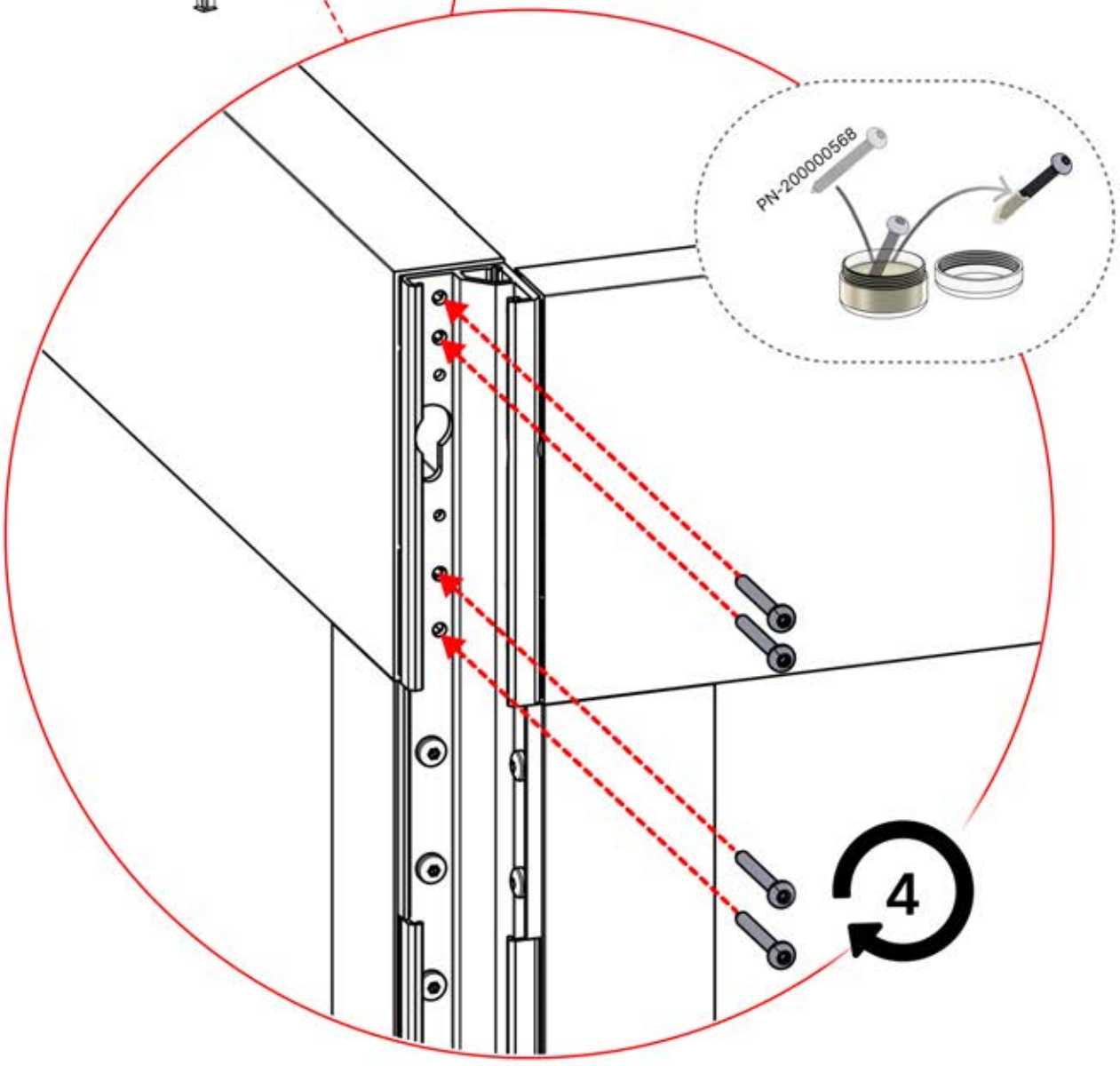

16

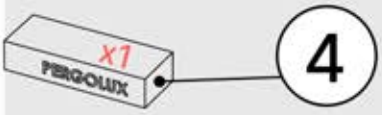

ANTHRACITE: B245
WHITE: B253
BLACK: B249



PN-200000569

8x

PN-20000
3365 Zip Bag

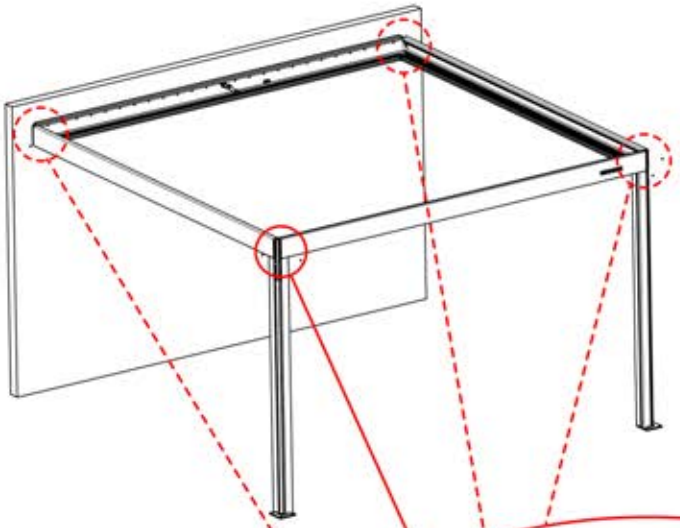

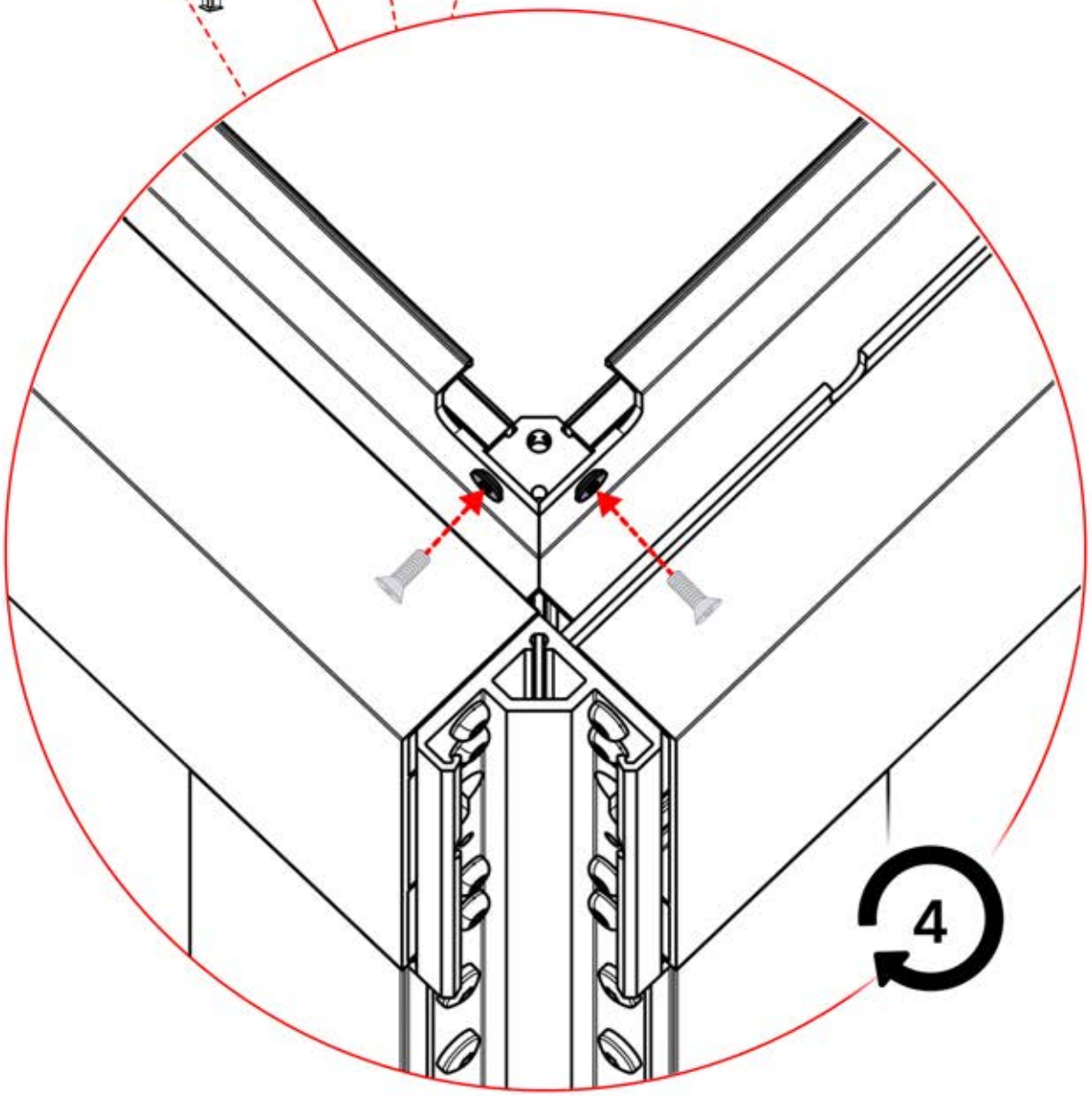

17

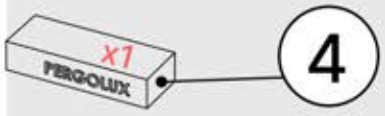

4

ANTHRACITE: B245
WHITE: B253
BLACK: B249



PN-200000568

2x

PN-20000
3365
Zip Bag

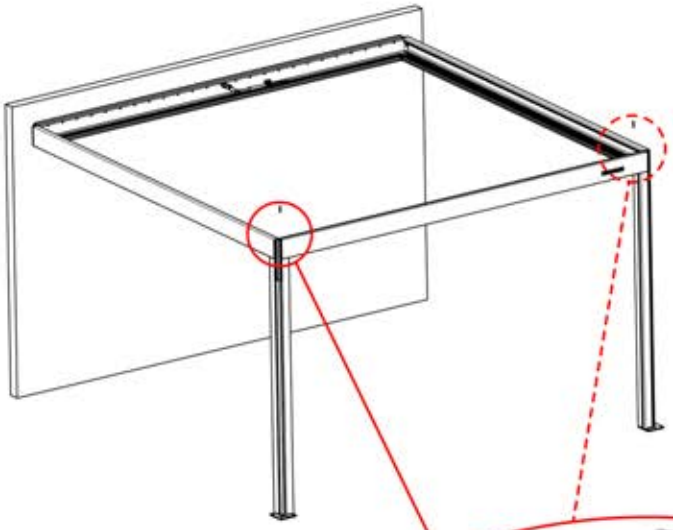

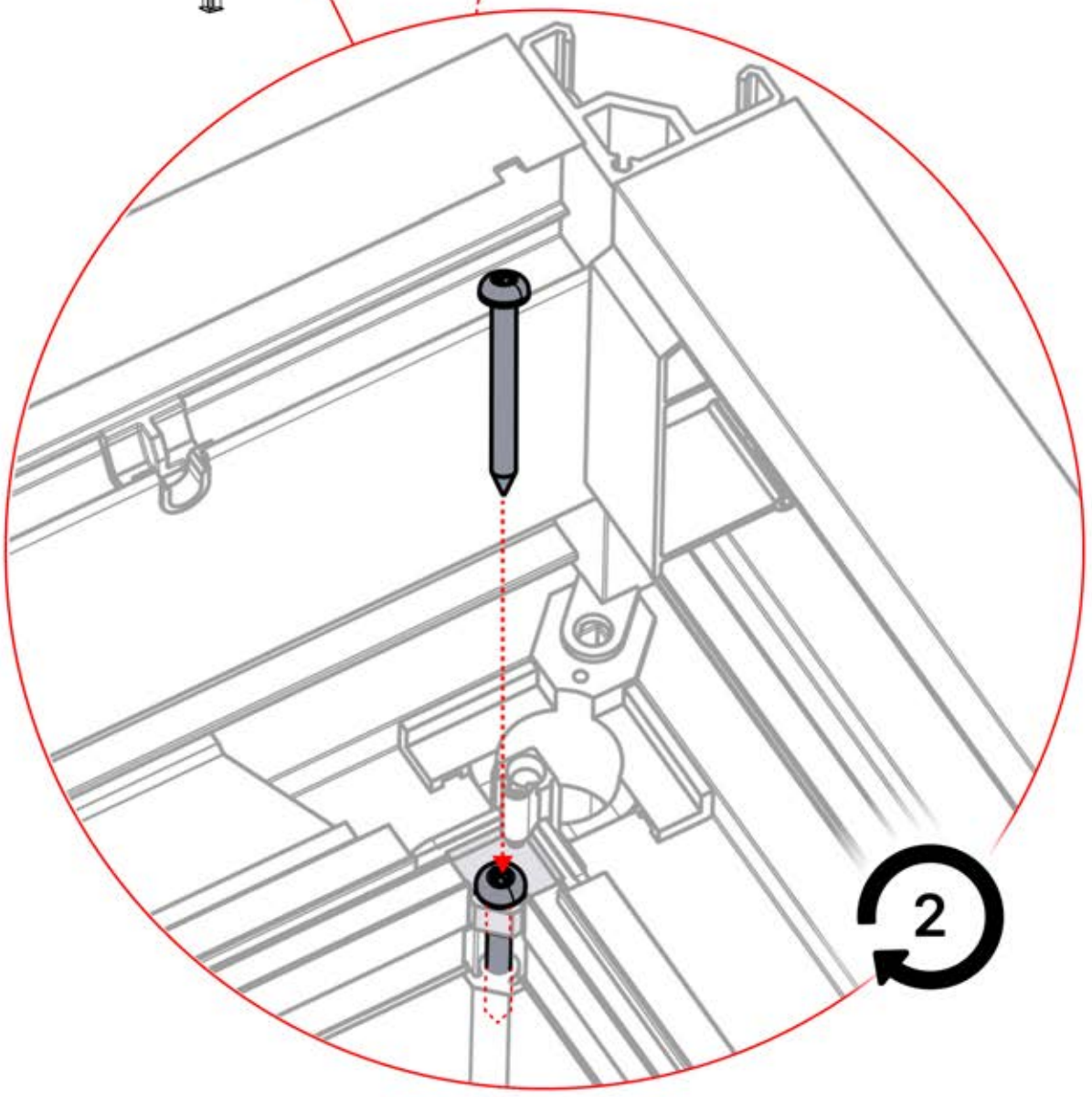

18

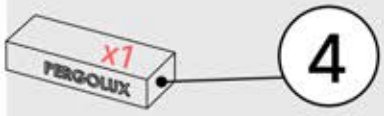

ANTHRACITE: B245
WHITE: B253
BLACK: B249

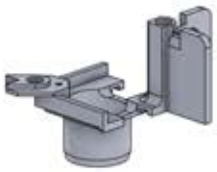

PN-200002617

2x

PN-20000 3364 Zip Bag

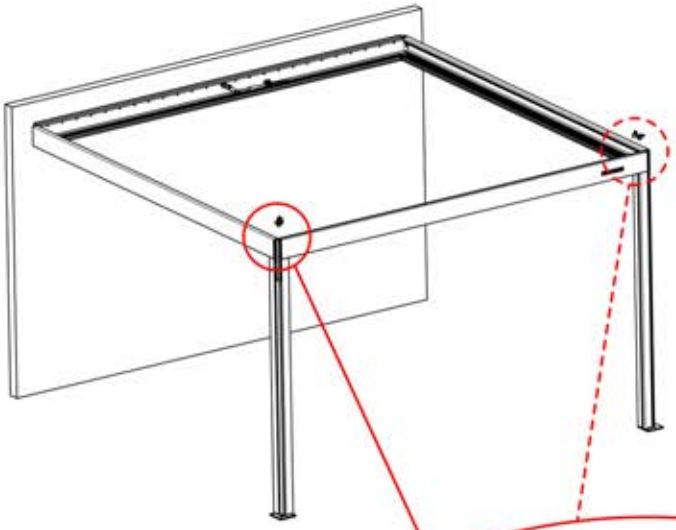

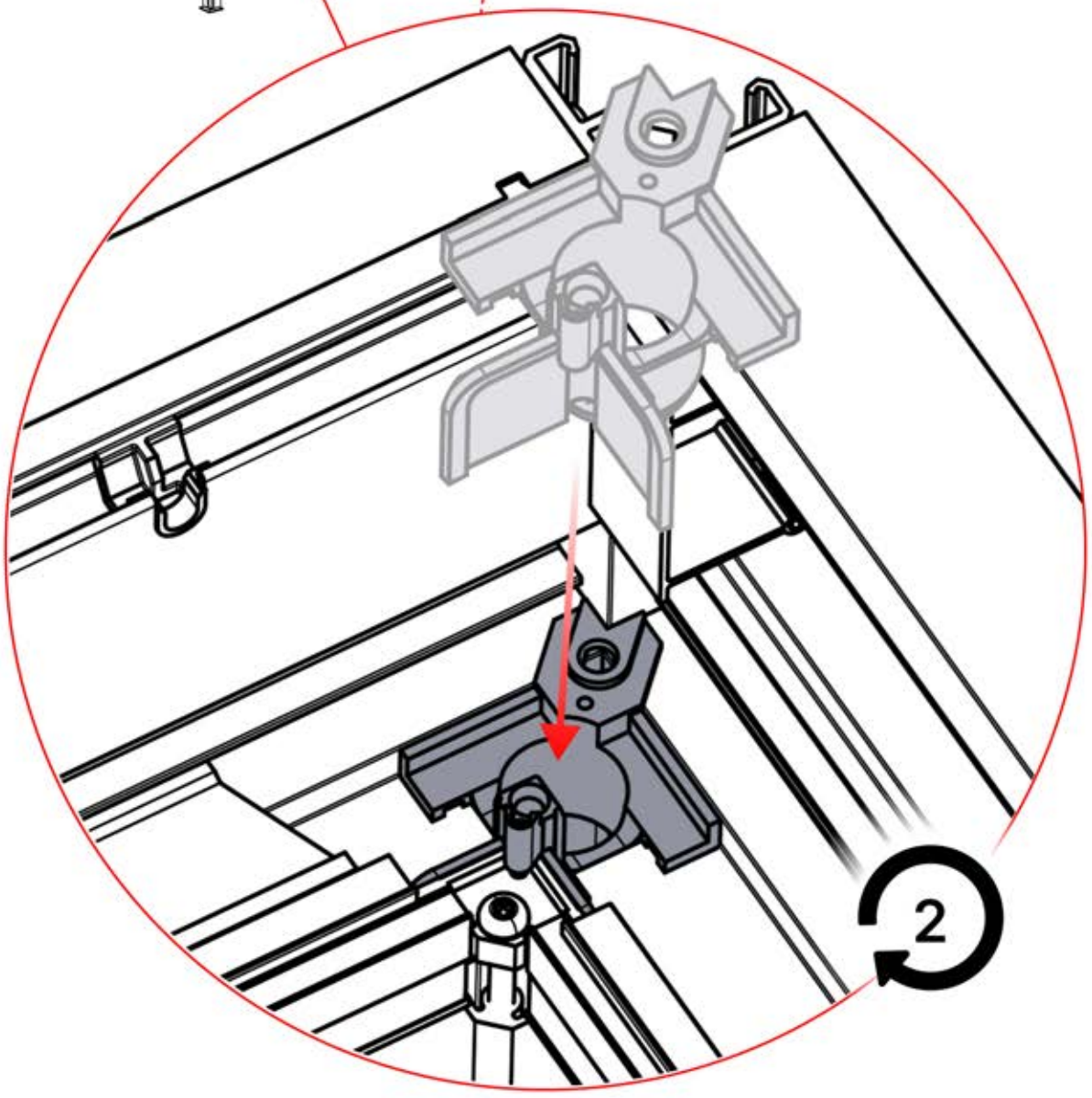

19

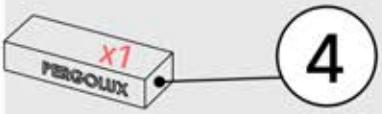

ANTHRACITE: B245
WHITE: B253
BLACK: B249



PN-200002618
2x



PN-200000571
2x

PN-20000
3276
Zip Bag

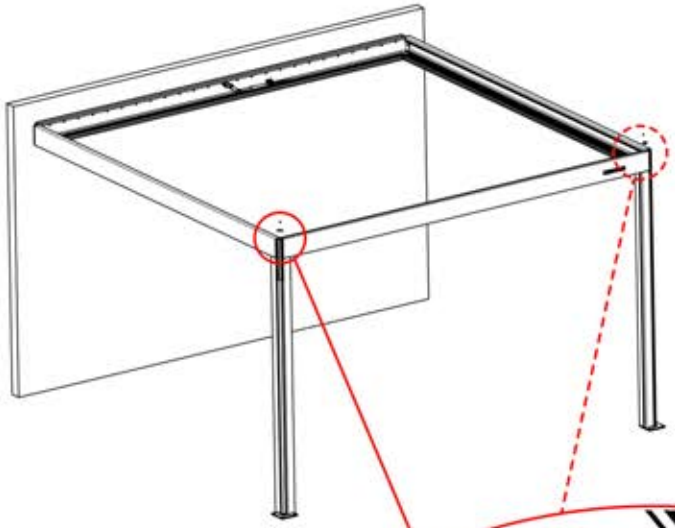

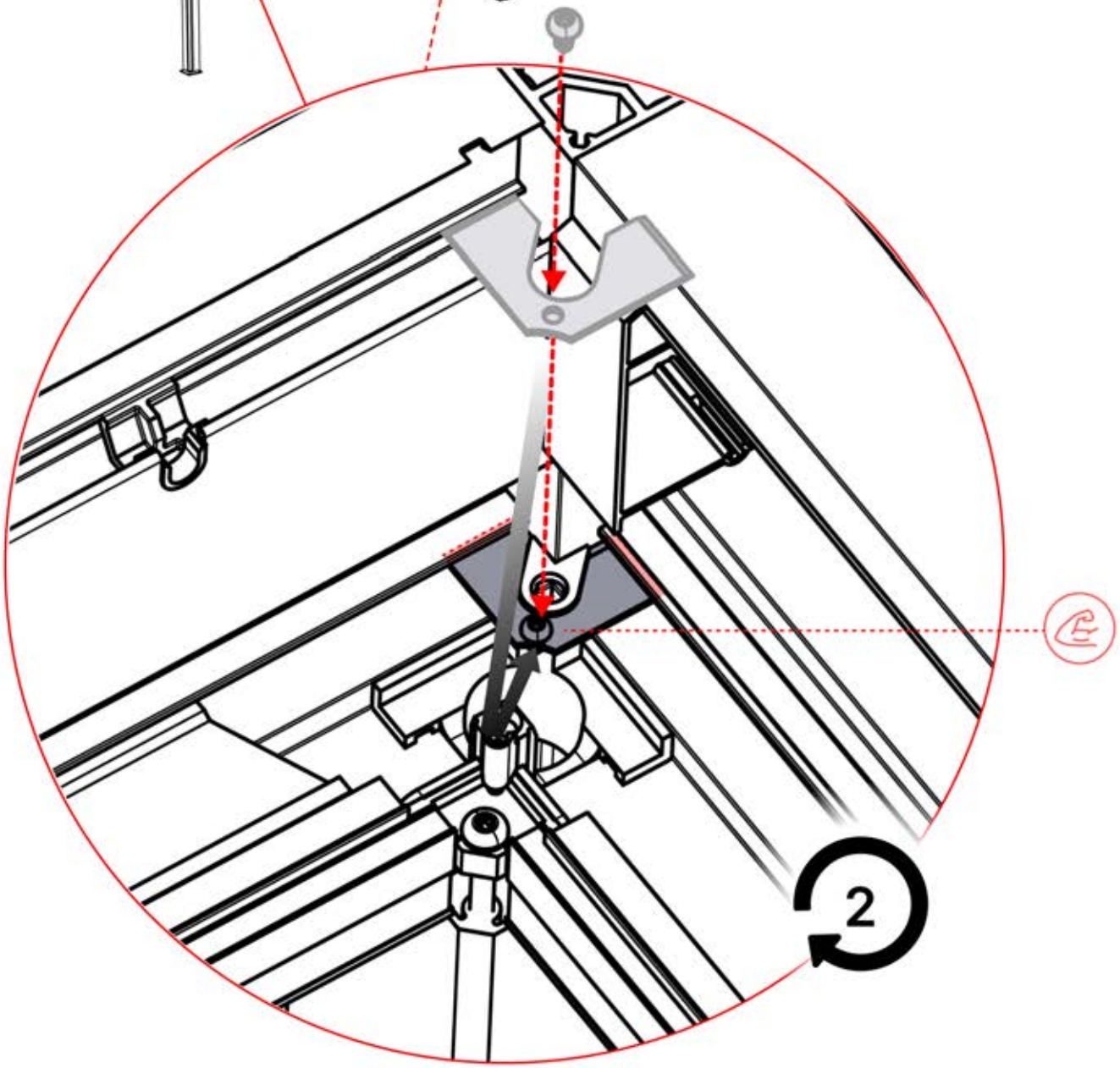

20

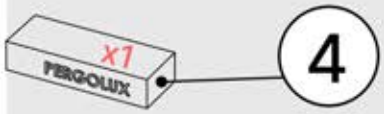

4

ANTHRACITE: B245
WHITE: B253
BLACK: B249

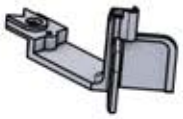

PN-200002792

2x

PN-20000
3364
Zip Bag

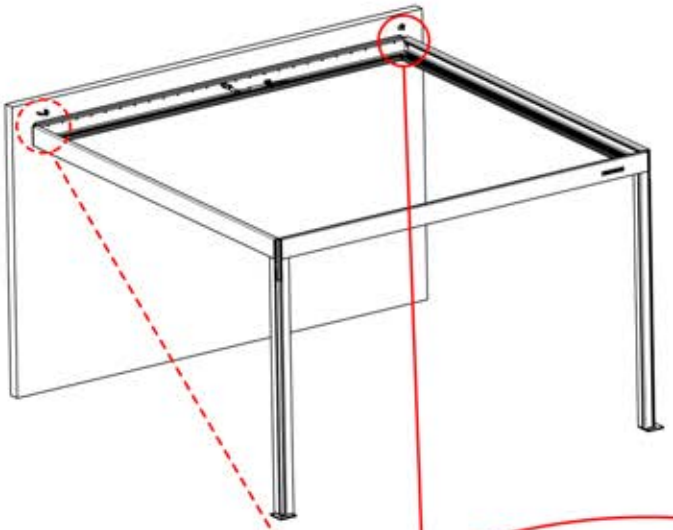

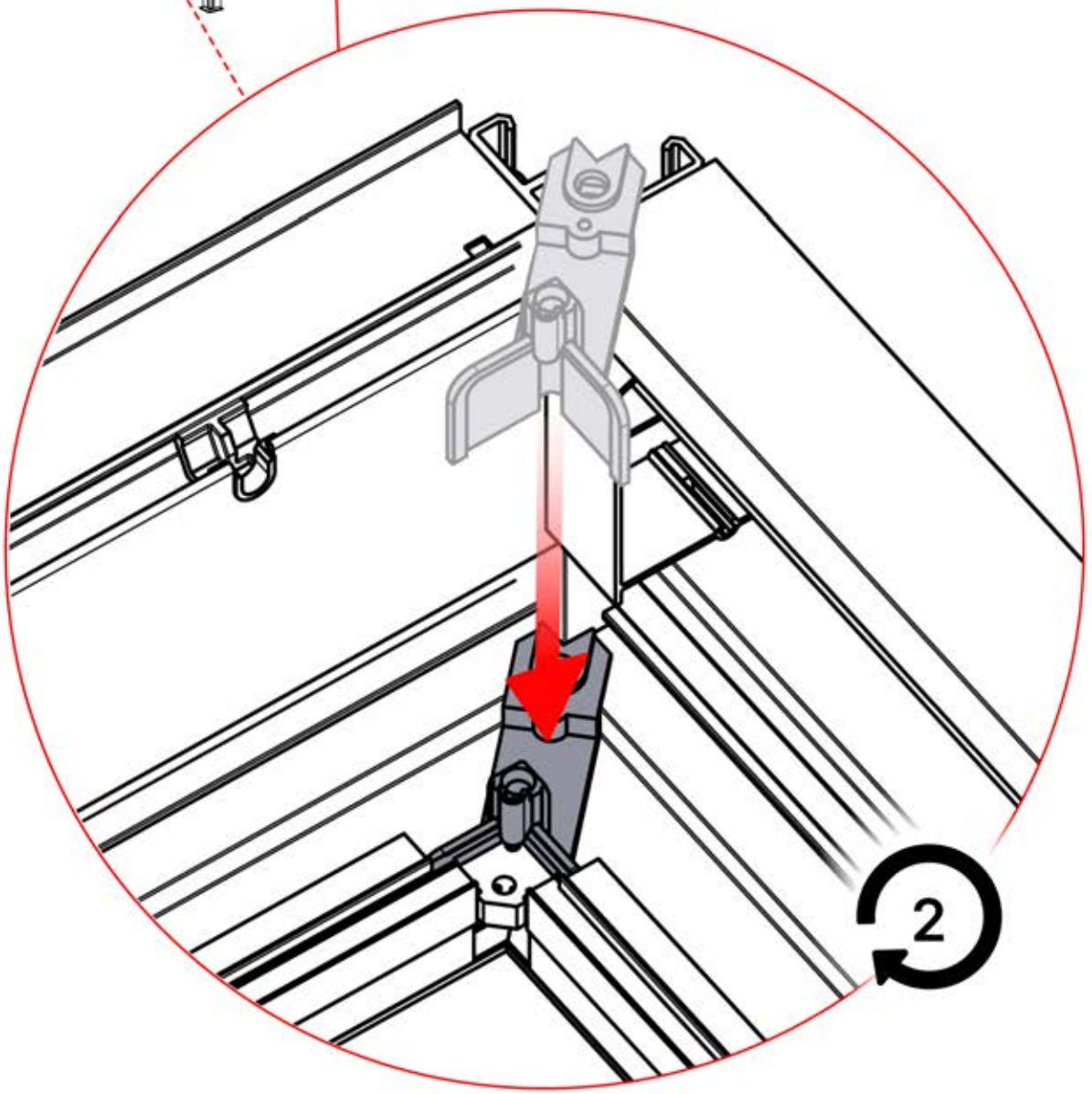

21

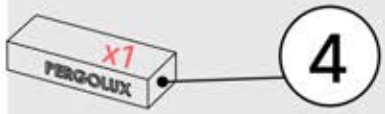

ANTHRACITE: B245
WHITE: B253
BLACK: B249



PN-200002618
2x



PN-200000571
2x

PN-20000
3276 Zip Bag

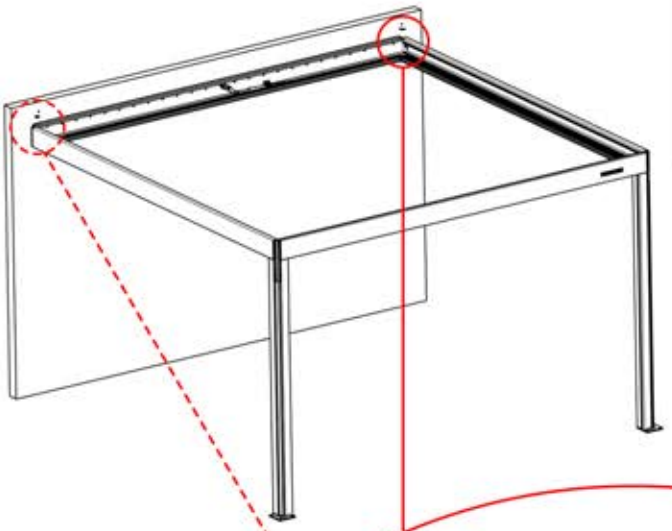

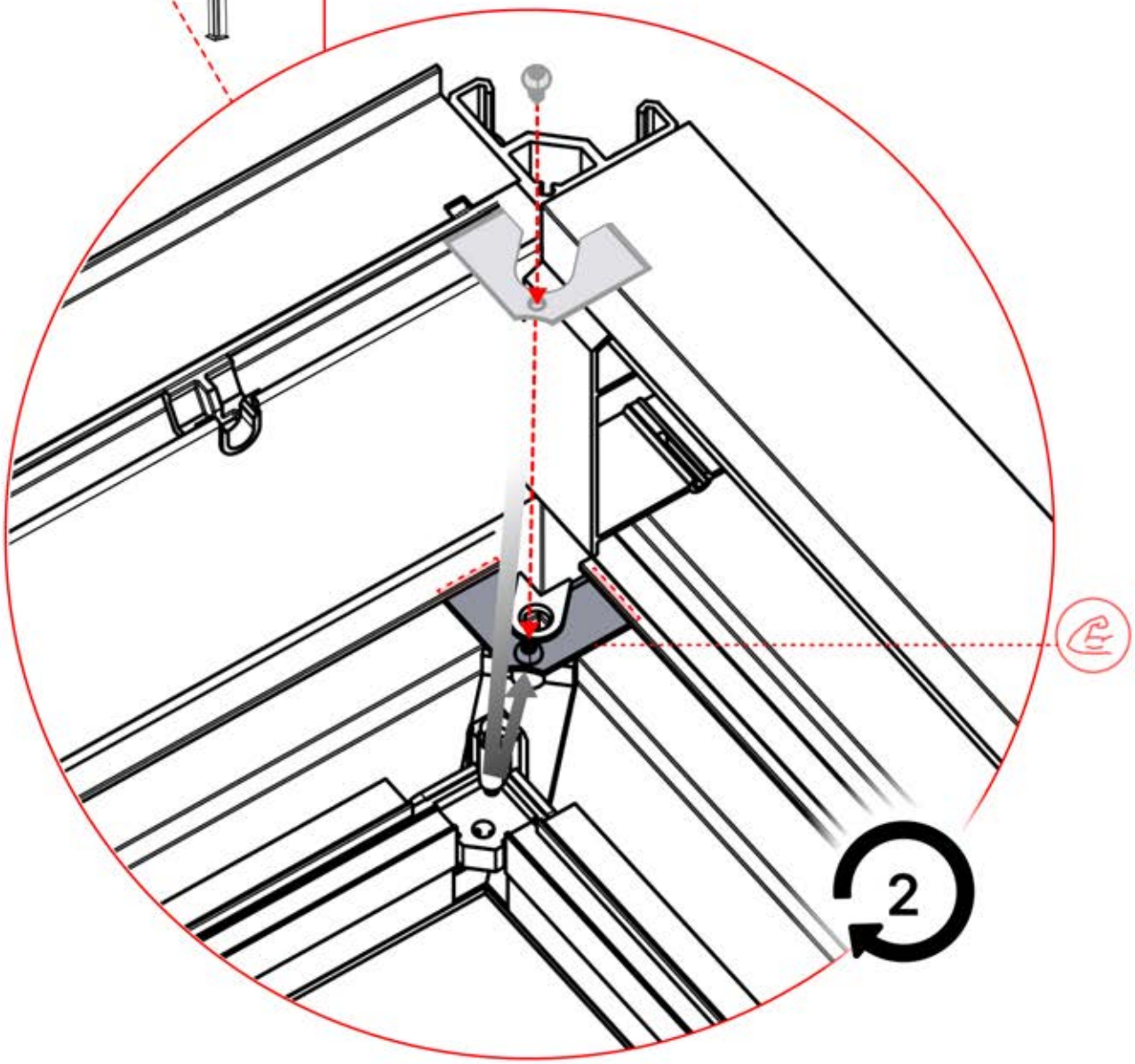

IMPORTANT INFORMATION

Handle with care.

When installing the light strip, do not pull or bend the wires on both sides with force, as this may cause the solder joints to fall off.

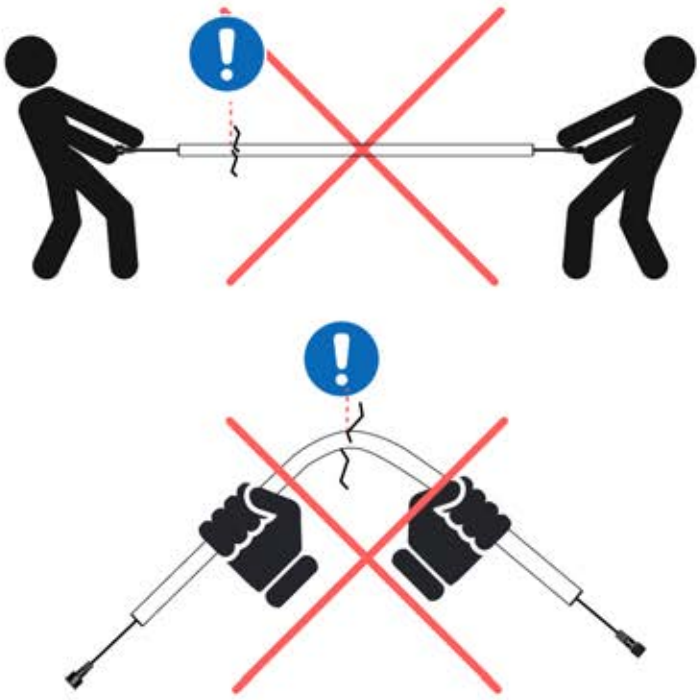

Important! Please watch all the videos before starting the assembly.

The videos contain important information relevant to the assembly process.



INFORMATION

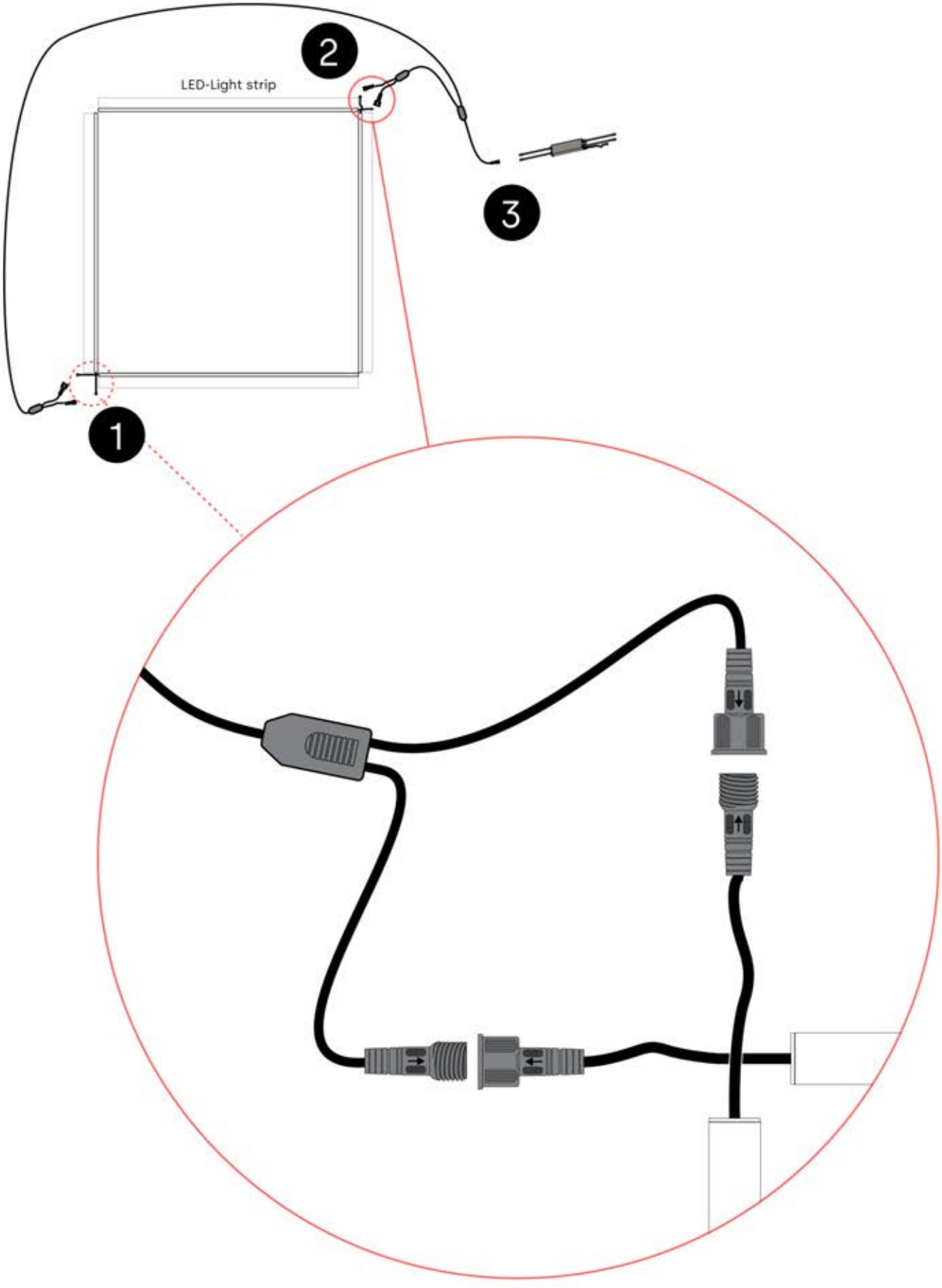

INFORMATION

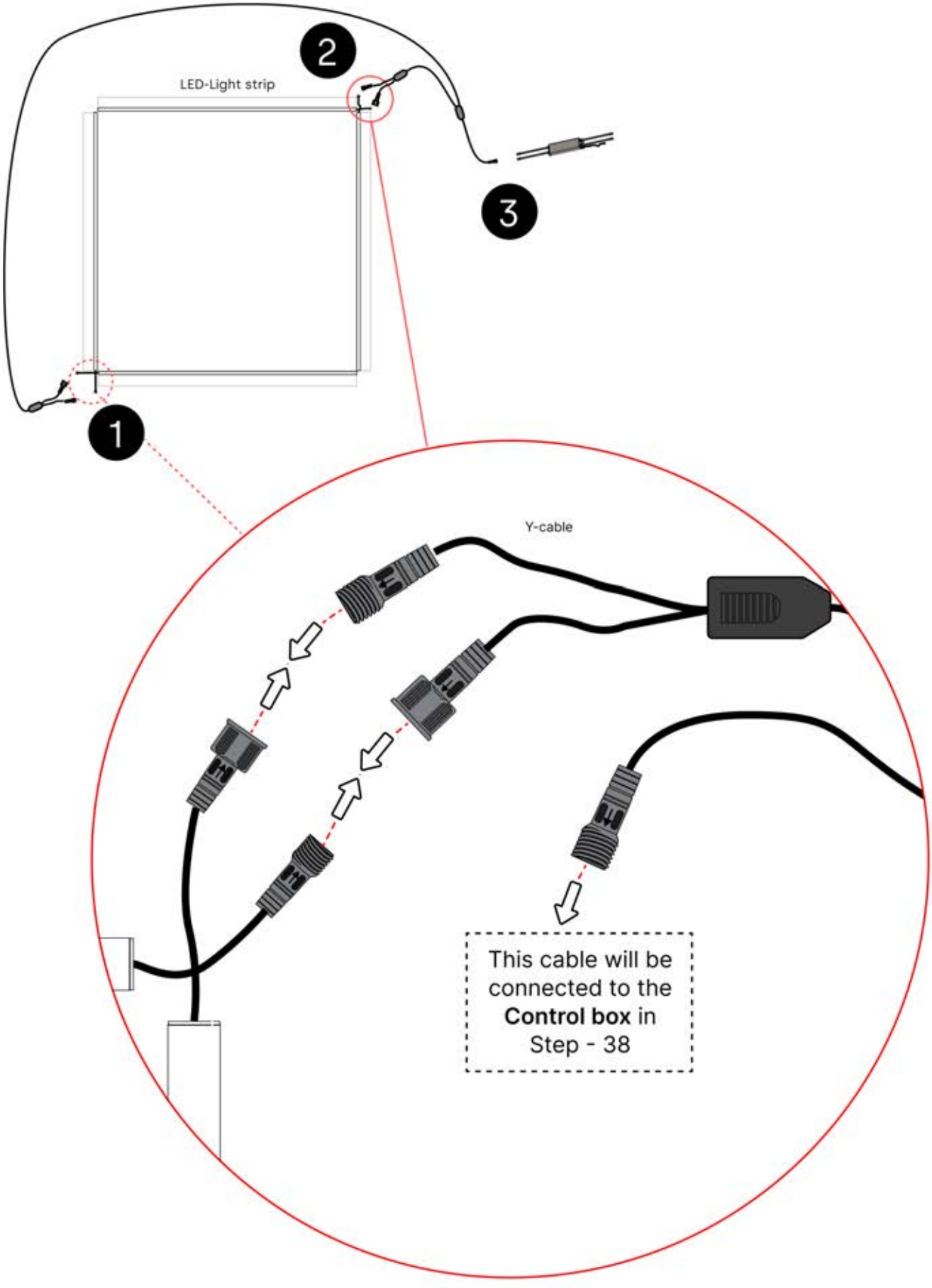

22

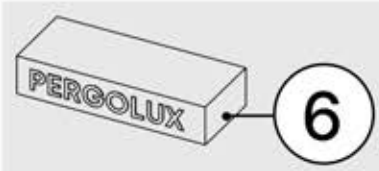

WHITE / RGB LED



LED strip

1x

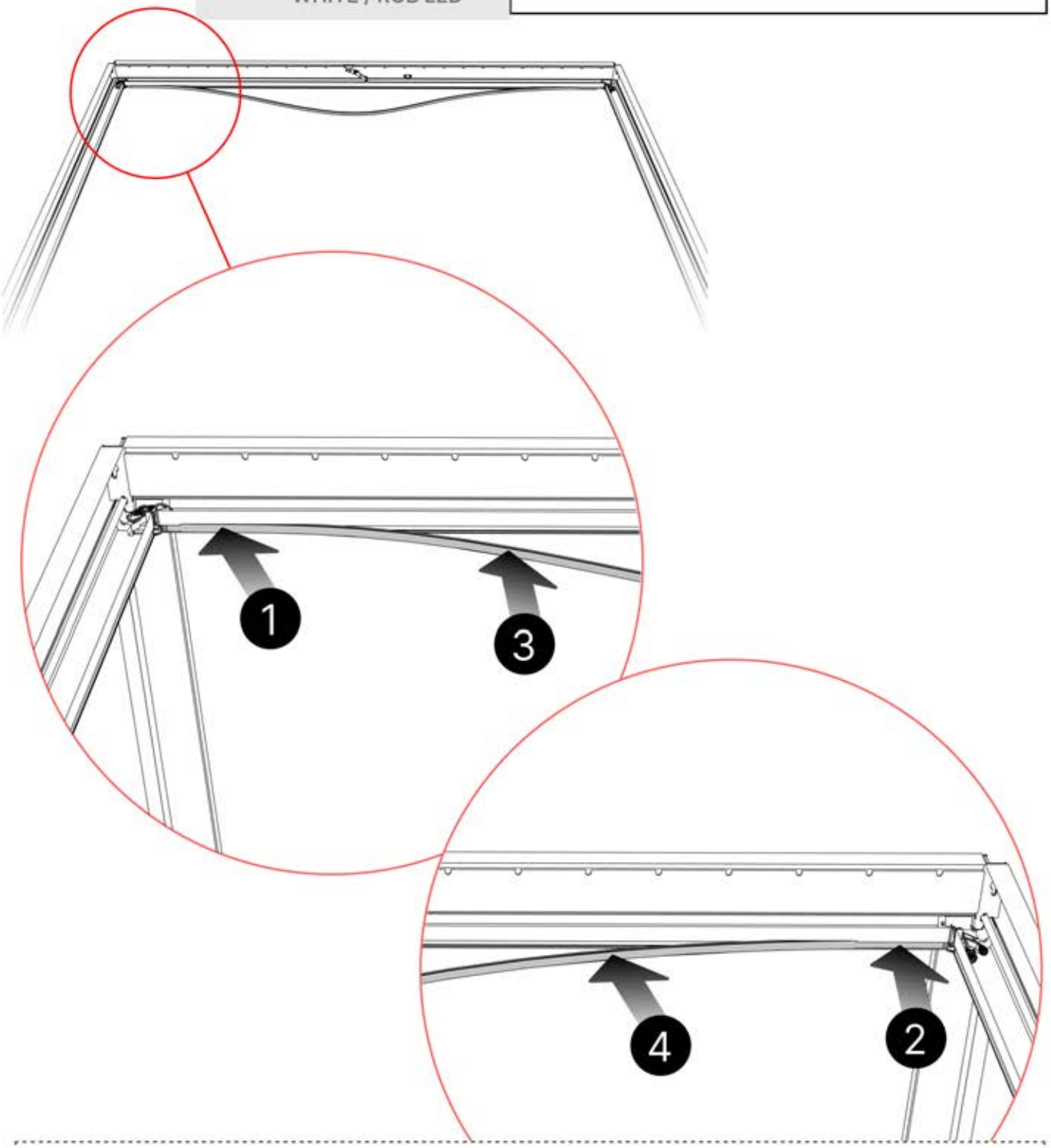

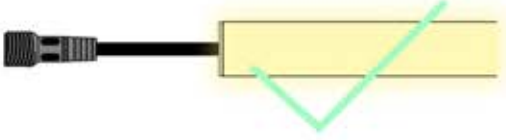

This side is the front and should face outward

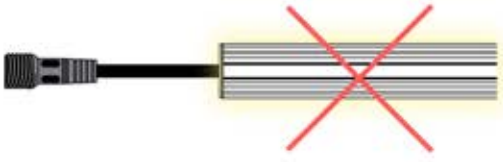

This side is the back and should be positioned to face the beam

23

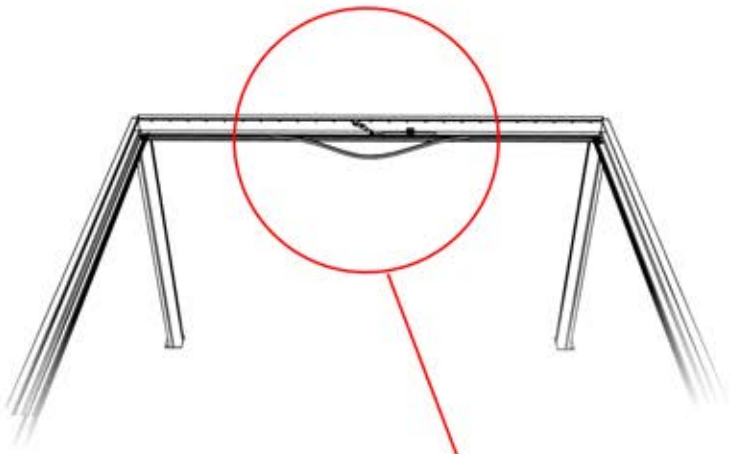

Tip: For a smoother LED installation, spray the track with soapy water before mounting.



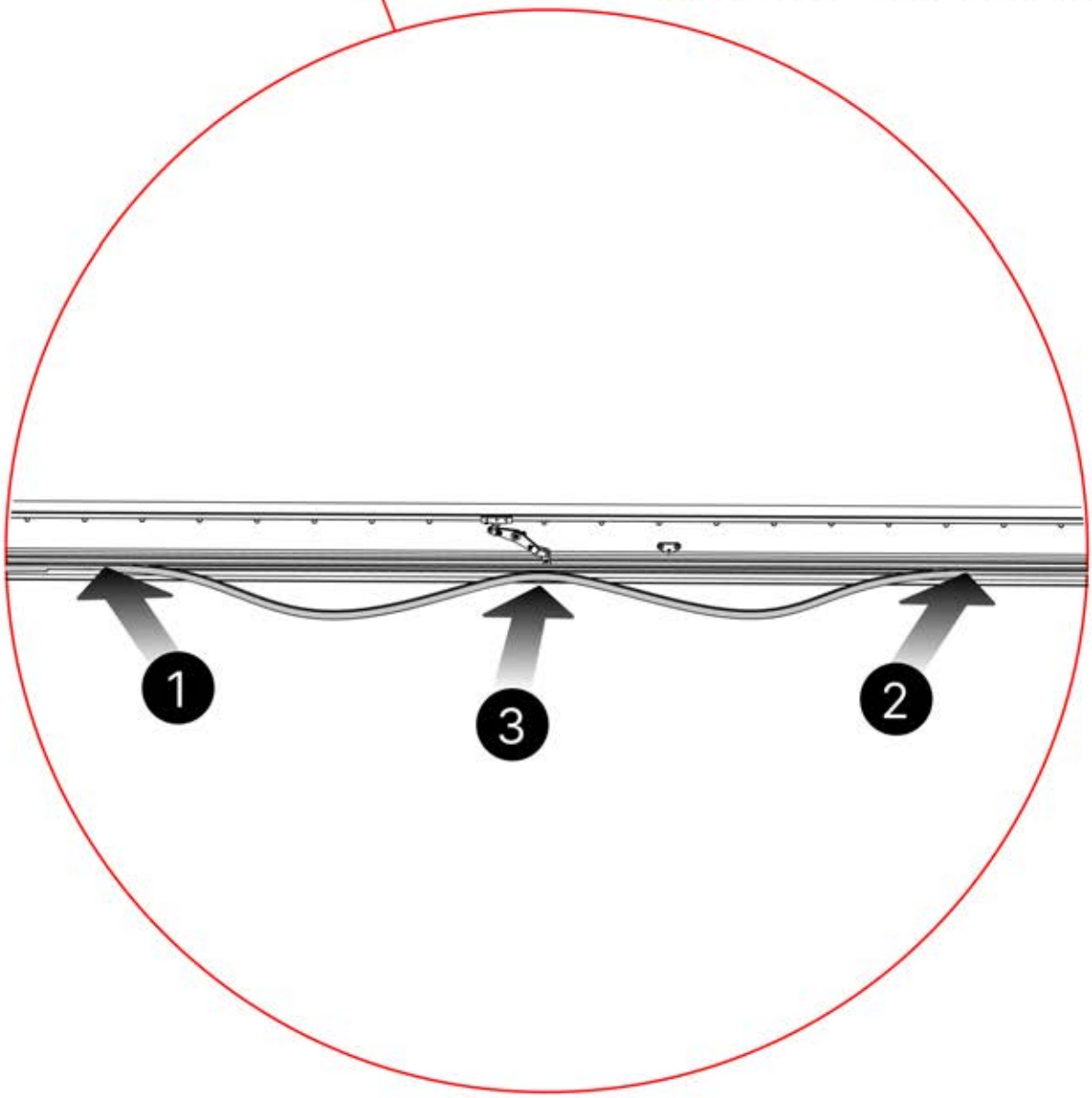

24

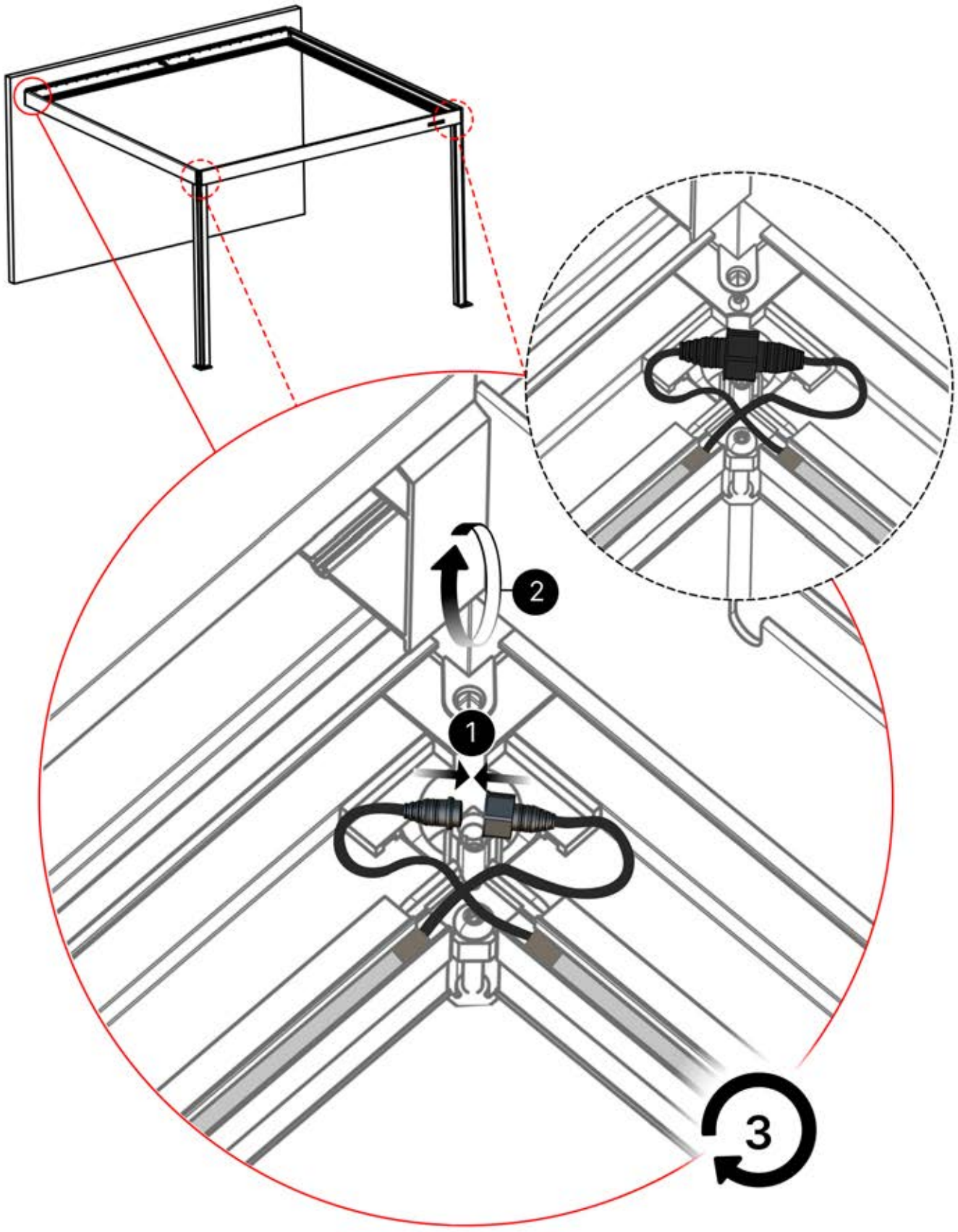

25

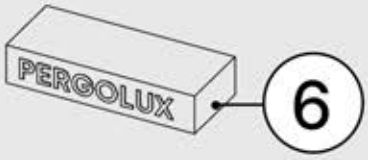

WHITE / RGB LED



Y - cable

1x

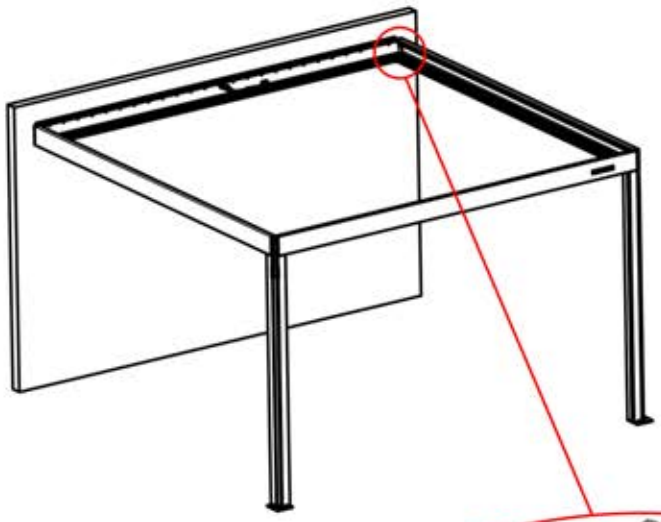

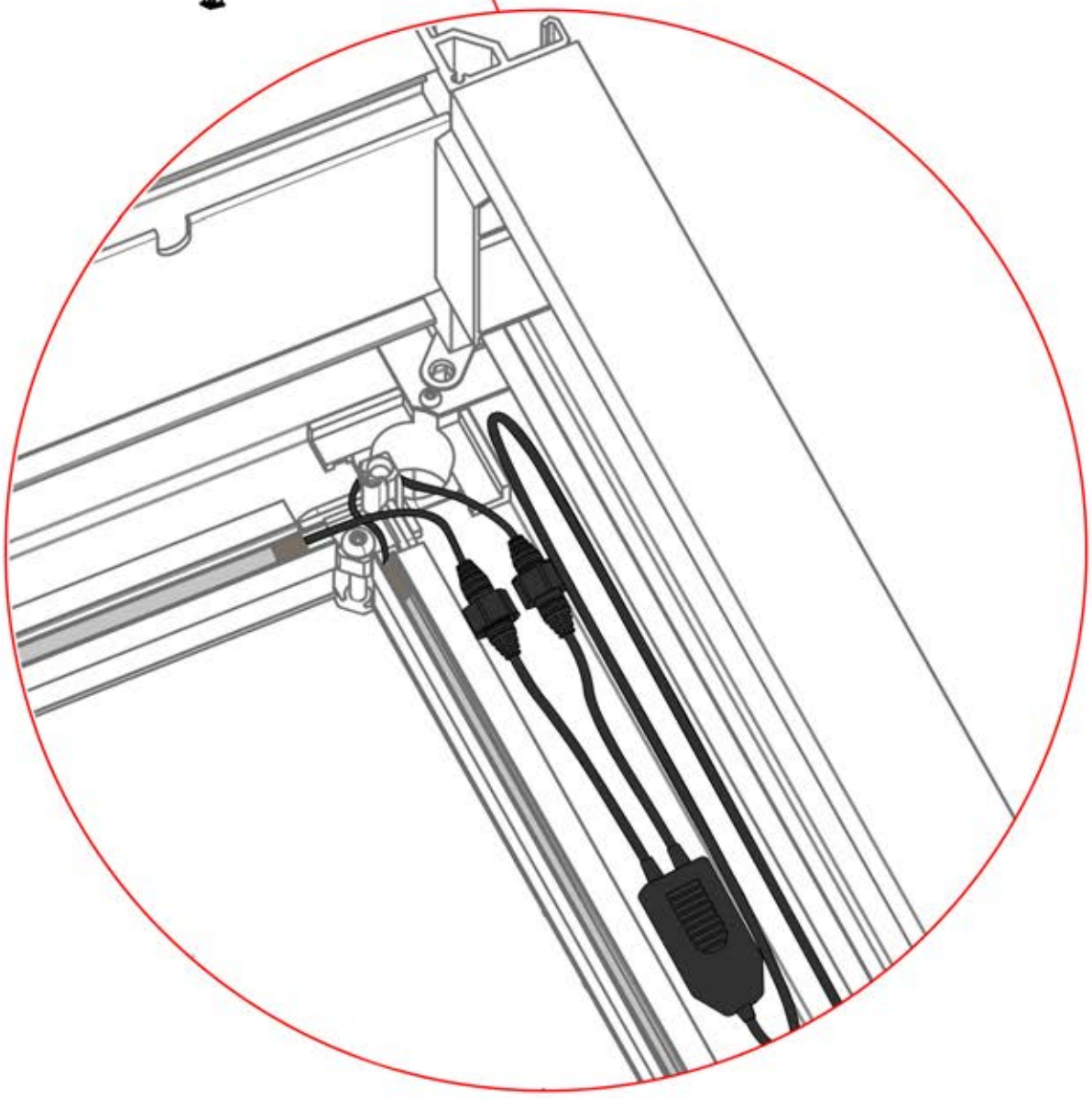

26

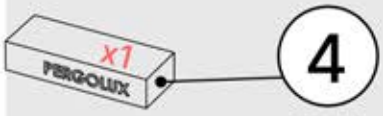

ANTHRACITE: B245
WHITE: B253
BLACK: B249



PN-200000516
2x

PN-20000
3365 Zip Bag

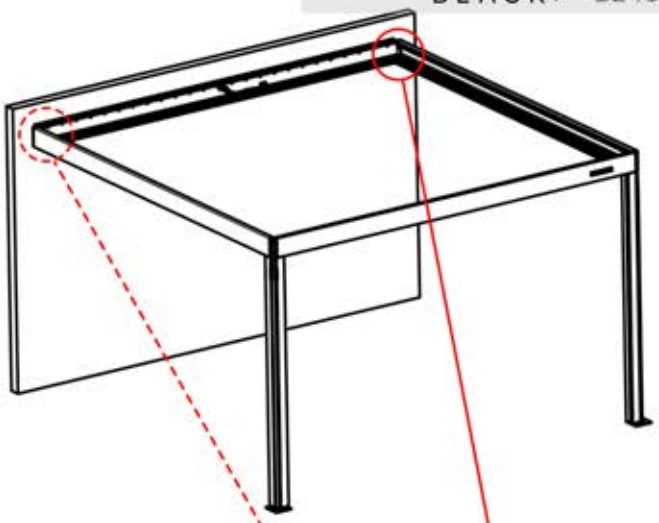

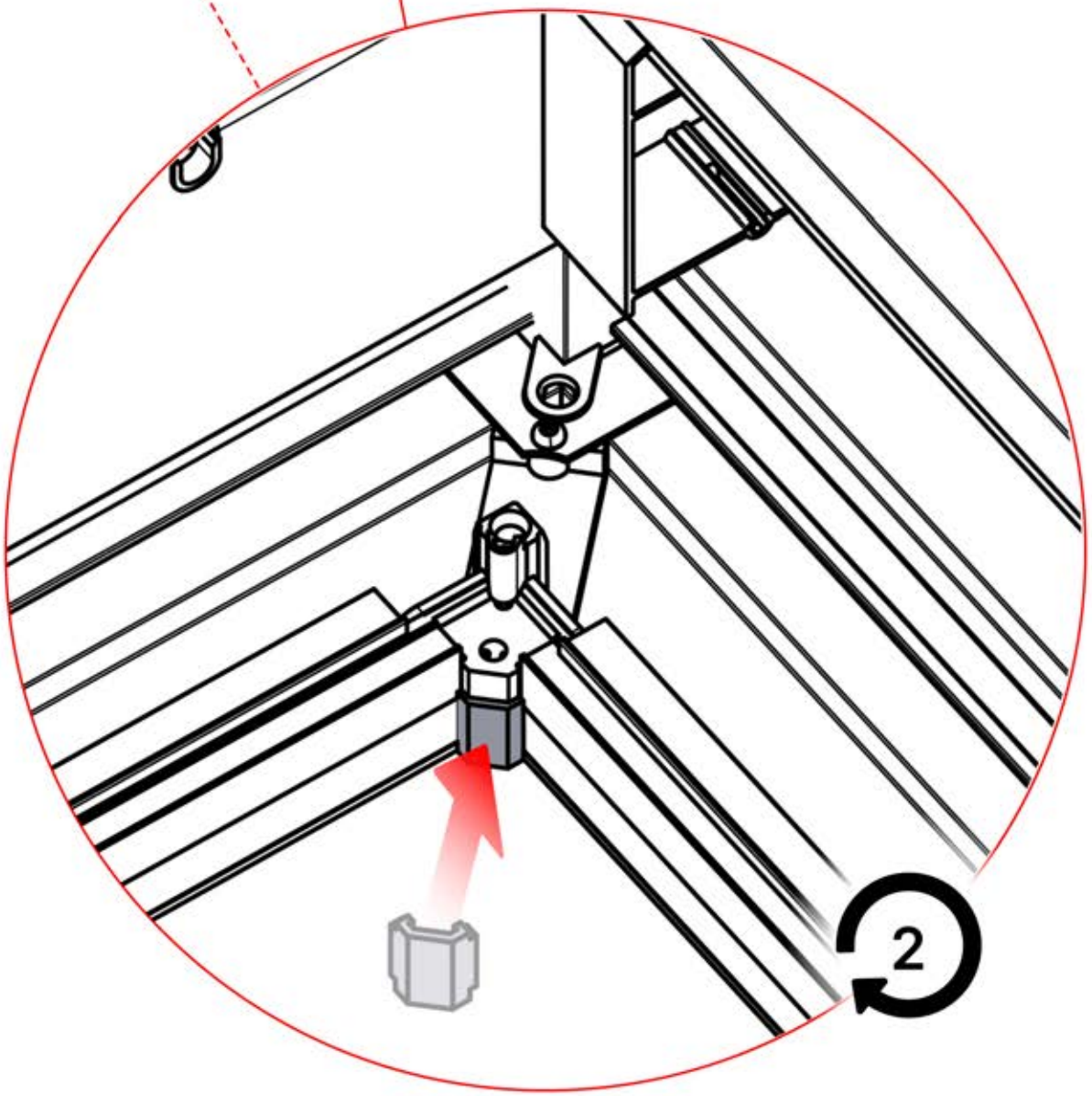

27



4

ANTHRACITE: B245
WHITE: B253
BLACK: B249



PN-200002625

4x

PN-20000 3284 Zip Bag



PN-200000960

4x

PN-20000 3379 Zip Bag

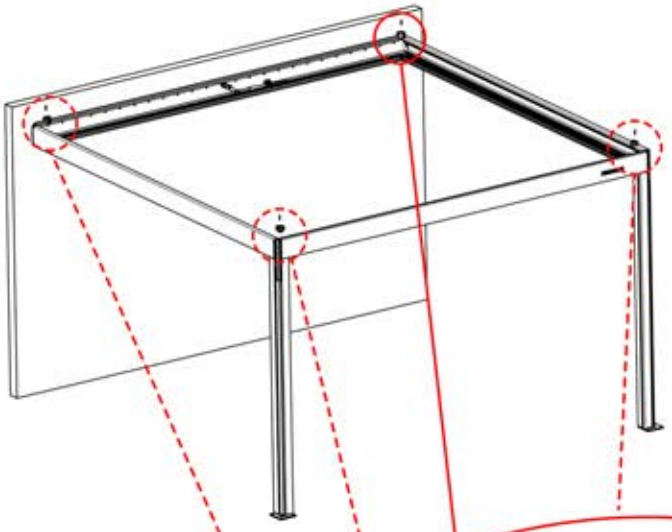

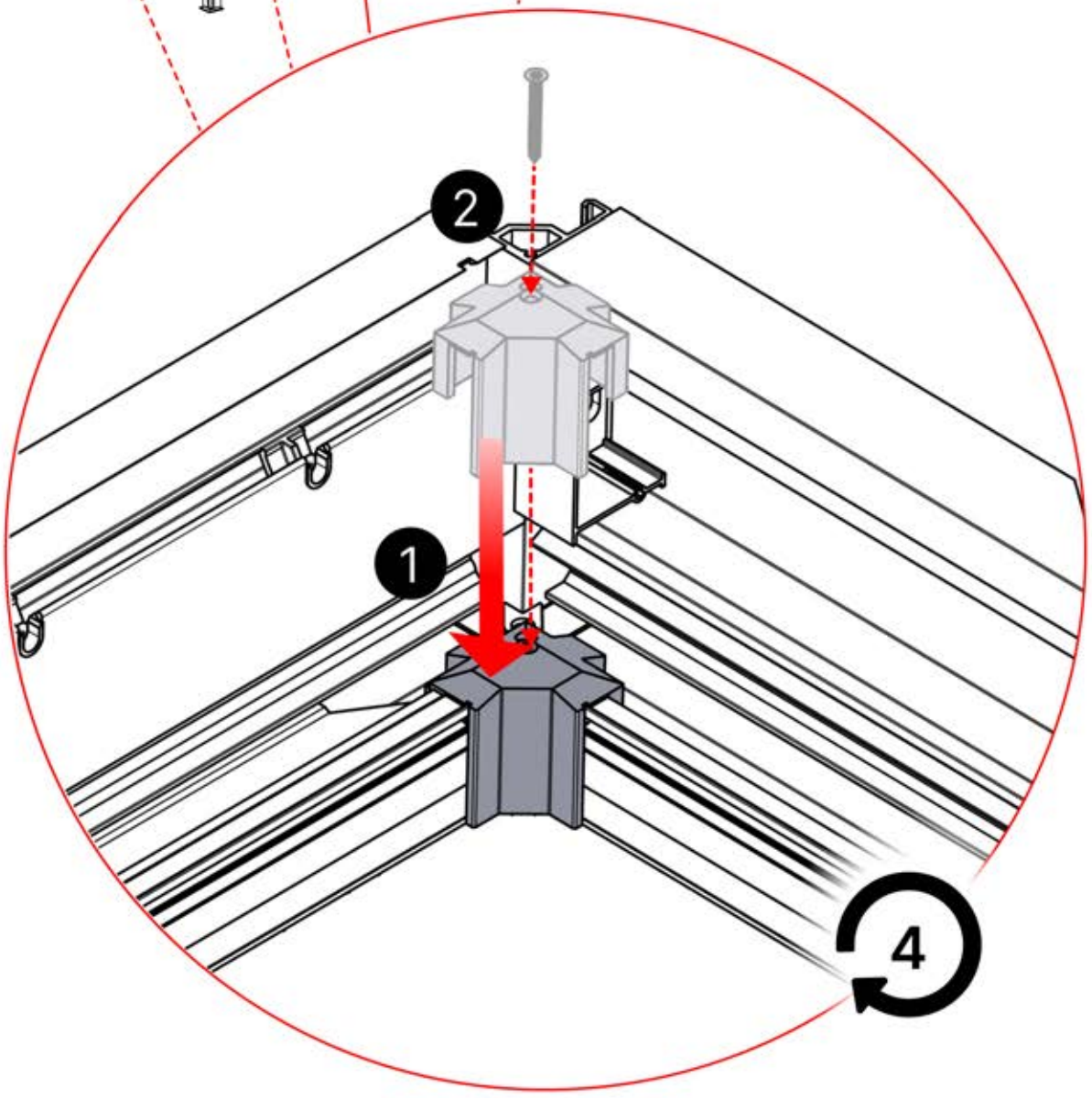

28

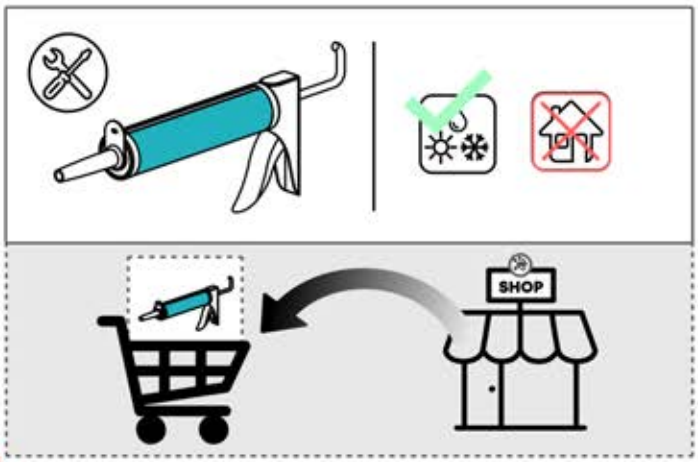
SHOP

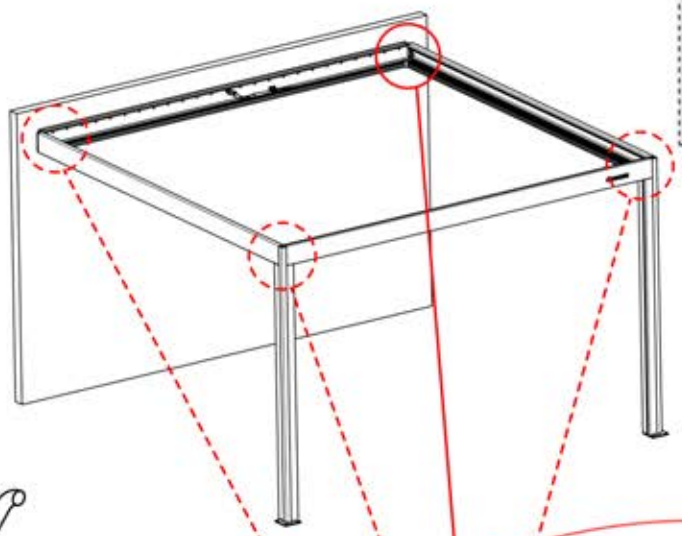

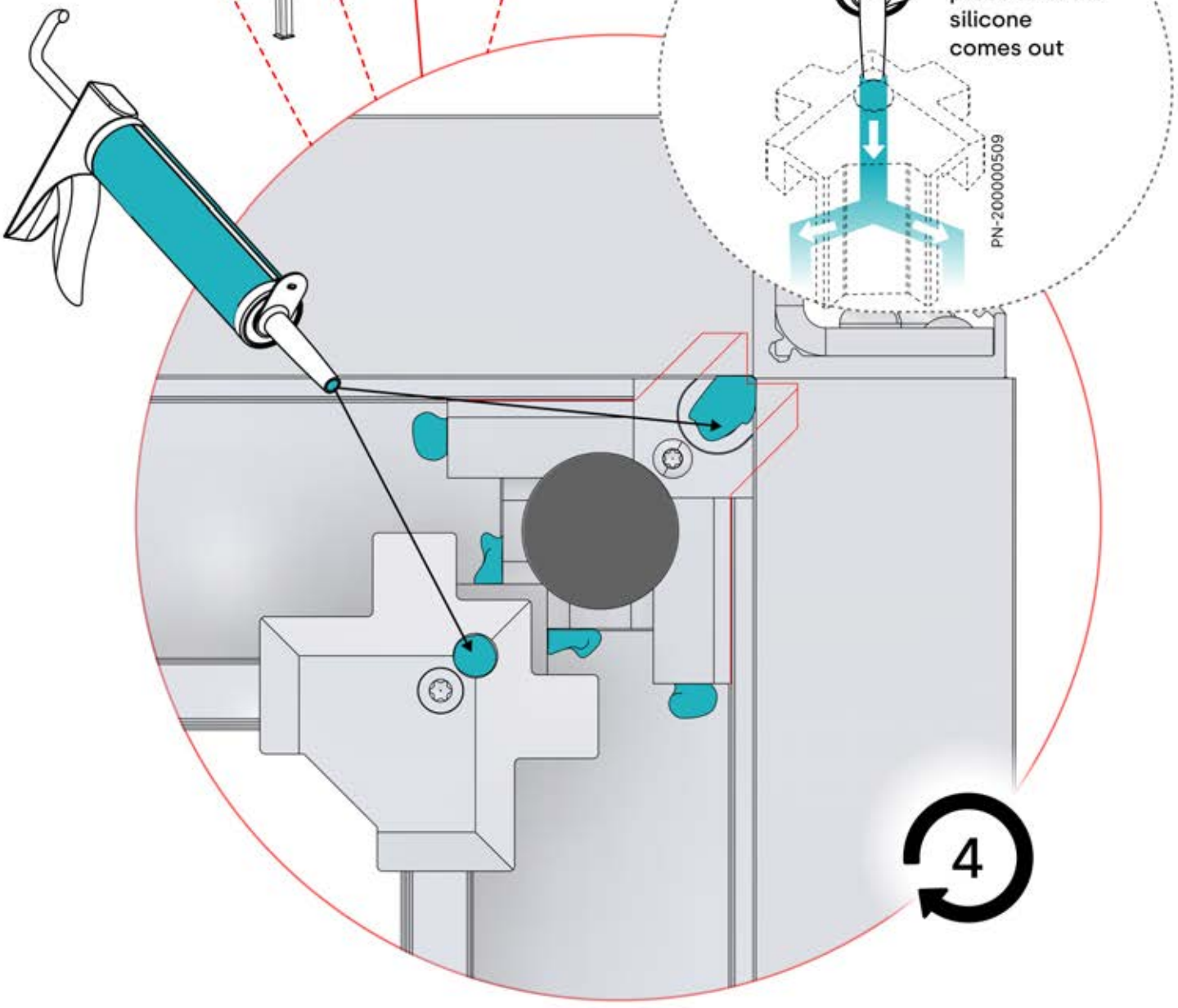
Use enough silicone and press until the silicone comes out
PN-200000509
4

29

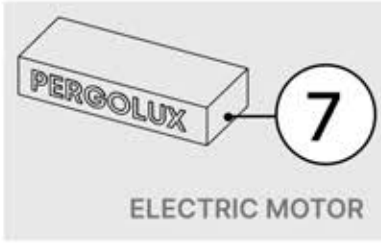

ELECTRIC MOTOR



Electric motor
PN-200001562
1x



PN-200001623

1x

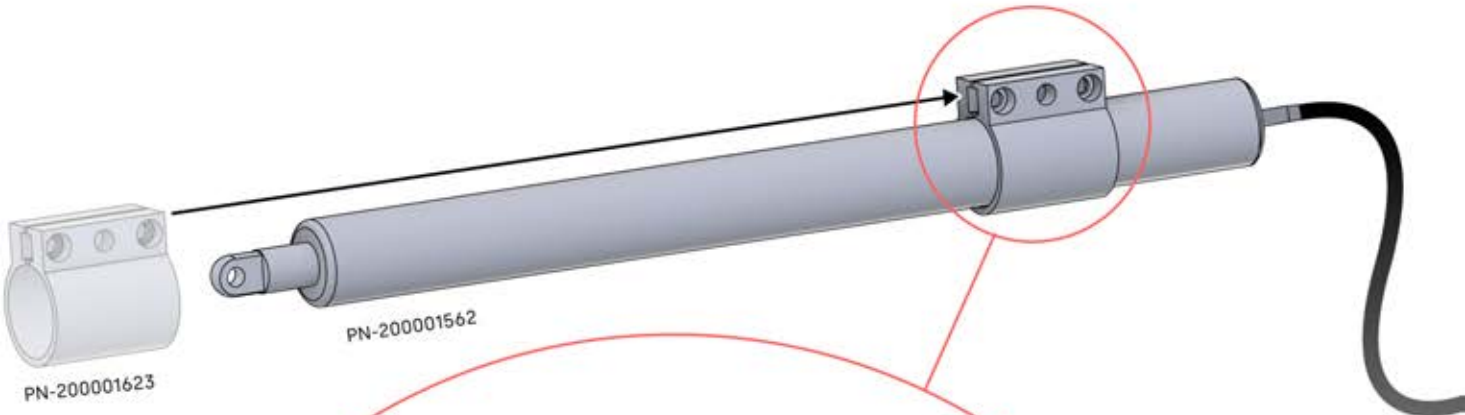

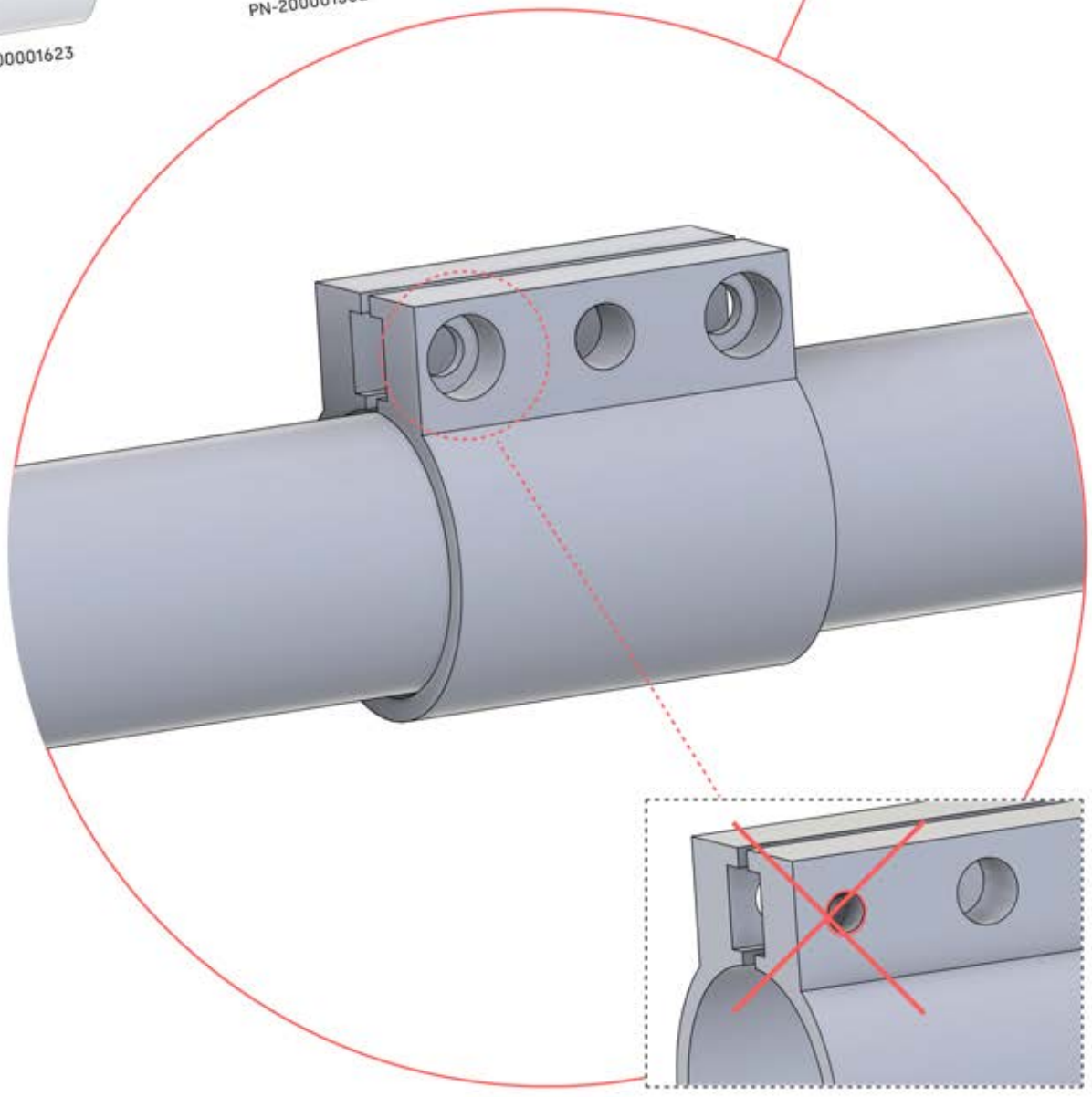

30

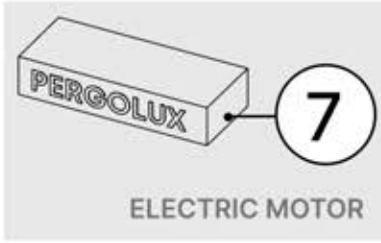

ELECTRIC MOTOR



PN-200001625

2x

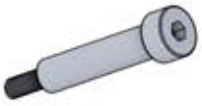

PN-200001624

1x

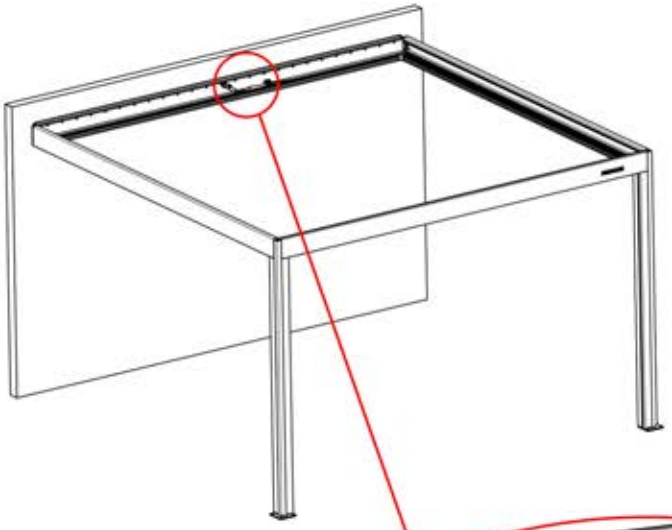

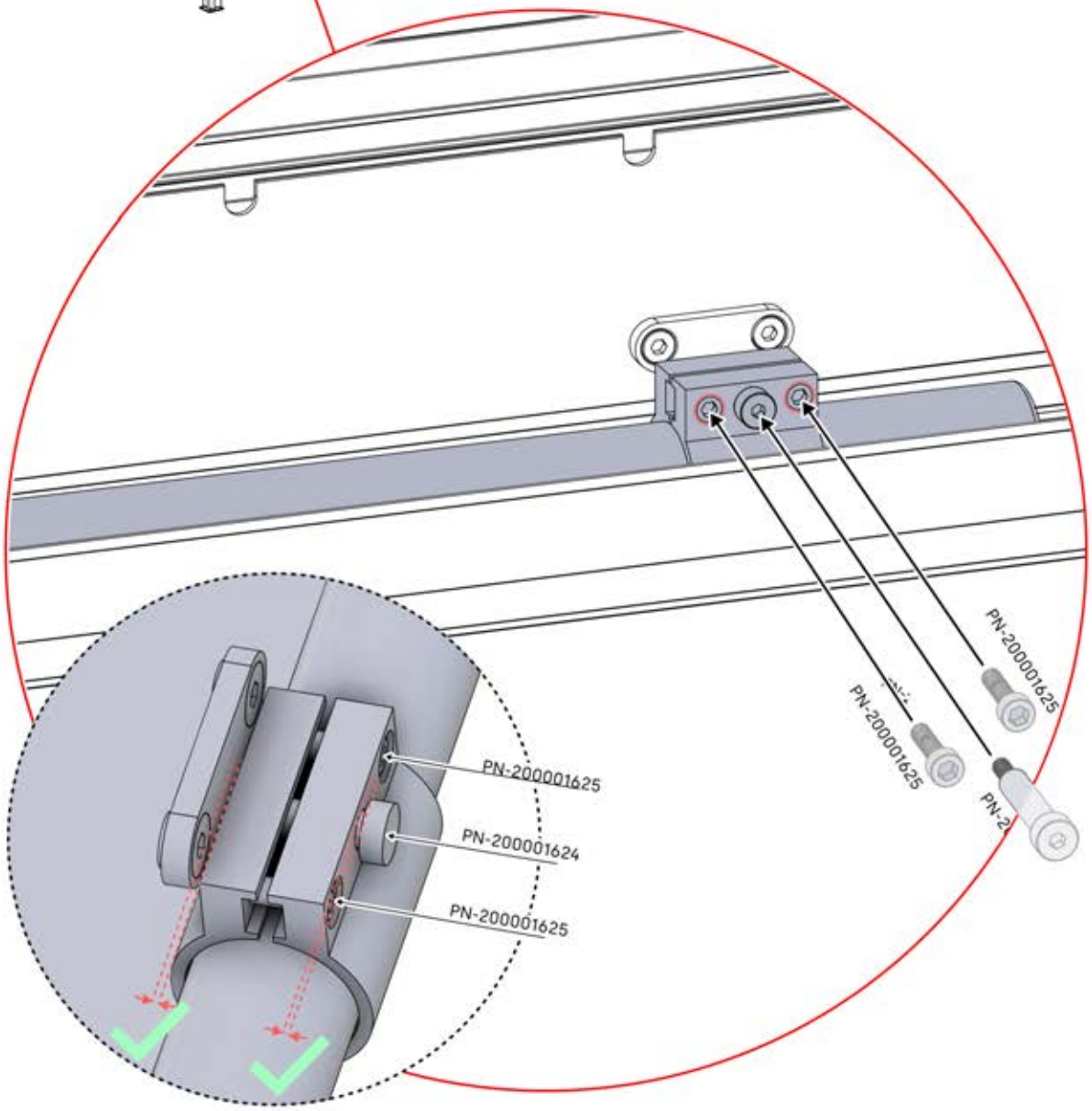

31

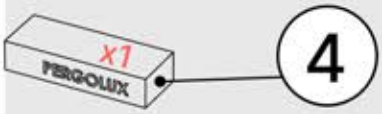

ANTHRACITE: B233
WHITE: B241
BLACK: B237



PN-200003372
1x



PN-200000502
1x



PN-200003373
1x



PN-200000561
1x

PN-20000
3371 Zip Bag

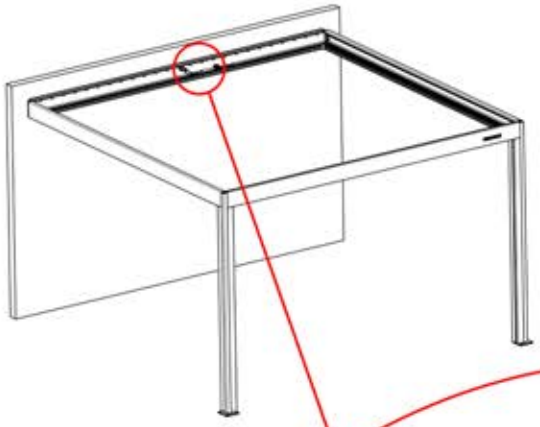

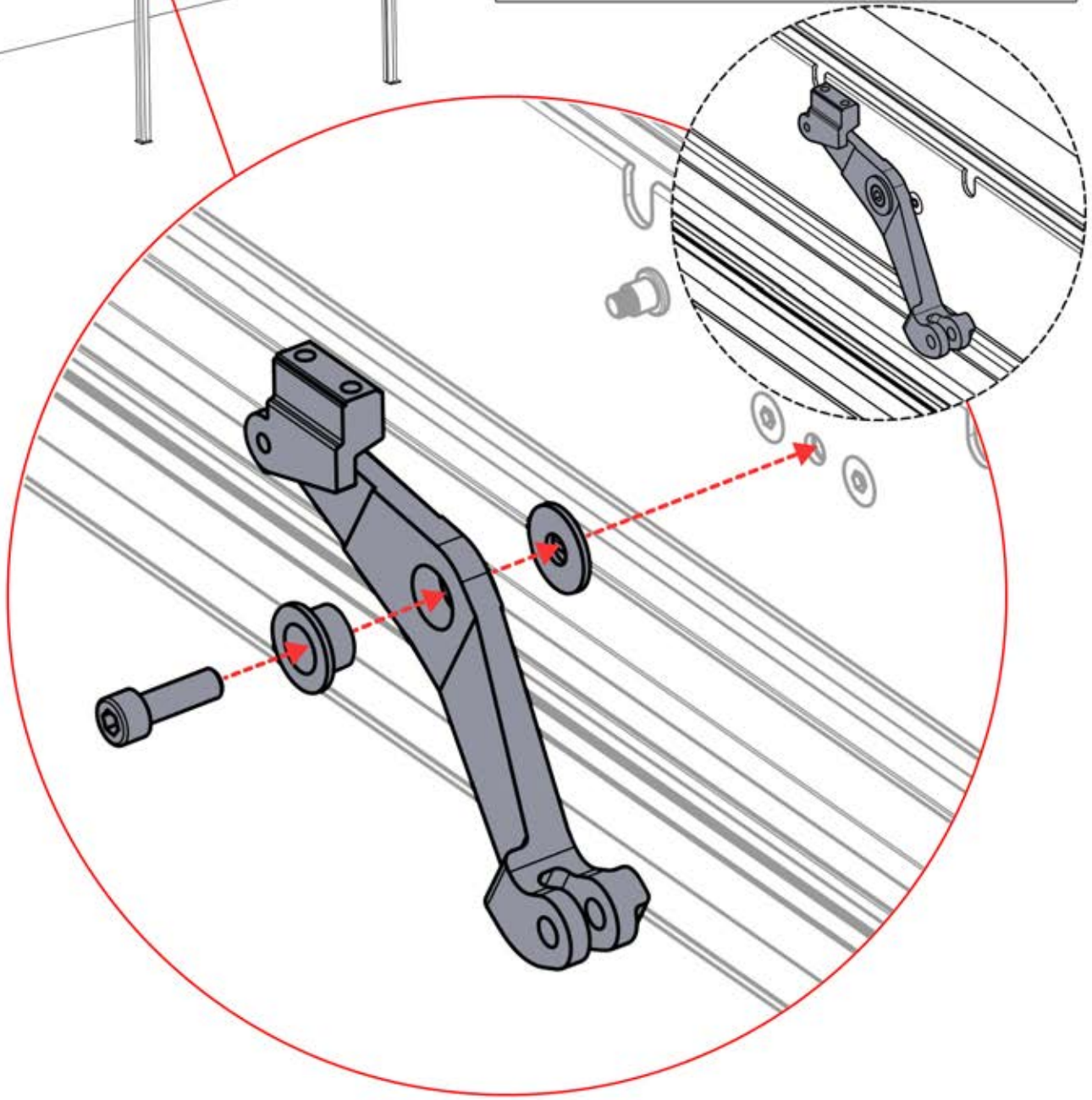

32

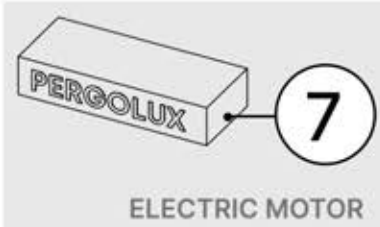

ELECTRIC MOTOR

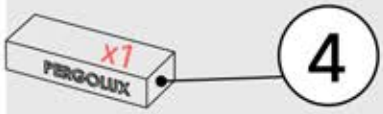

ANTHRACITE: B233
WHITE: B241
BLACK: B237



PN-200001562
1x



PN-200001946
1x

PN-20000
3371
Zip Bag

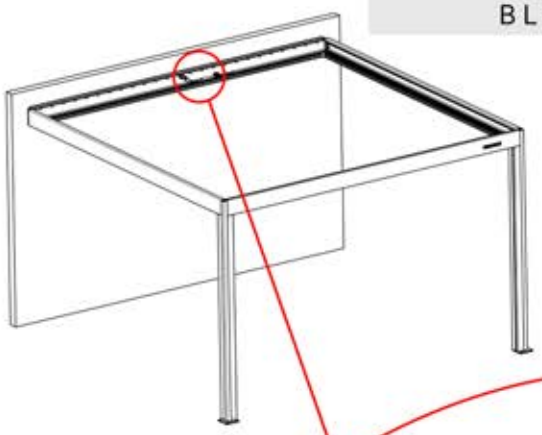

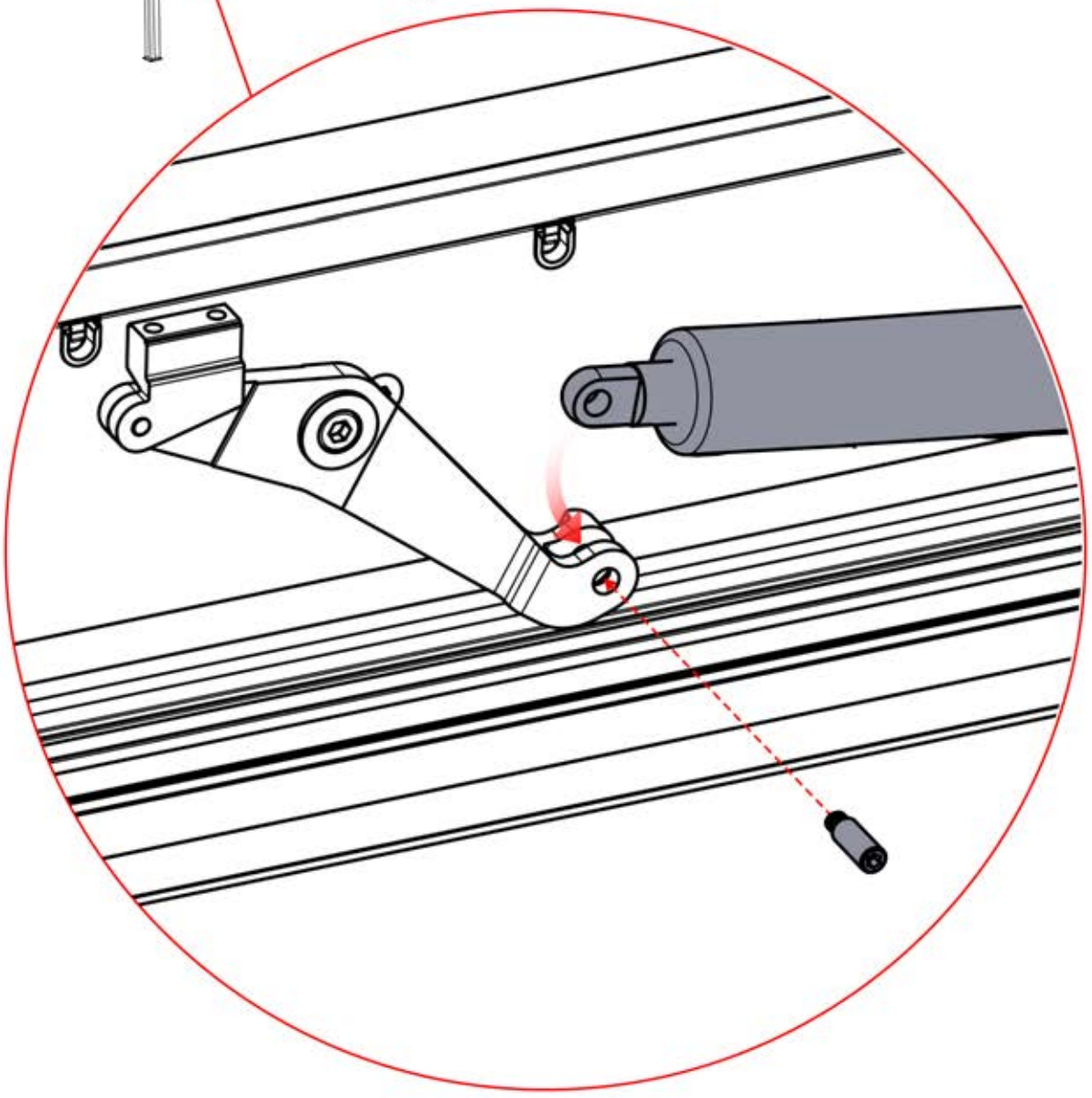

INPUTS AND OUTPUTS

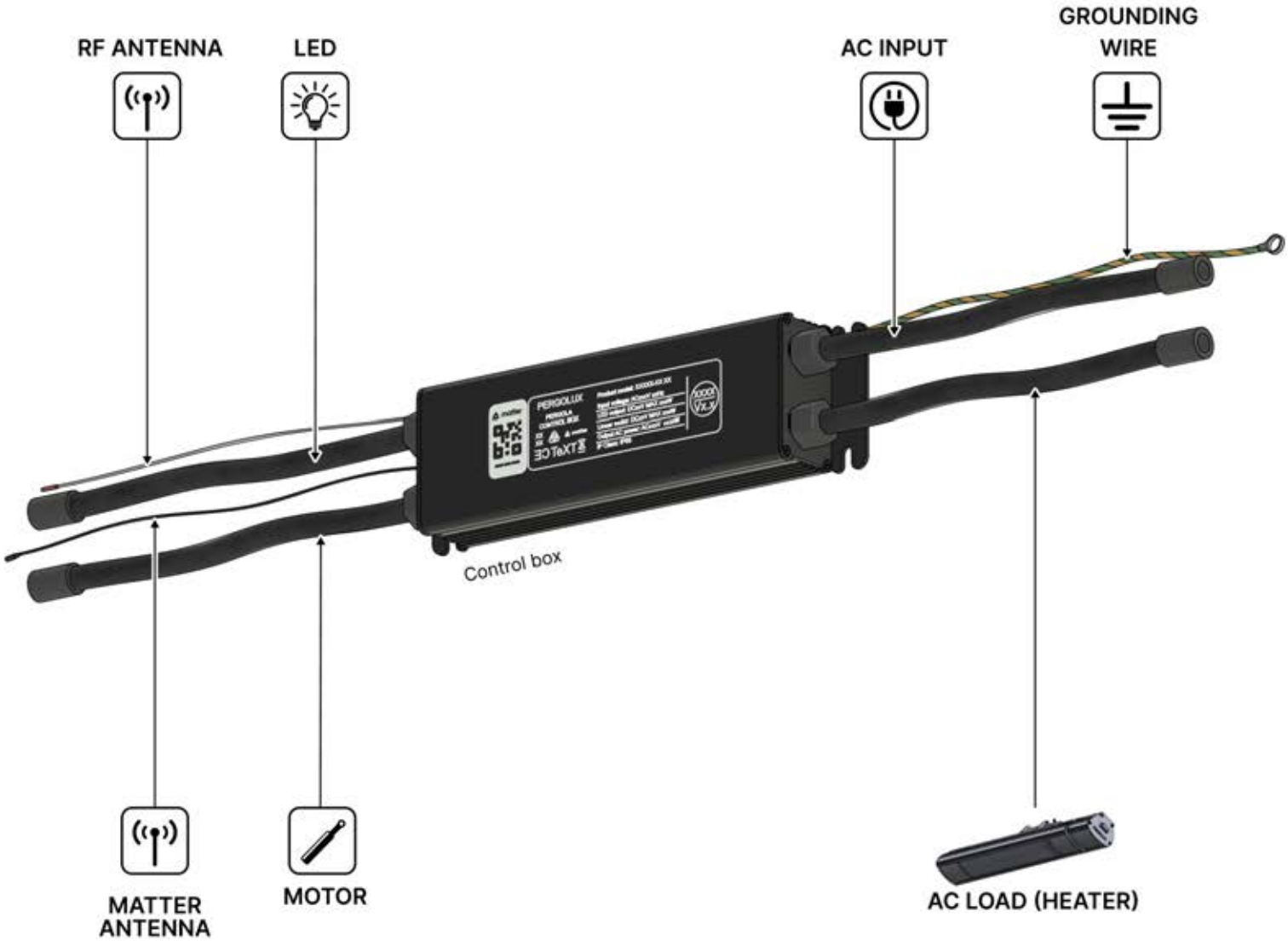

INFORMATION





PN-200003324

1x

PN-20000 3309 Zip Bag

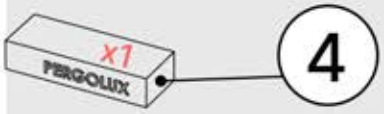

ANTHRACITE: B233
WHITE: B241
BLACK: B237

If you are planning to route the power cable through the rear corners, drill a **10 mm** diameter hole in the corner cover (**PN-200003324**) as illustrated. This allows the cable to pass through during installation in **step 60.**

Note: The illustration shows the hole location for a right-corner assembly; if routing from the left corner, drill the hole on the opposite side.

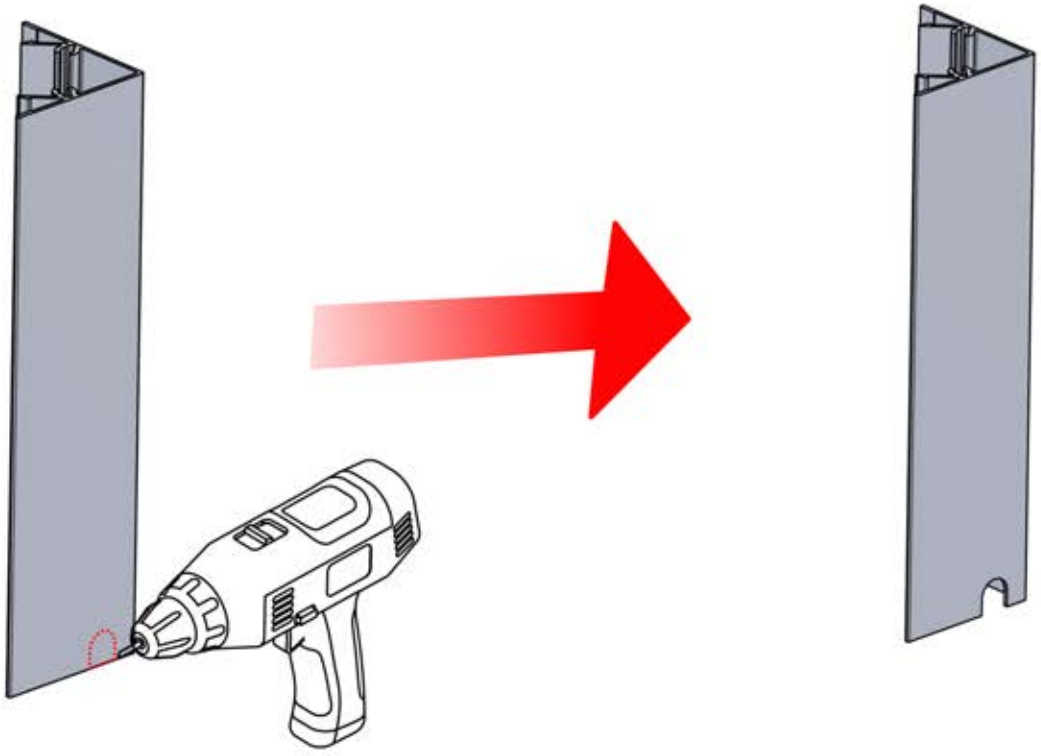

33

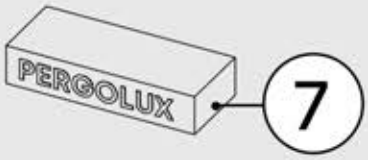

CONTROL BOX



Control box

1x

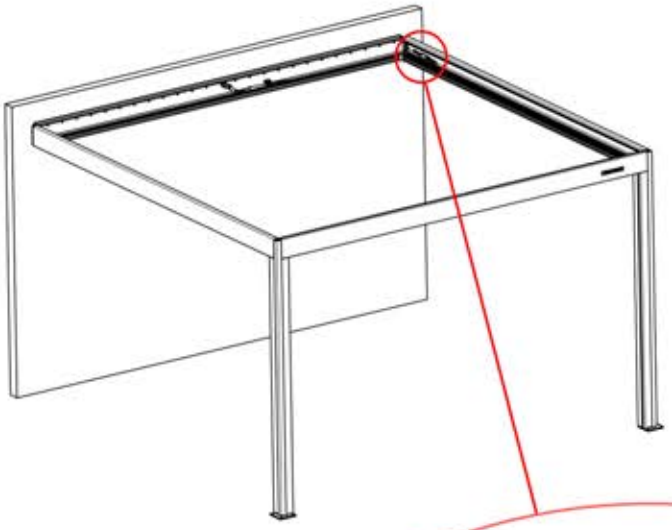

Control Box can be installed on Preferred W BEAM

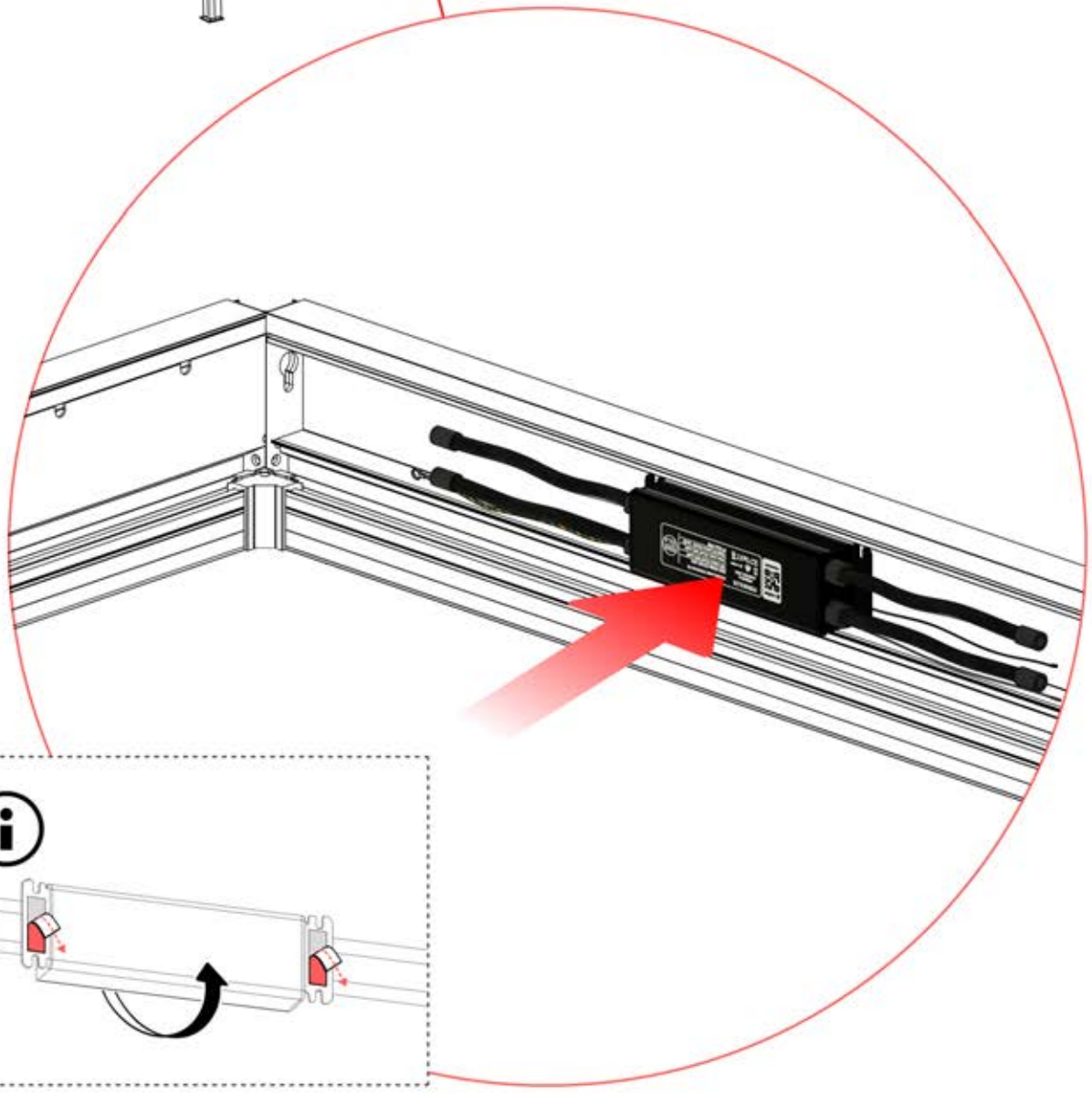

34

Connect grounding wire before connecting to power!



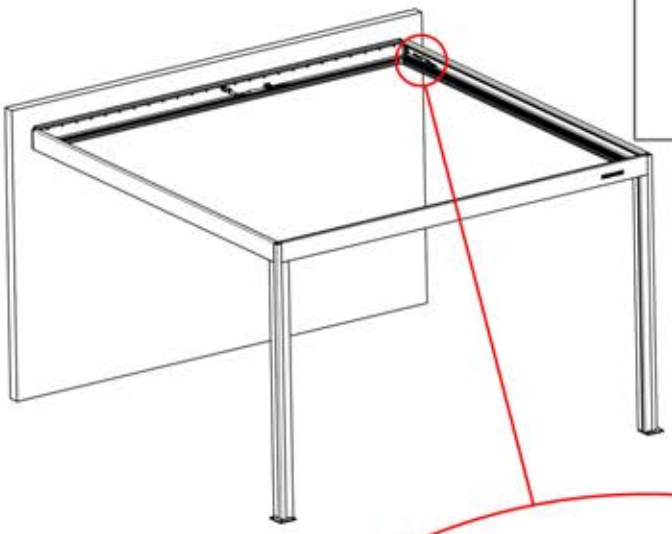

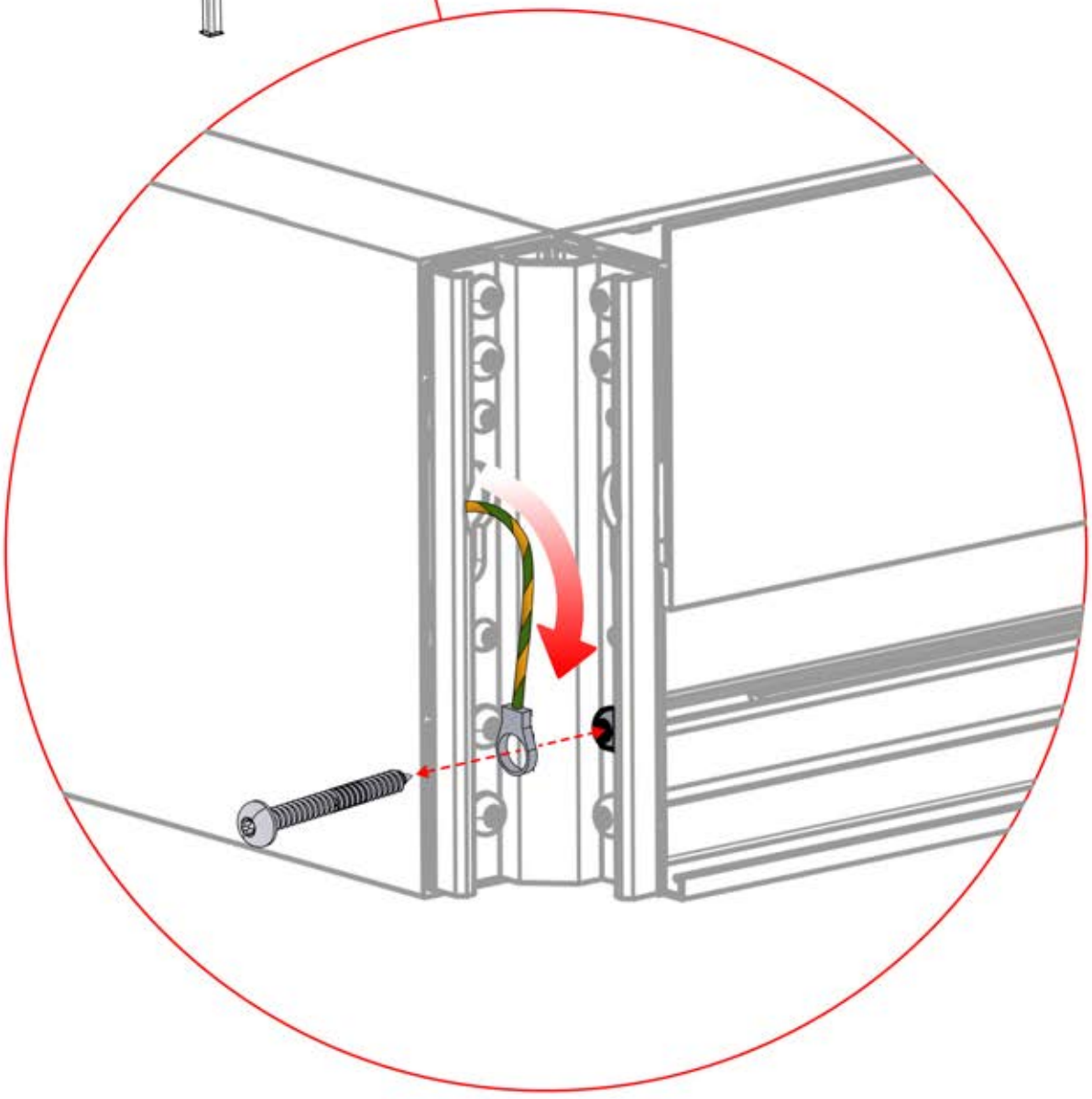

35



Y - cable

1x

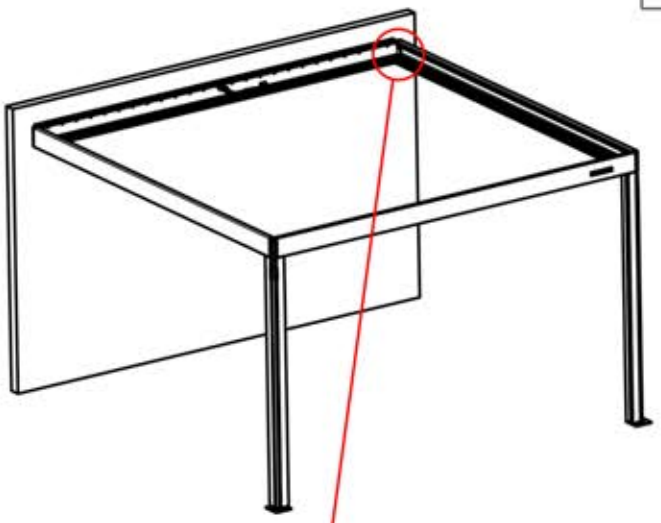



36

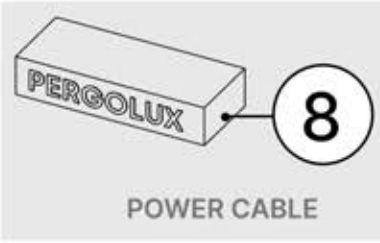

POWER CABLE



power cable
1x

Power Cable can be routed through all the Poles.

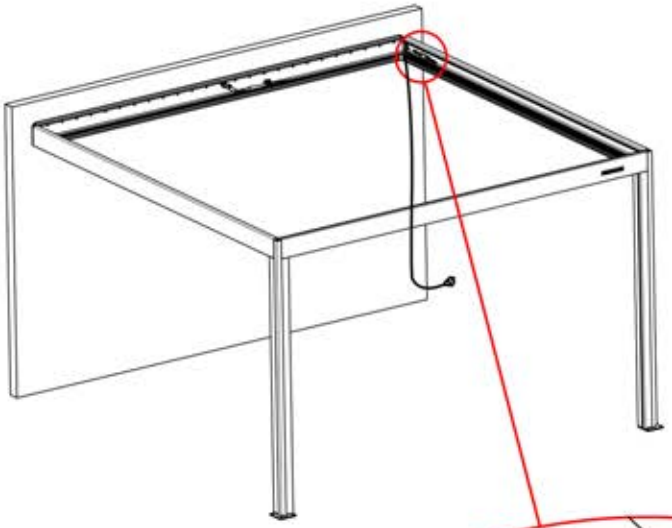

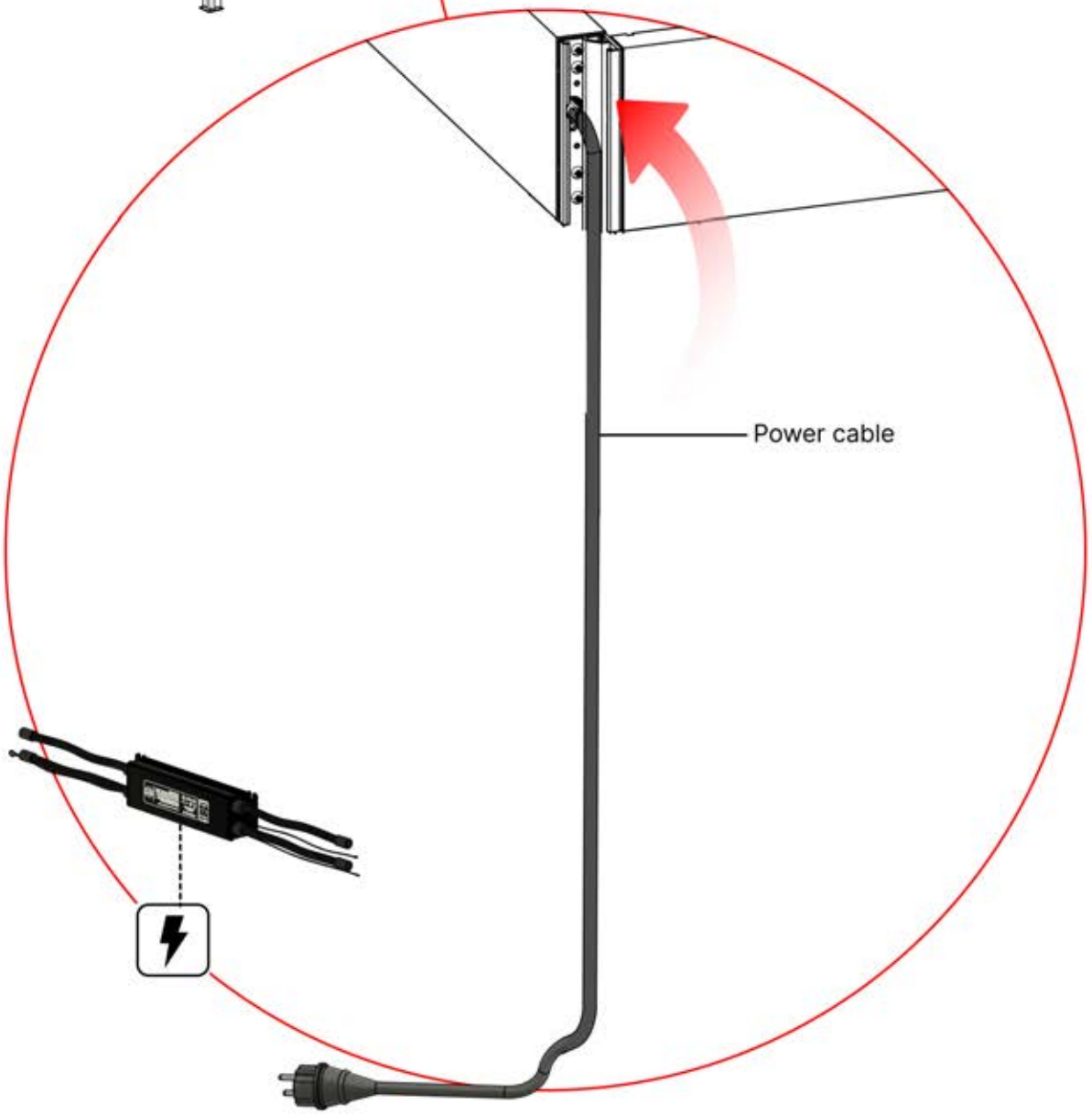

37

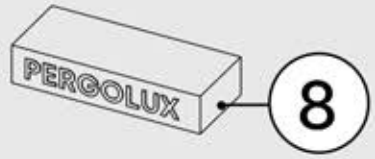

POWER CABLE



Power cable

1x

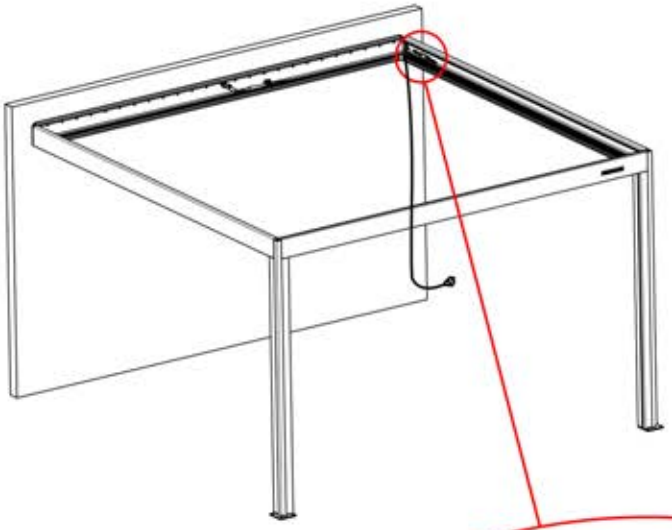

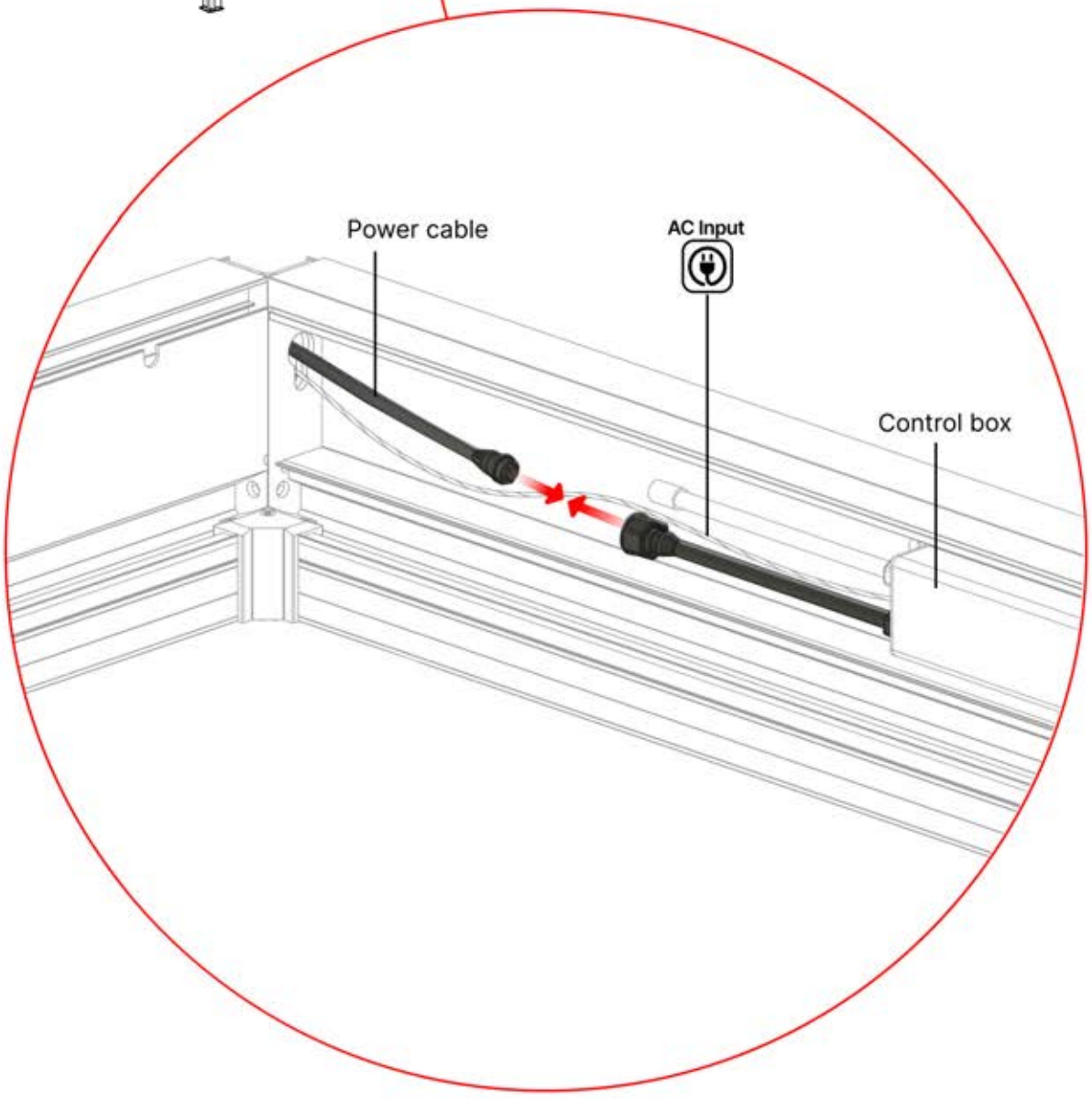

38

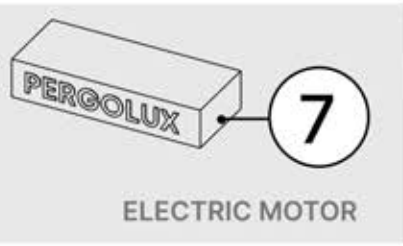

ELECTRIC MOTOR



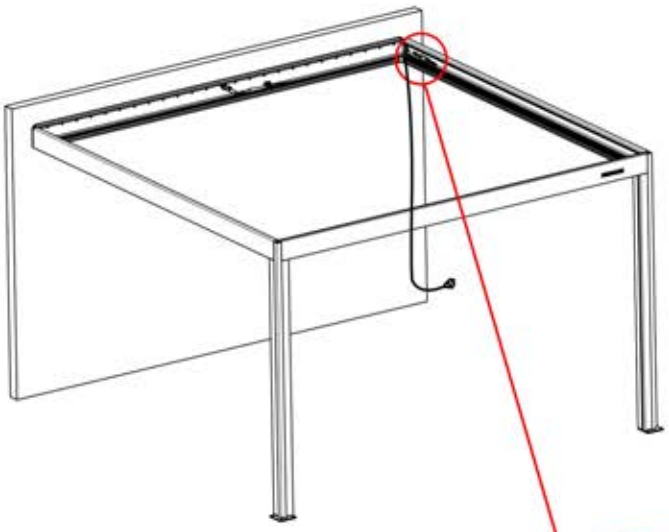

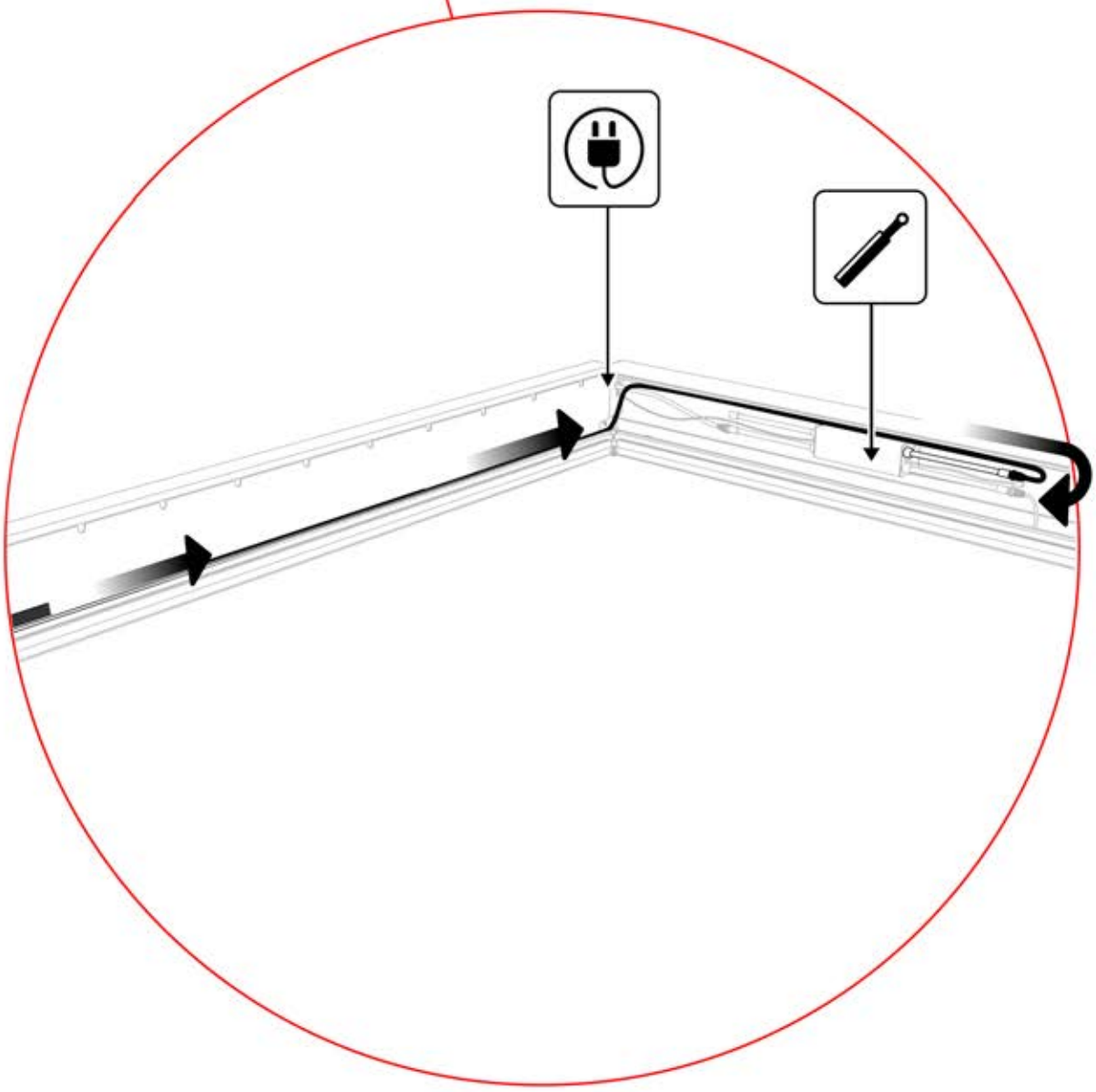

1

If you are going to install a heater, do it now.

Follow the instructions in the heater assembly manual.

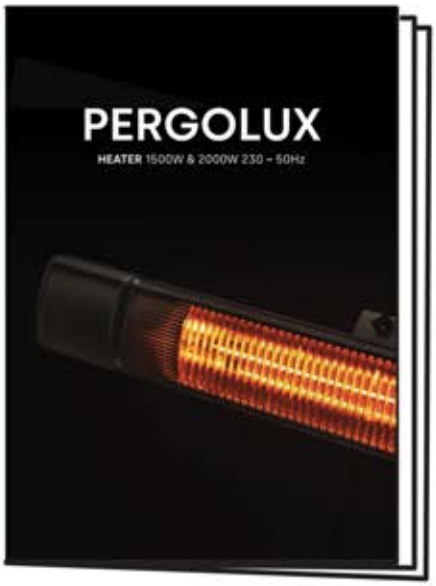

2

It's time to connect the motor and LED lights to the pergola control box.

Follow the instruction in the assembly manual.



40

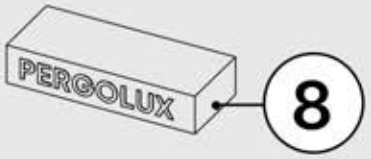

CONTROL BOX

Keep the Matter Antenna wire free and do not tie them with LED and Motor wire

S4



PN-200002683

5x



PN-200002684

10x

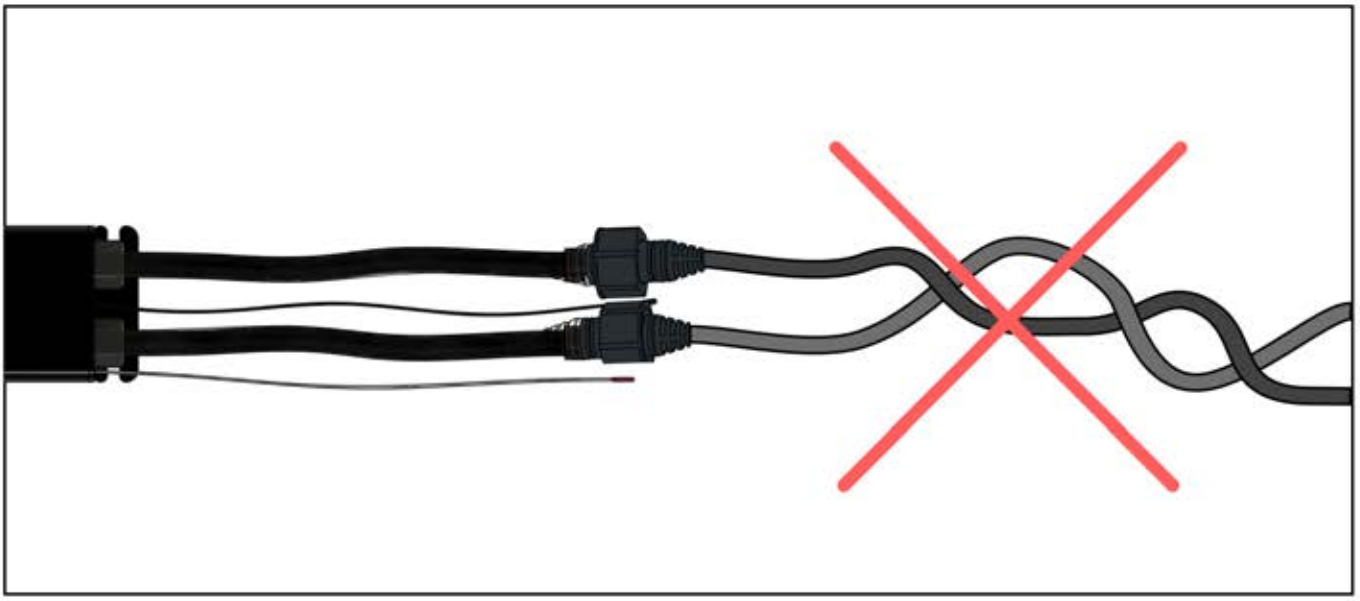

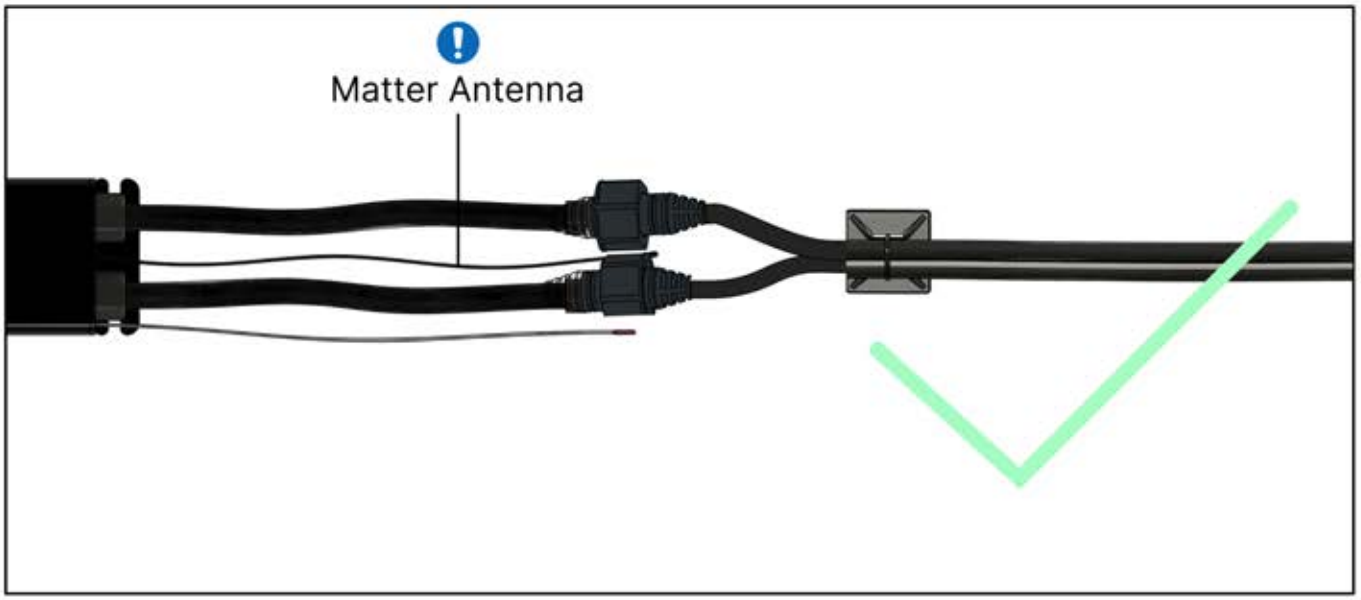

41

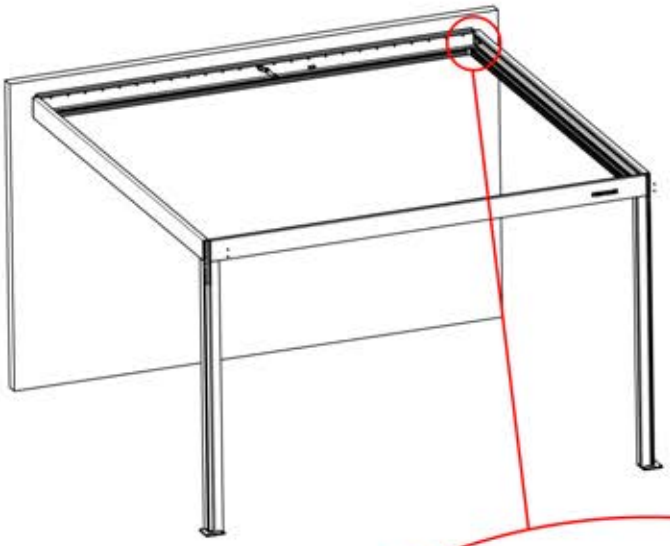

Route the Matter Antenna and place it below the highlighted part(PN-200002622).

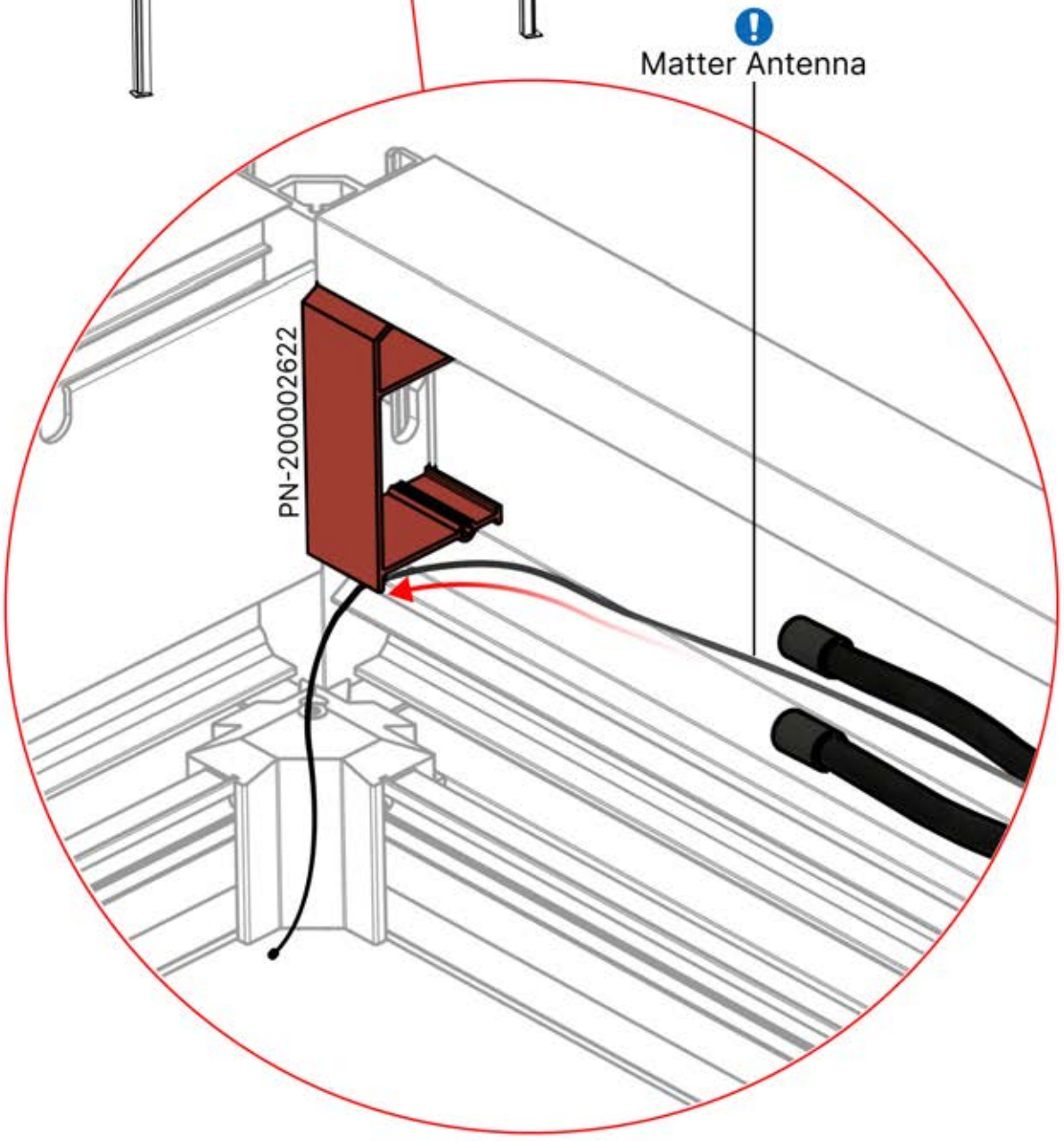

42

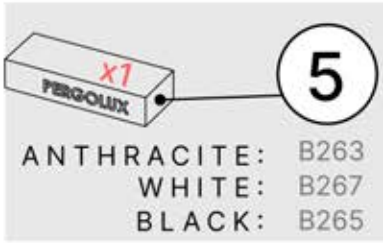

ANTHRACITE: B263
WHITE: B267
BLACK: B265



PN-200002903
2x



PN-200003204
2x

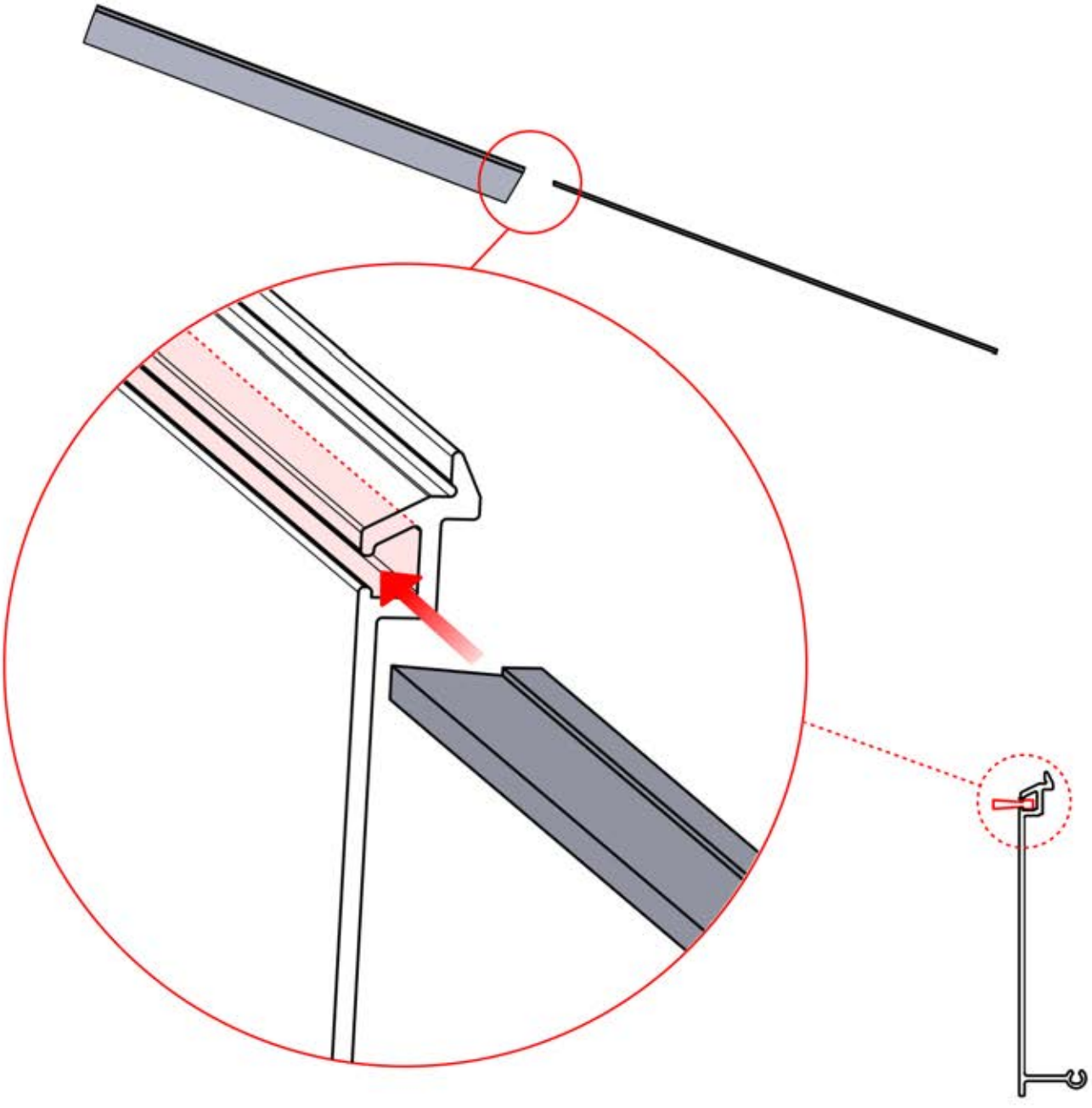

43

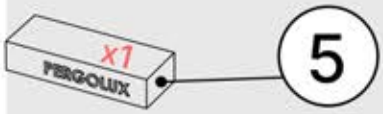

5

ANTHRACITE: B263
WHITE: B267
BLACK: B265



PN-200002903

2x

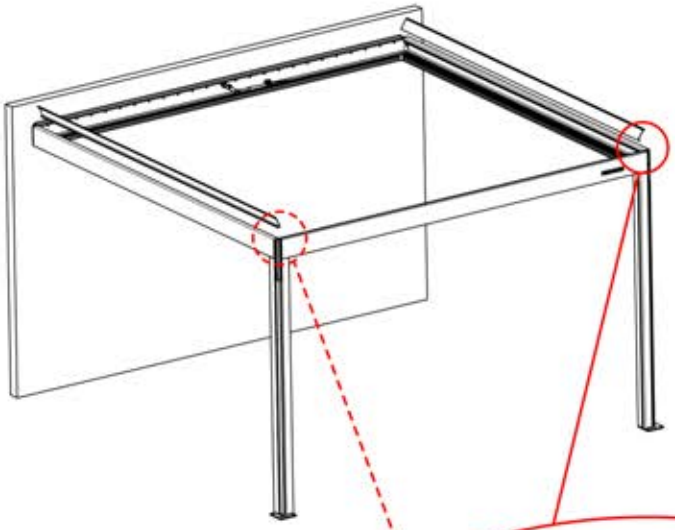

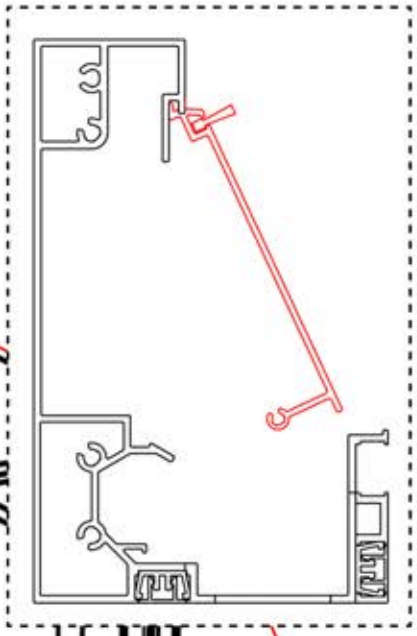

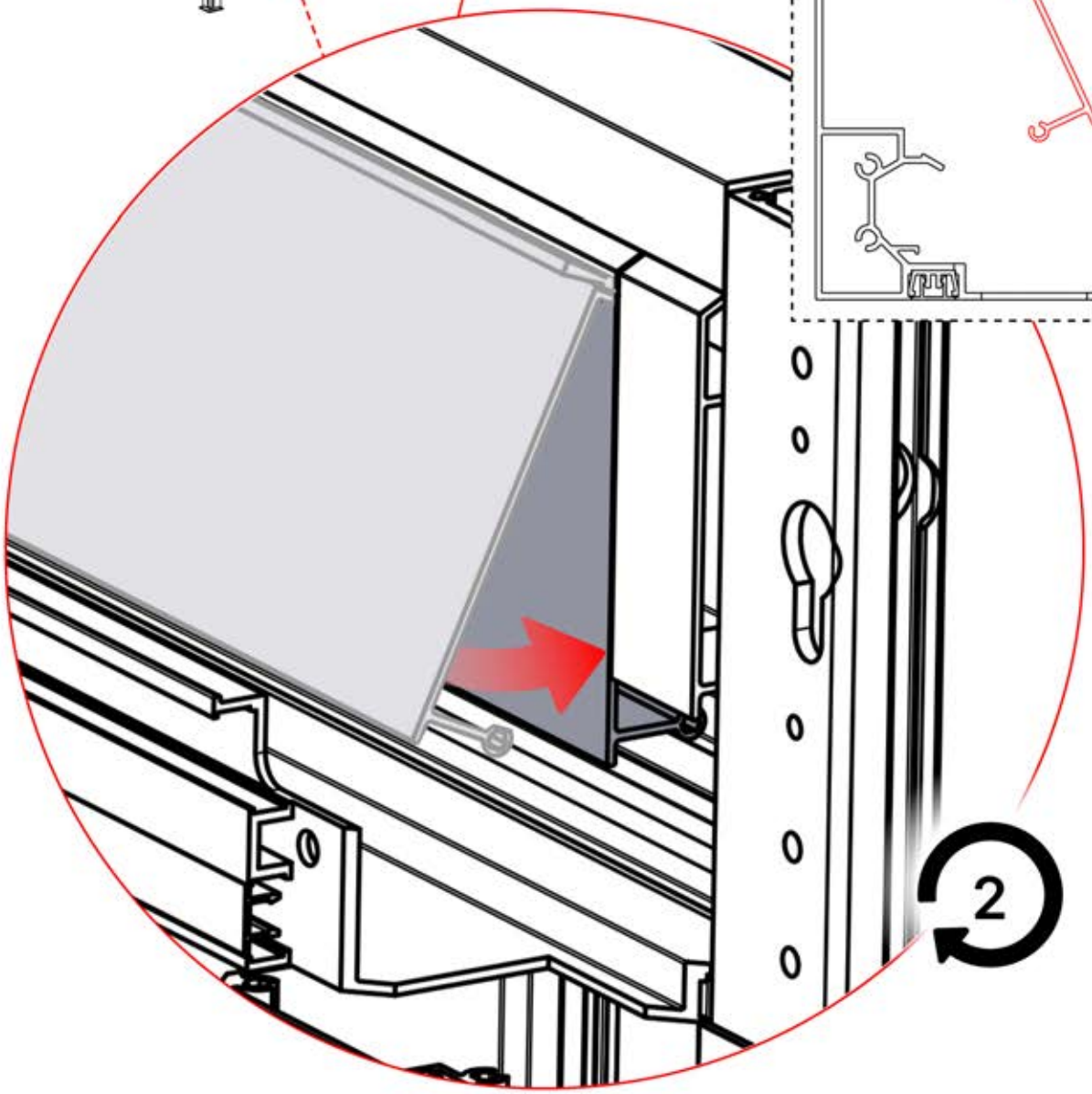

INFORMATION

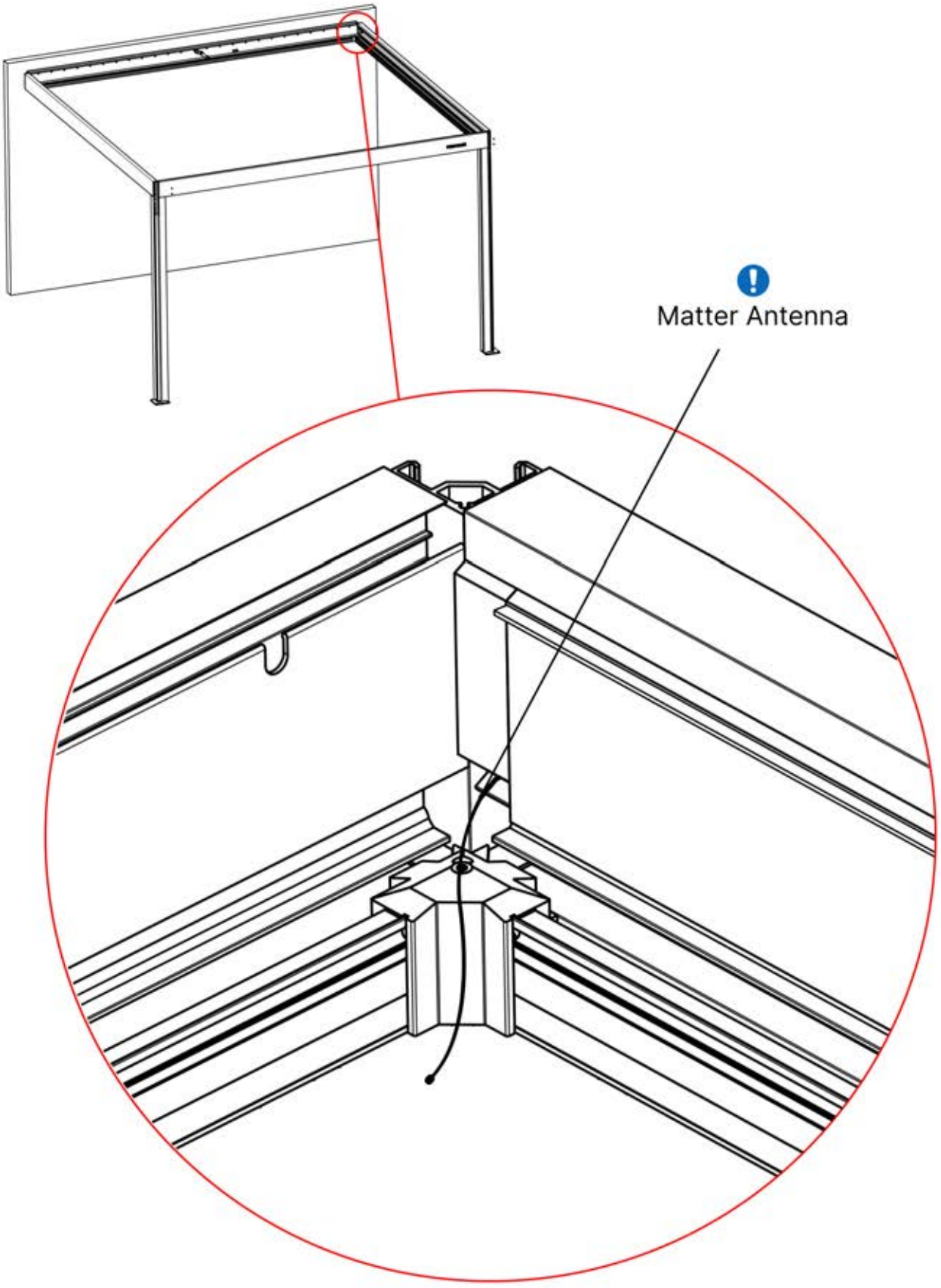

44



Matter Antenna

1x



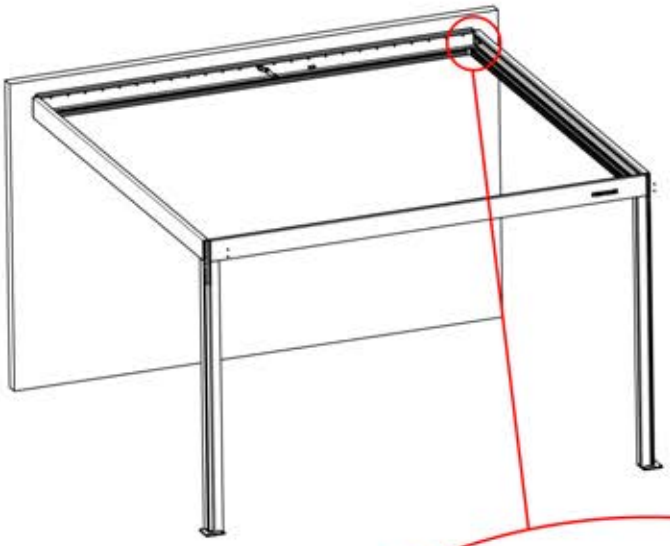

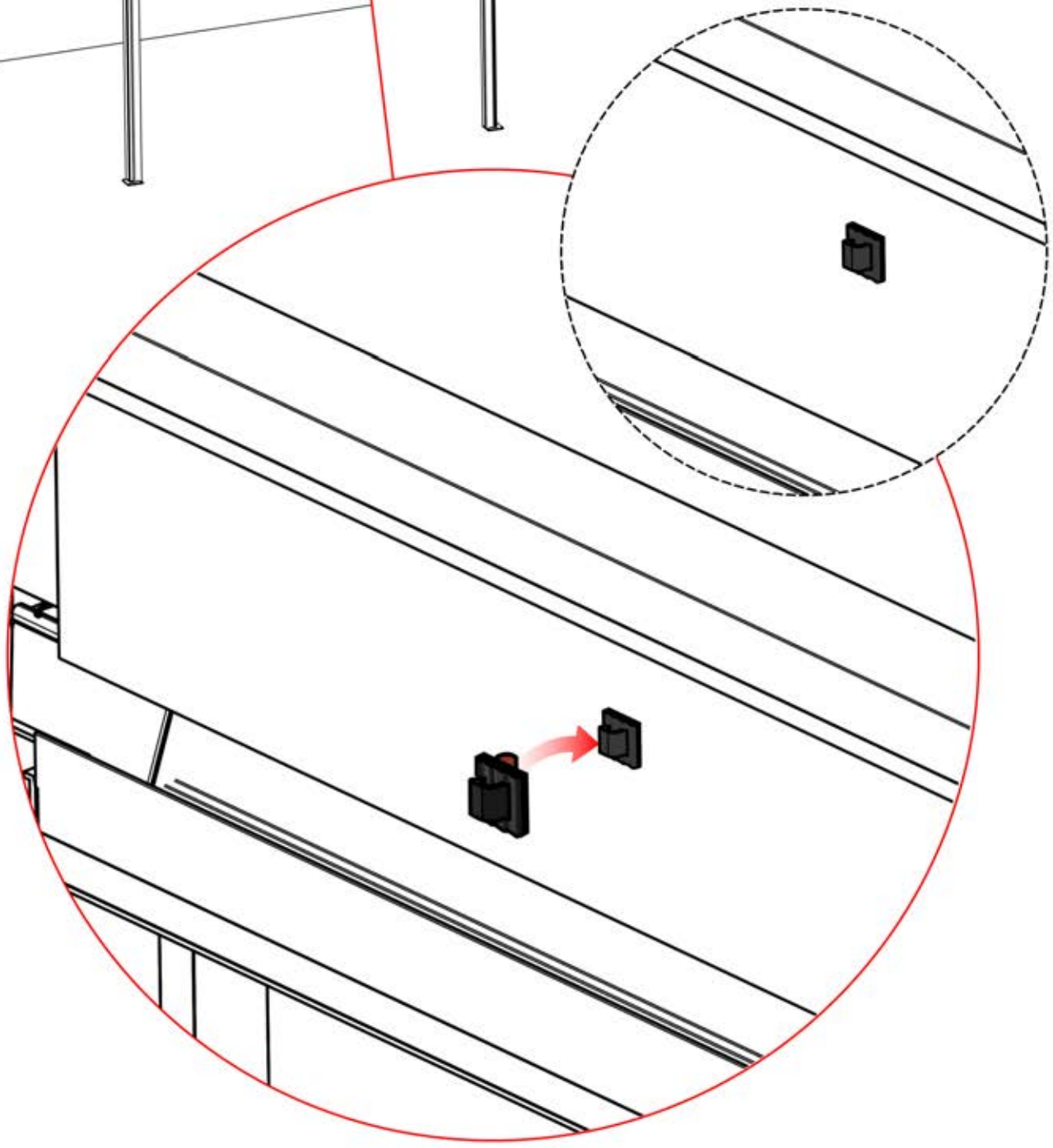

45

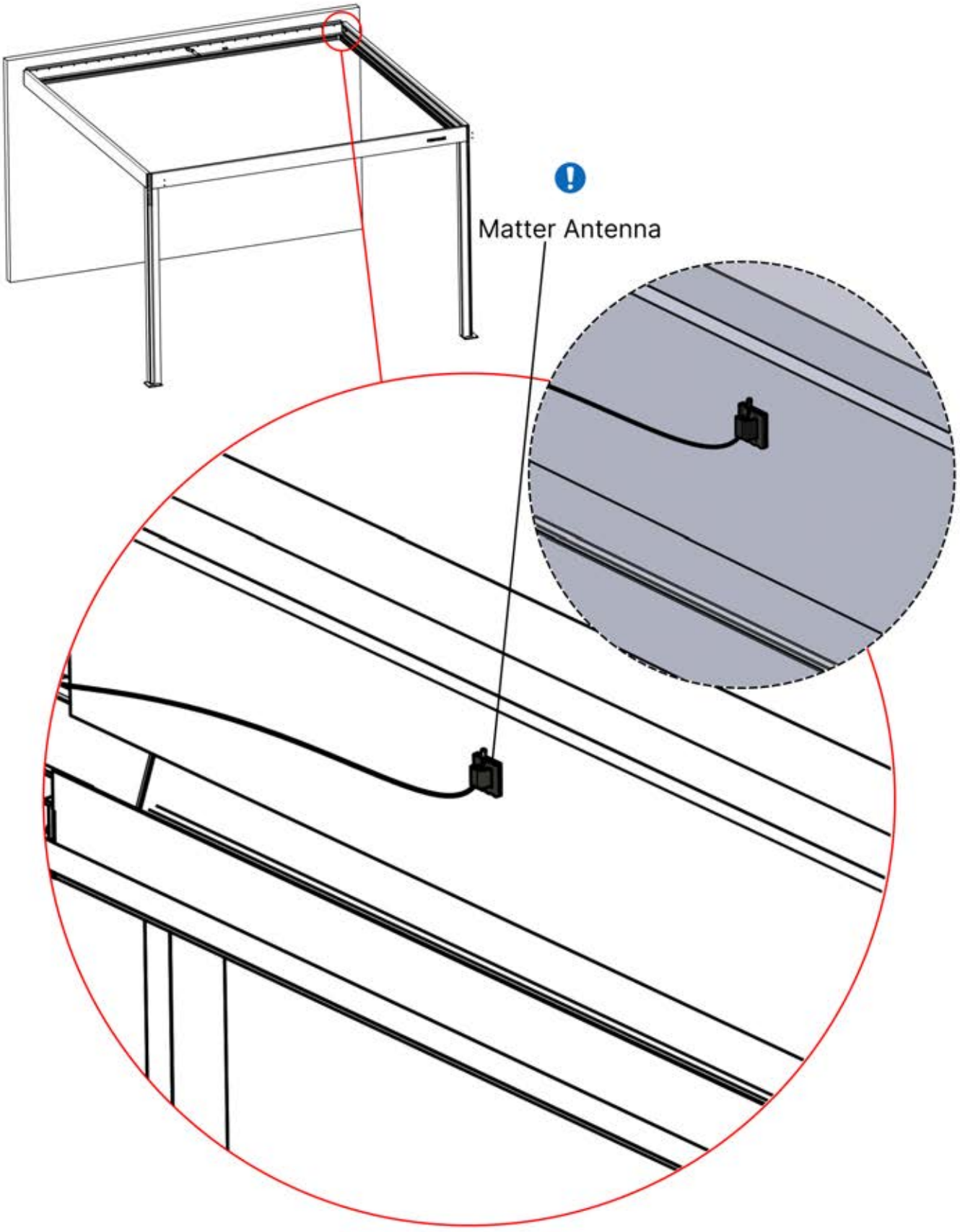

46

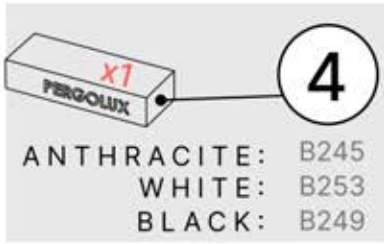

ANTHRACITE: B245
WHITE: B253
BLACK: B249

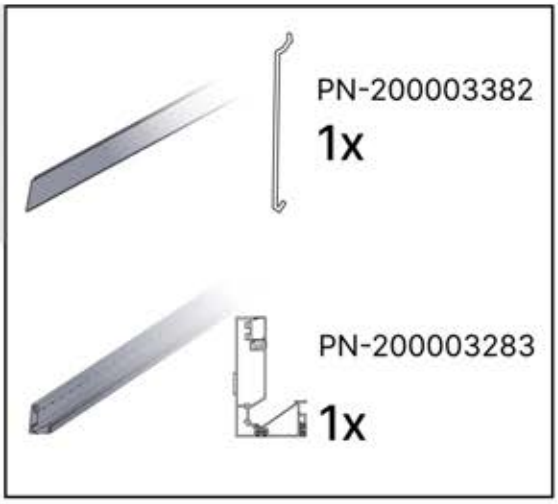

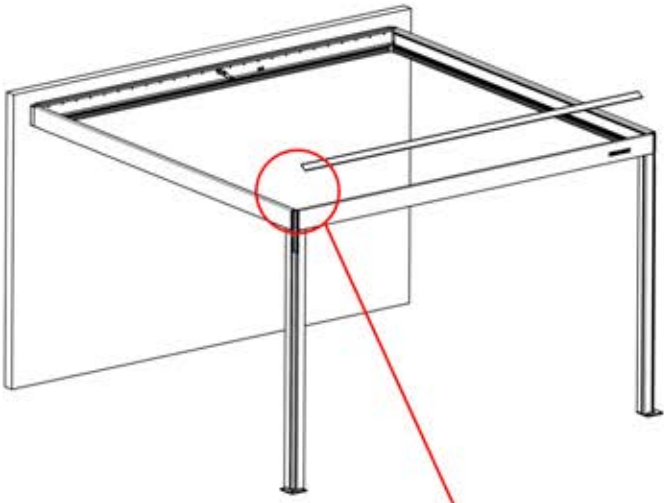

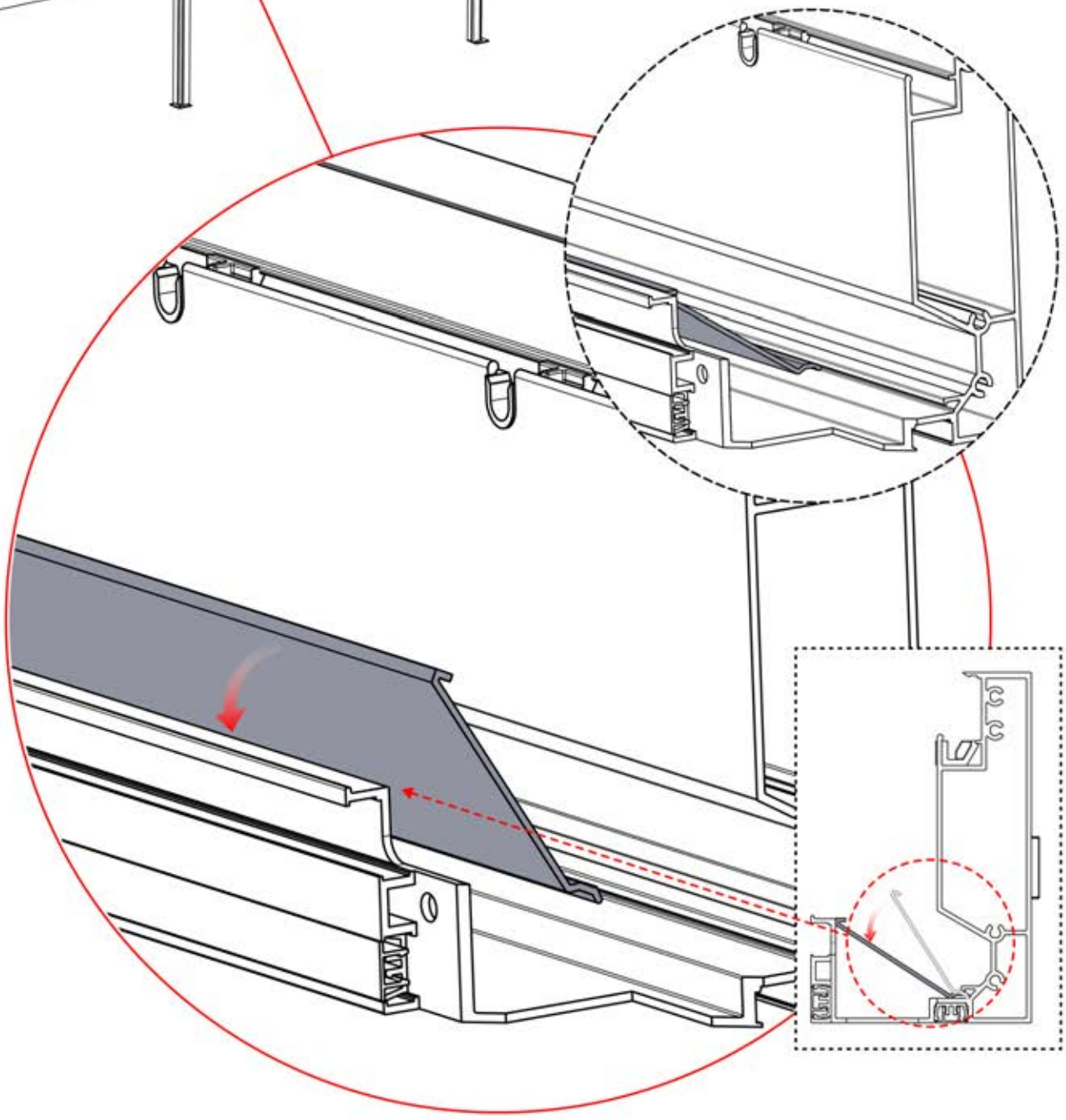

47

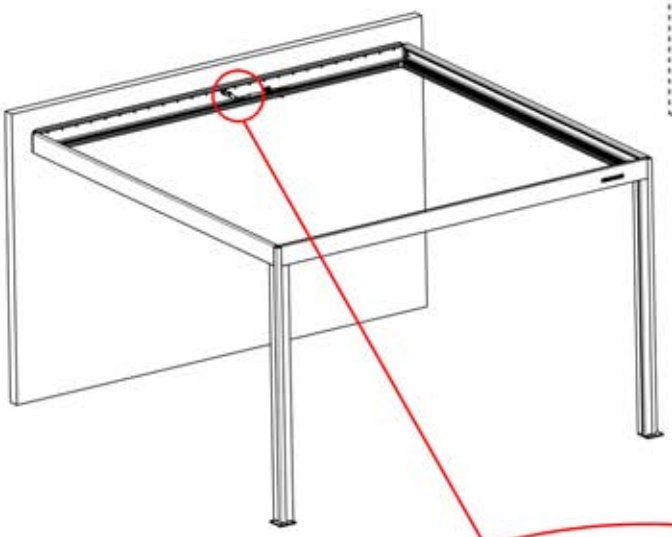



Remote
Controller

Adjust motor to
prepare for
assembly on step 48

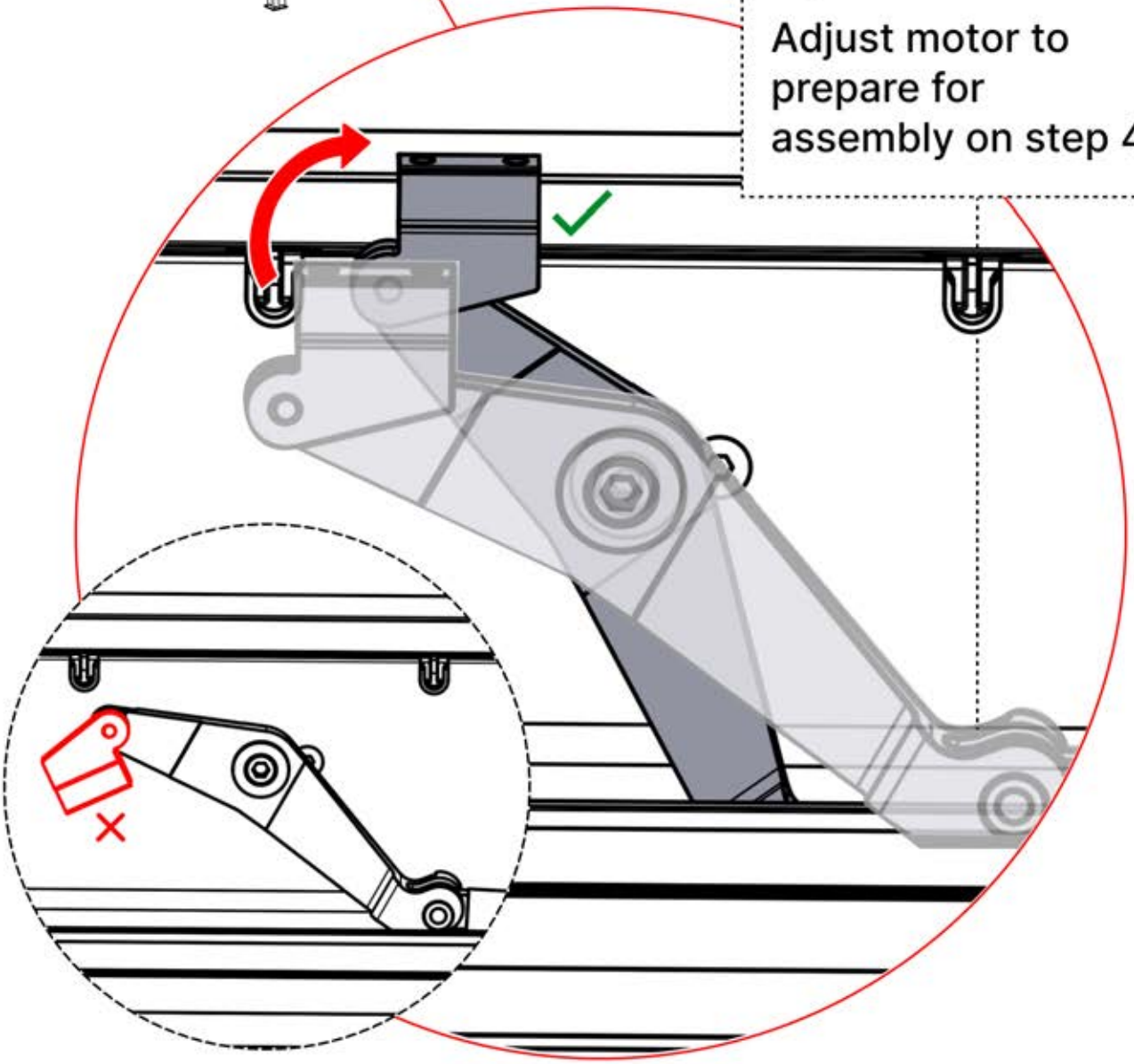

48

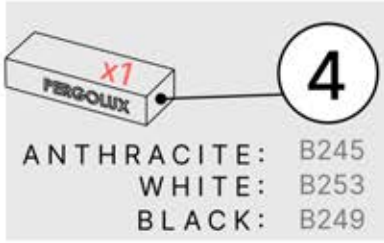

ANTHRACITE: B245
WHITE: B253
BLACK: B249



PN-200002613
1x



PN-200000826
2x

PN-20000
3320 Zip Bag

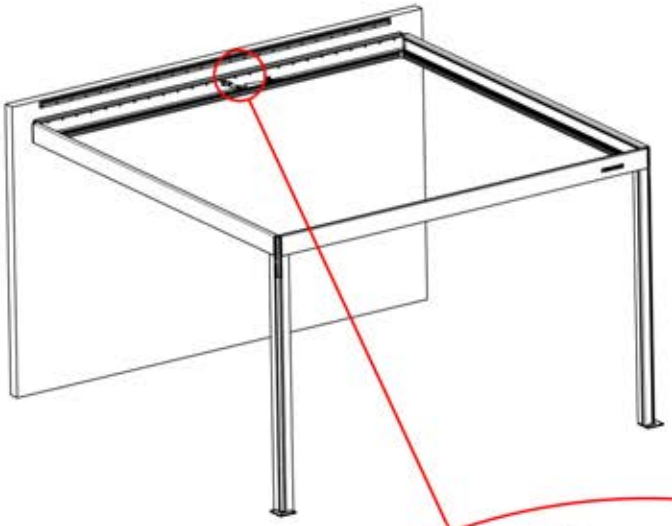

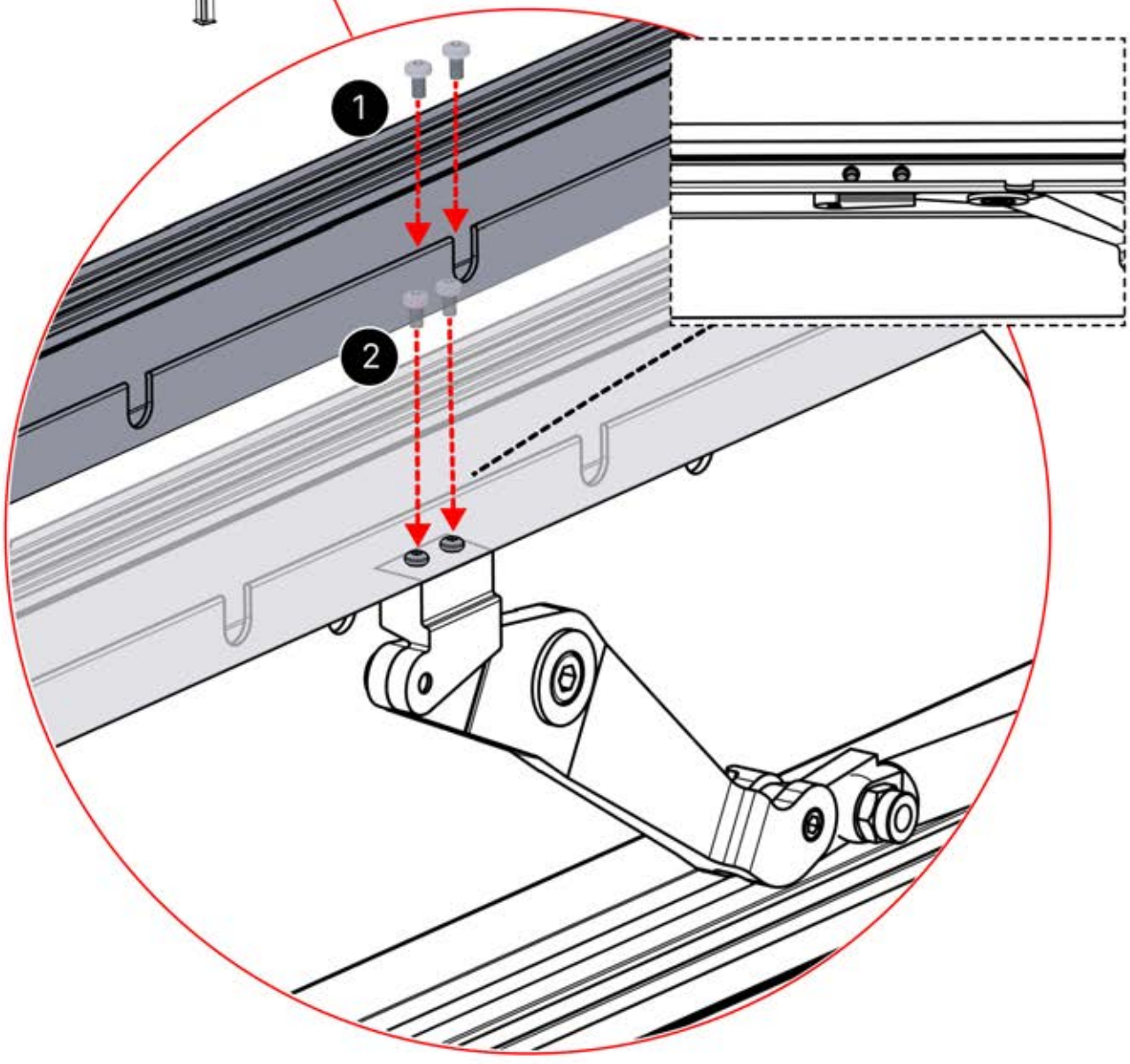

INHALT DER VERPACKUNG

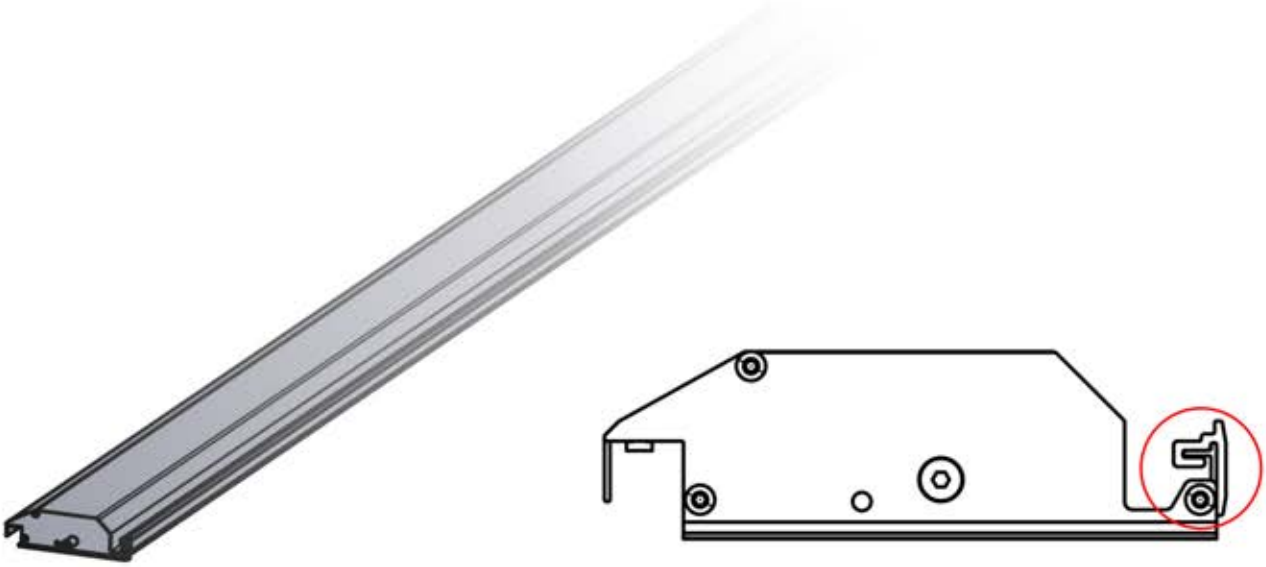



PLR 150 G2 PRO ENDLAMELLE FS 4M PAKET

PN-200002975

1x

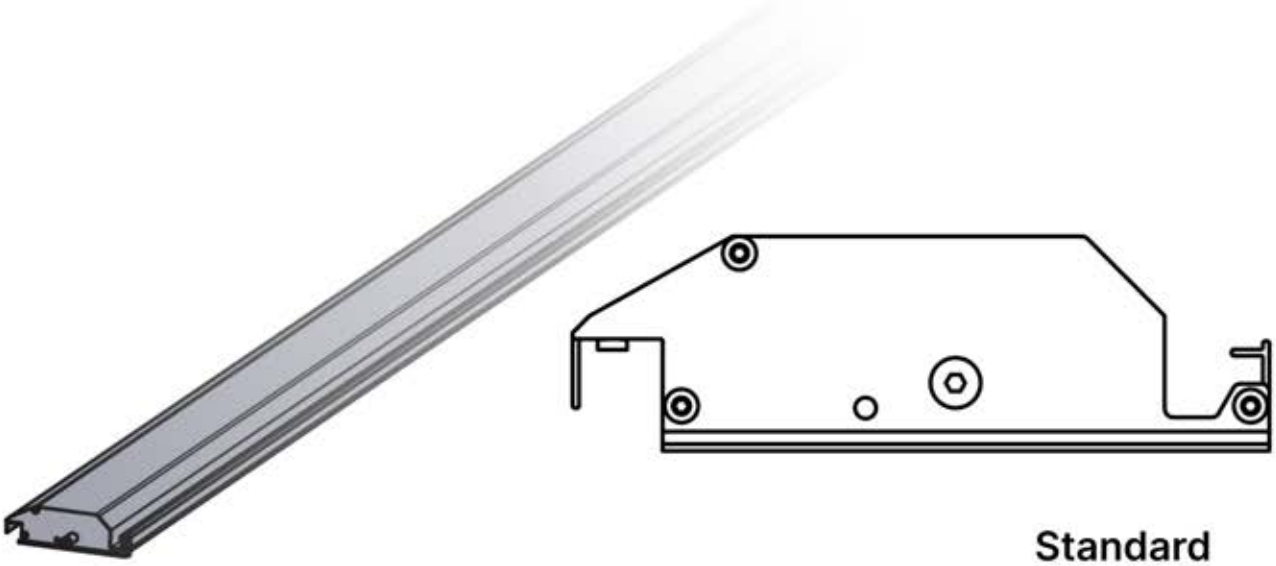

Standard

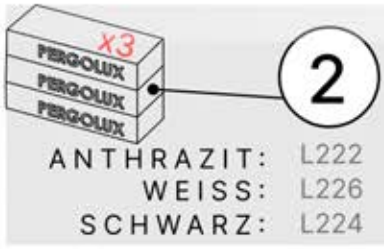

PLR 150 G2 PRO STANDARD-LAMELLE FS 4M PAKET

PN-200002883

Variable

49

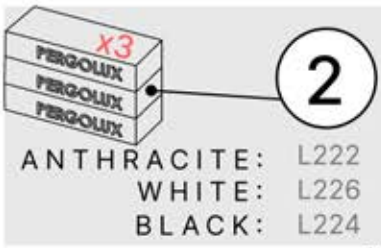

2

ANTHRACITE: L222
WHITE: L226
BLACK: L224

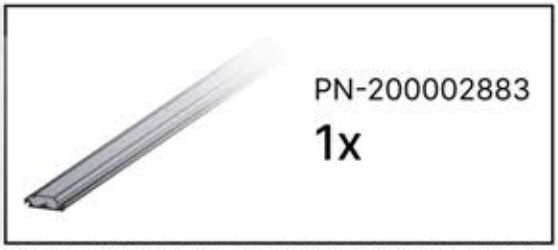

PN-200002883

1x

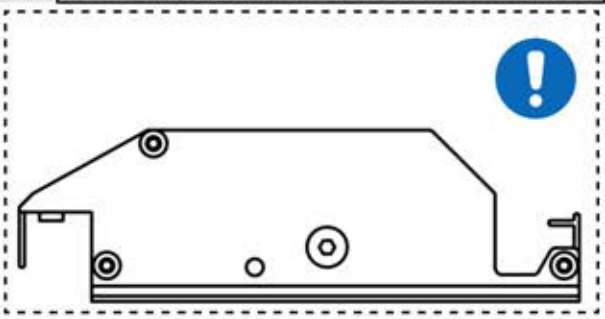

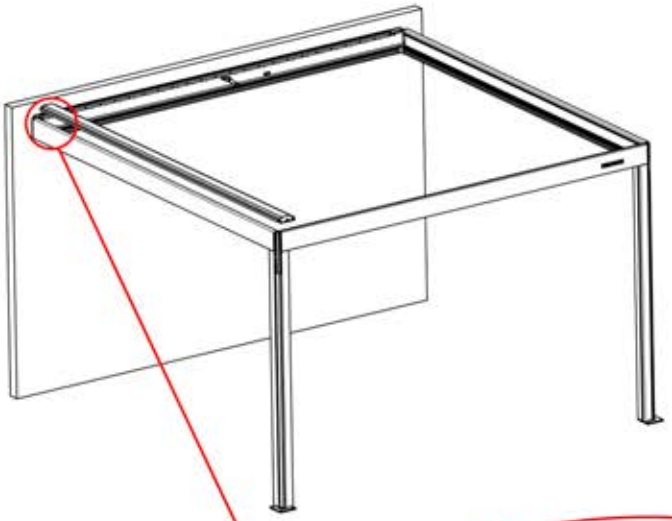

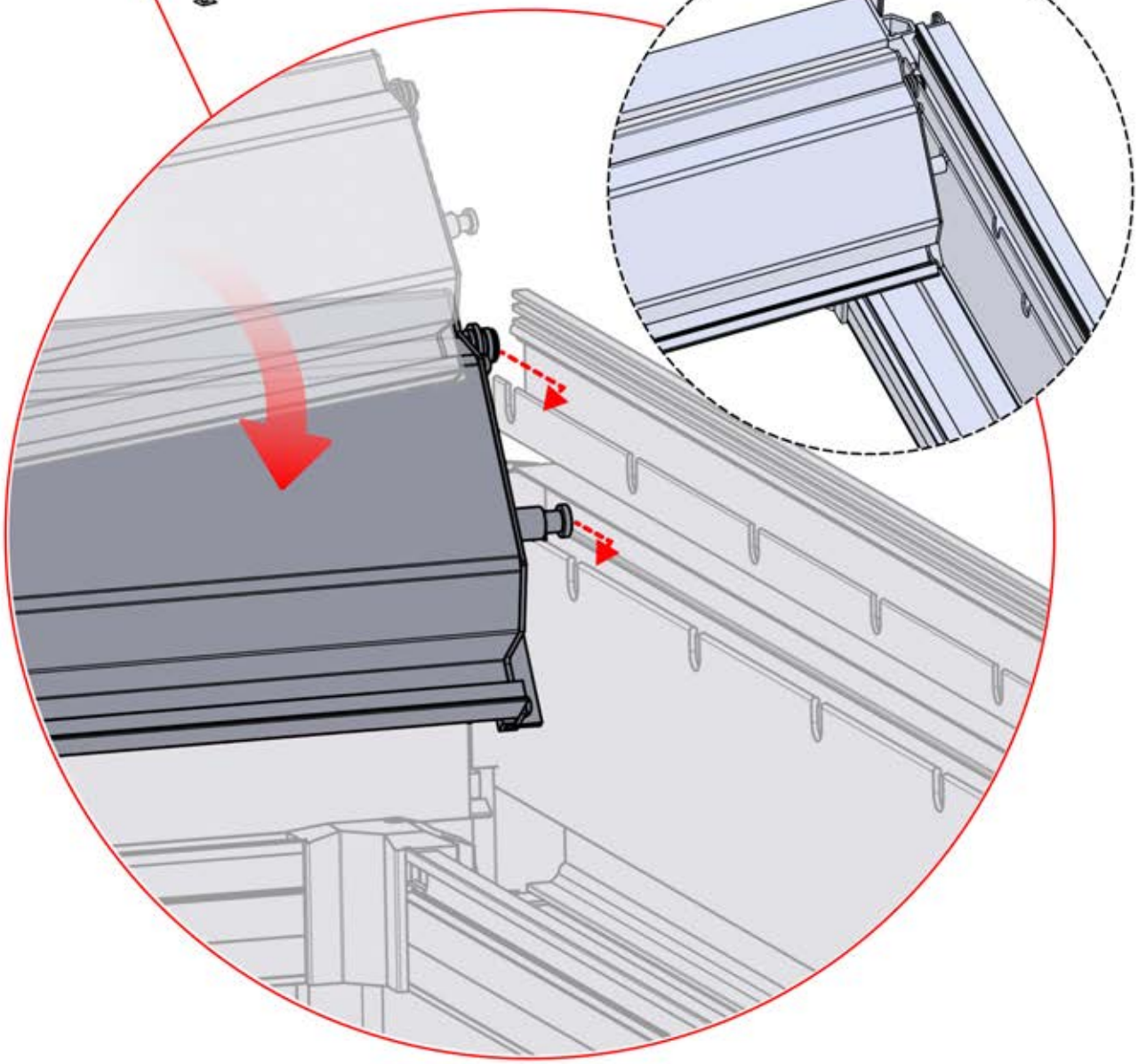

50

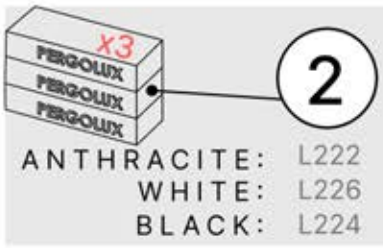

ANTHRACITE: L222
WHITE: L226
BLACK: L224

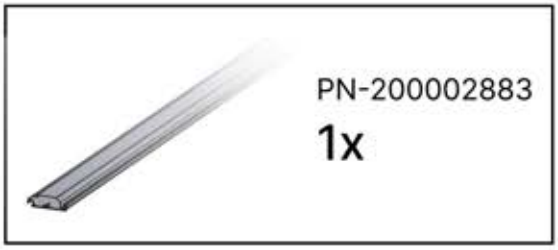

PN-200002883

1x

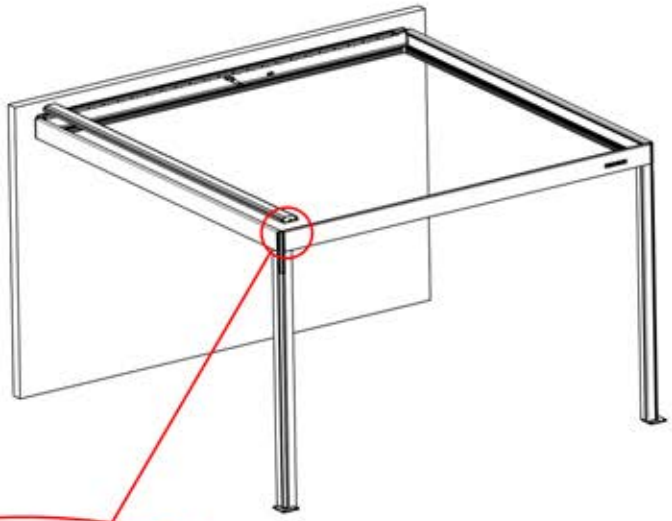

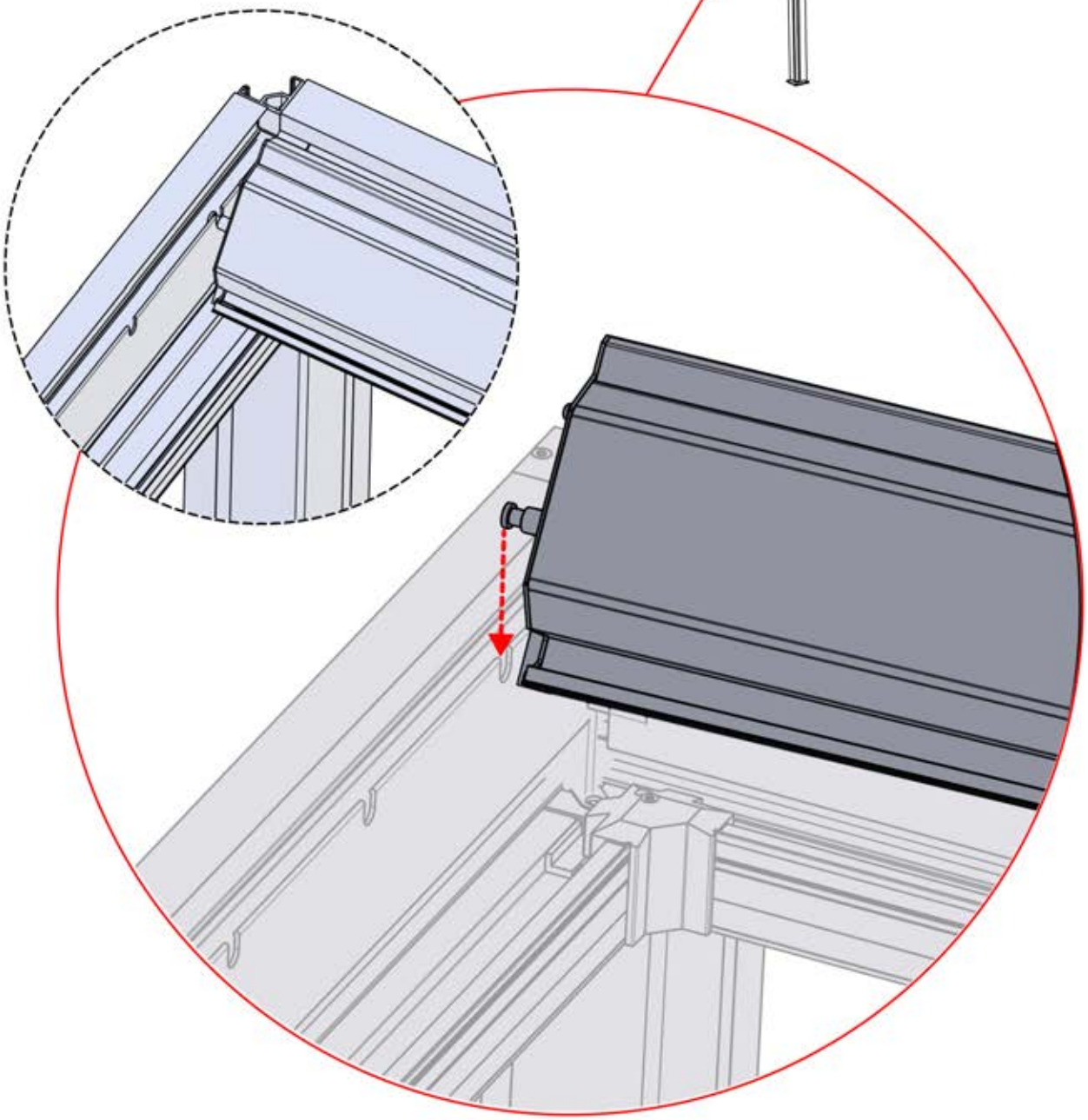

51

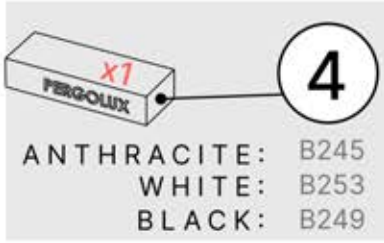

ANTHRACITE: B245
WHITE: B253
BLACK: B249



PN-200003033
1x

PN-20000
3278 Zip Bag



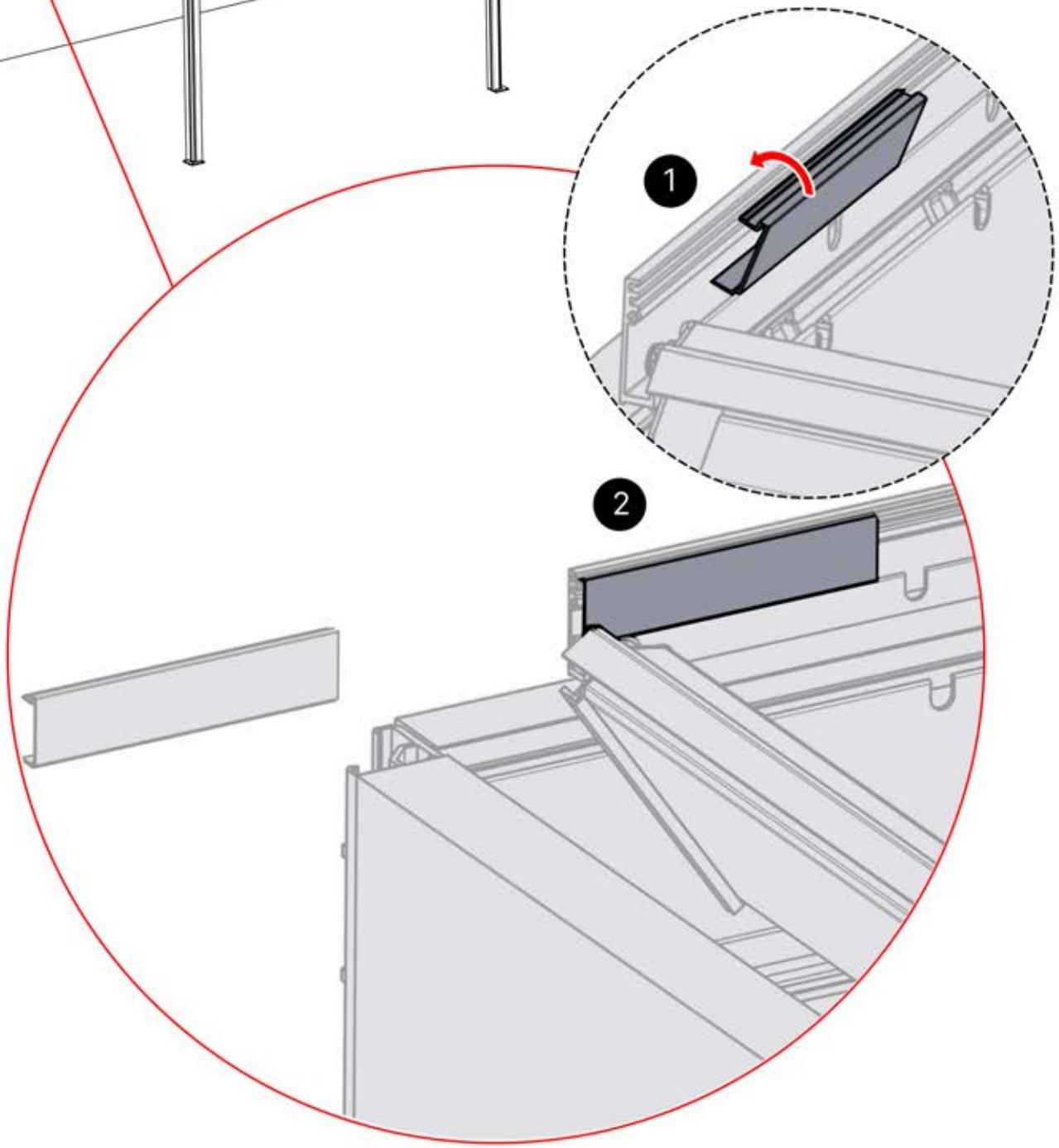

52

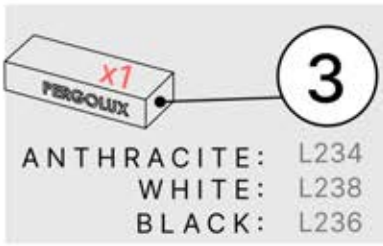

ANTHRACITE: L234
WHITE: L238
BLACK: L236



PN-200002975
1x

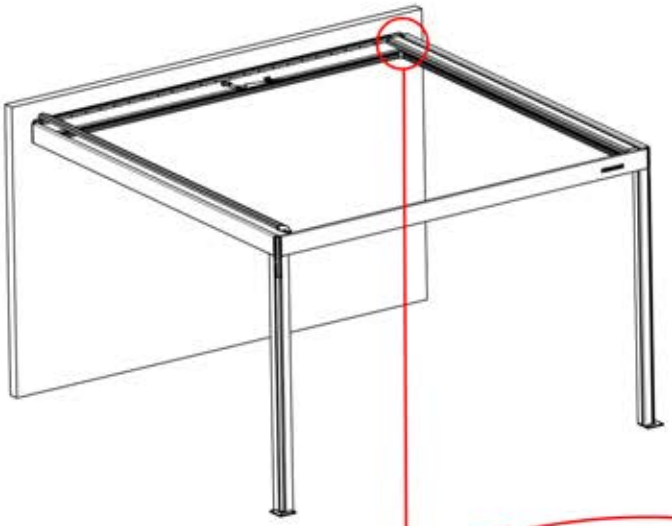

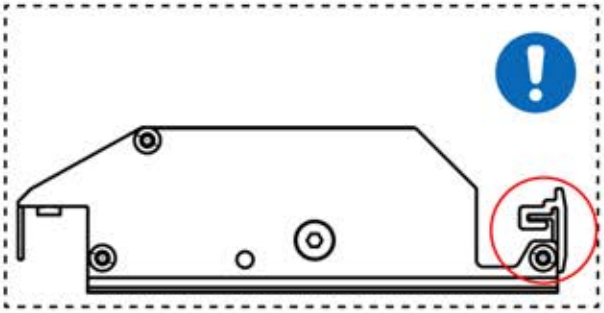

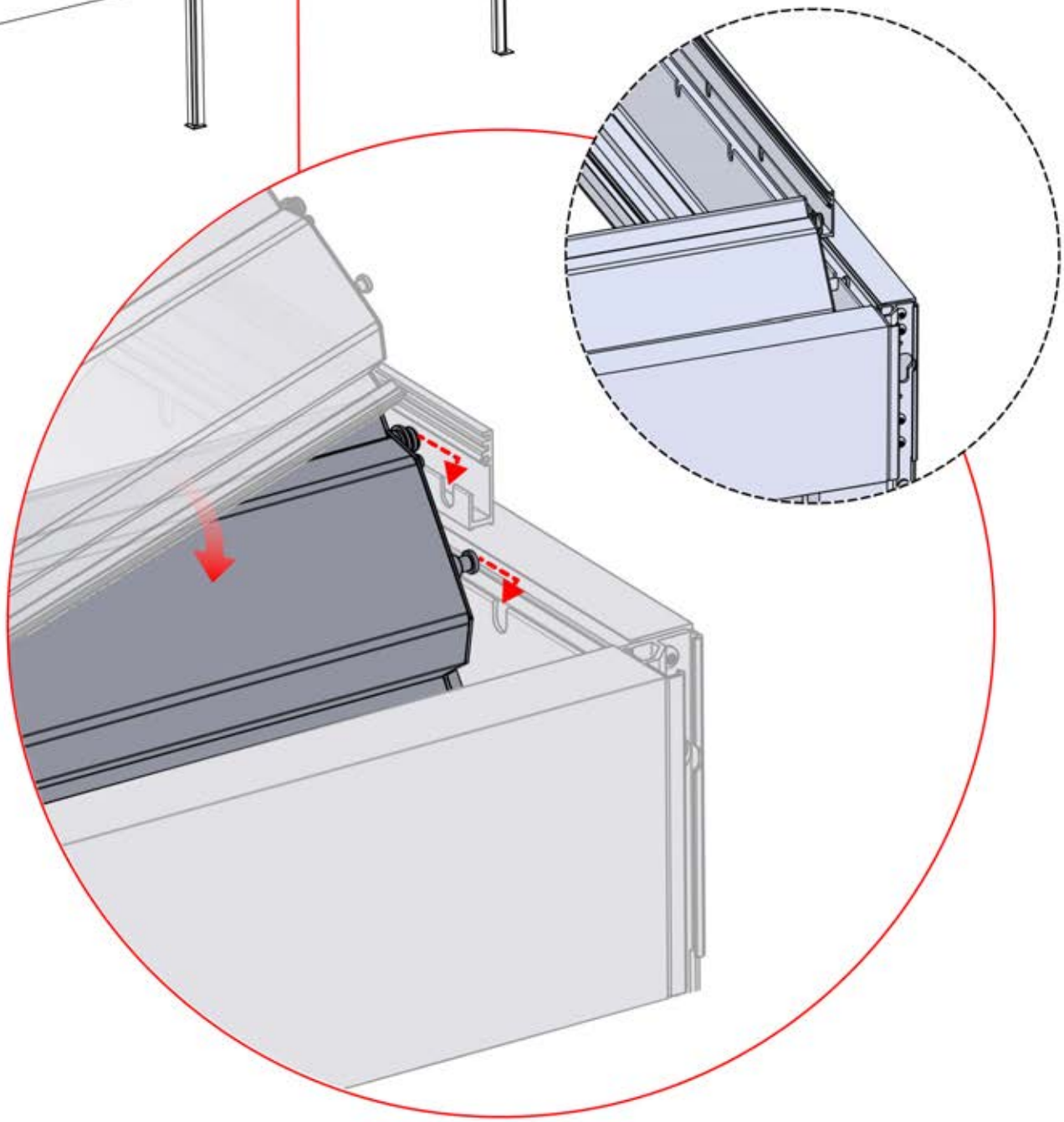

53

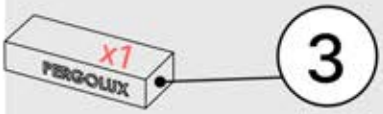

ANTHRACITE: L234
WHITE: L238
BLACK: L236



PN-200002975
1x

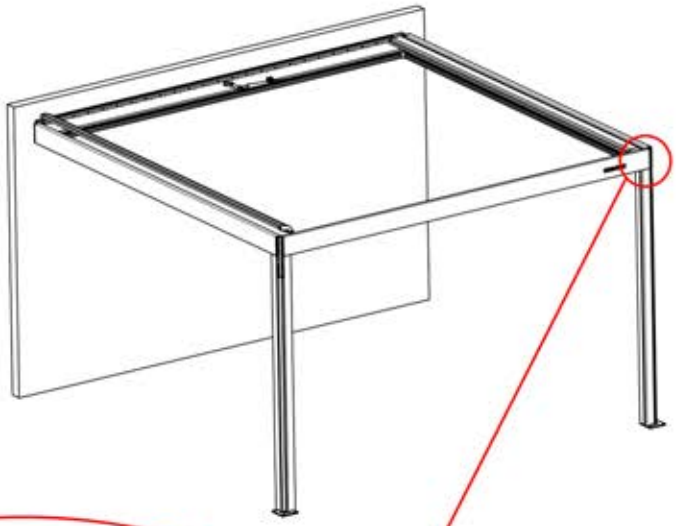

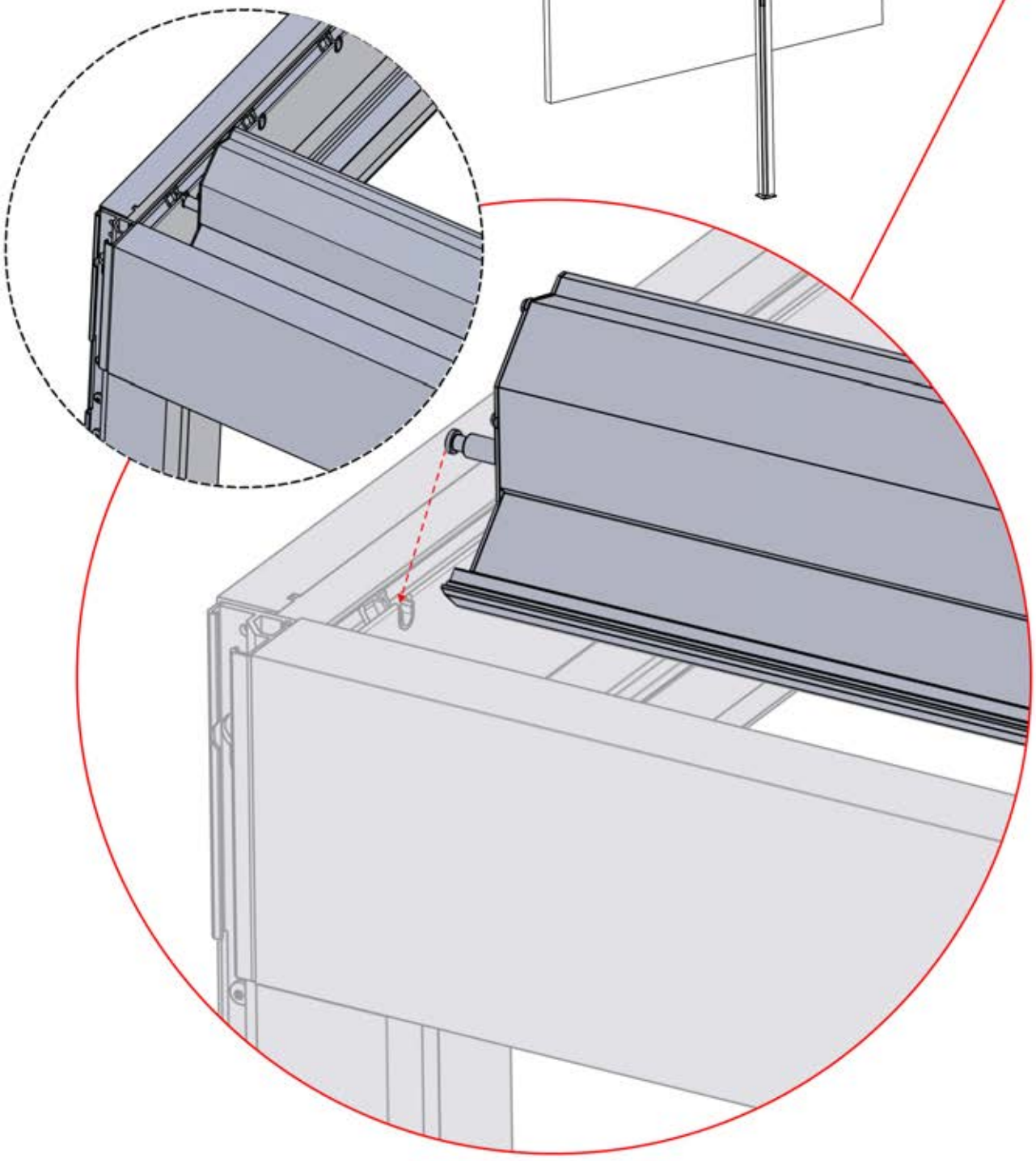

54

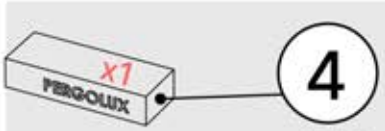

ANTHRACITE: B245
WHITE: B253
BLACK: B249



PN-200003033
1x

PN-20000
3278
Zip Bag

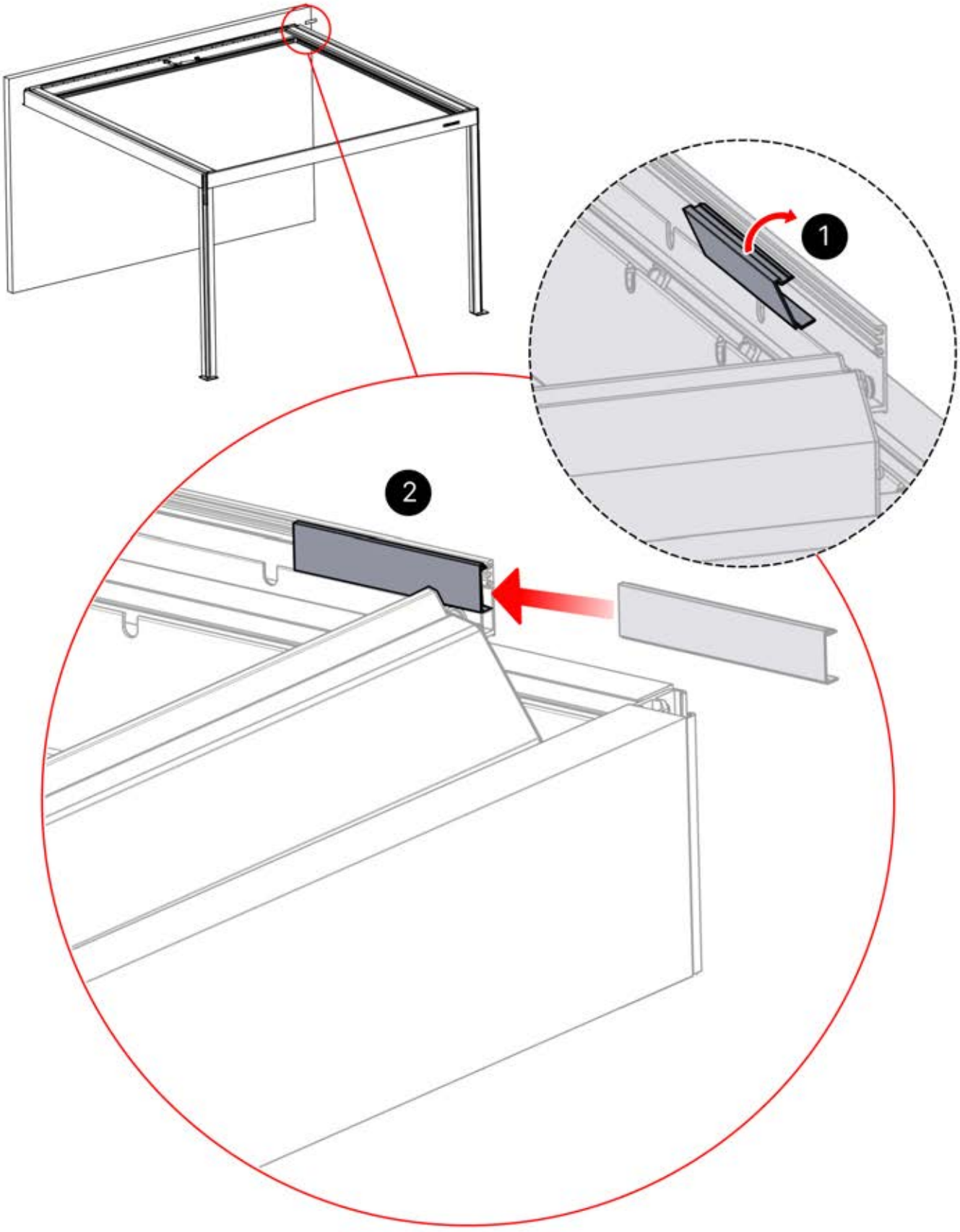

55



3

ANTHRACITE: L234
WHITE: L238
BLACK: L236



2

ANTHRACITE: L222
WHITE: L226
BLACK: L224



PN-200002883

Variable



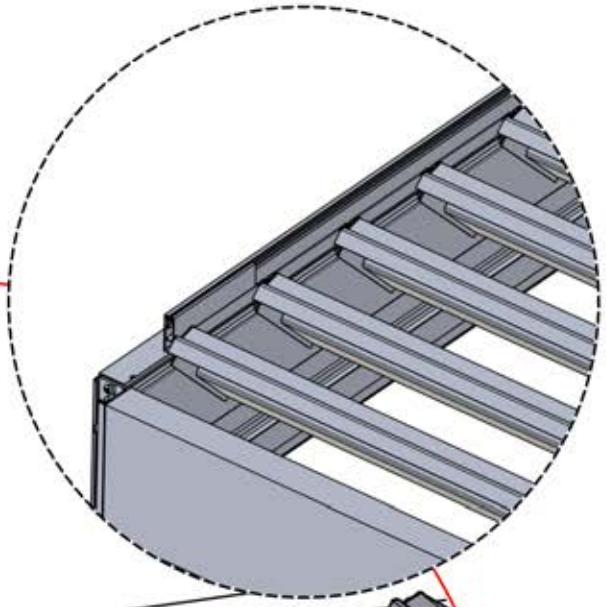

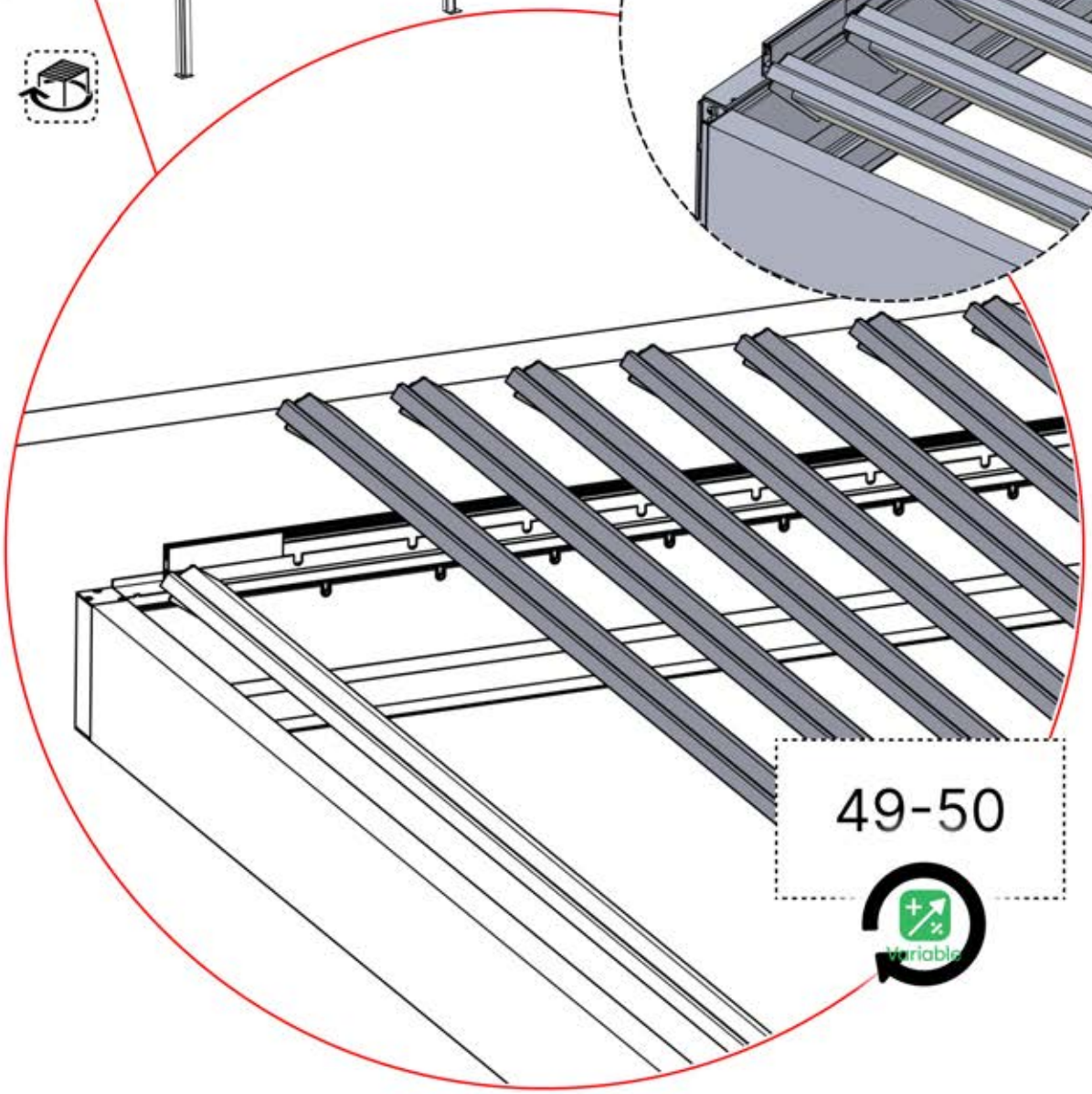

49-50

Variable

56

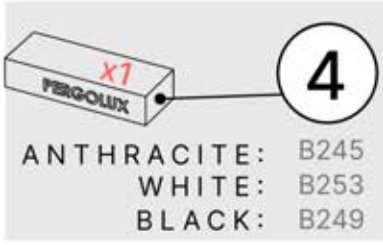

ANTHRACITE: B245
WHITE: B253
BLACK: B249



PN-200002633
1x

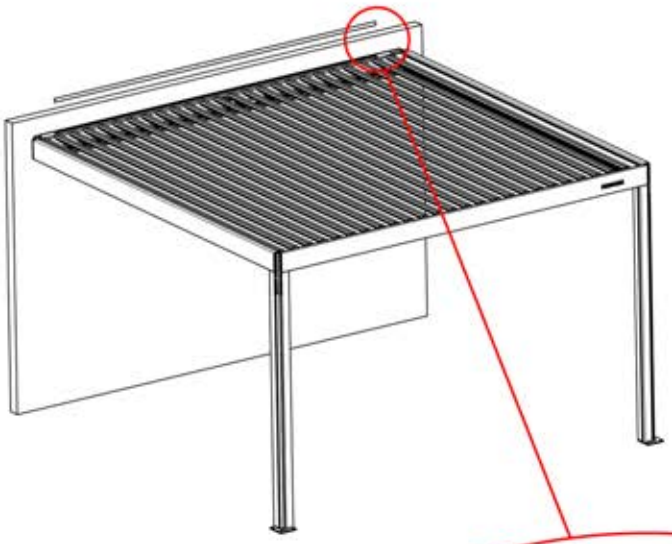

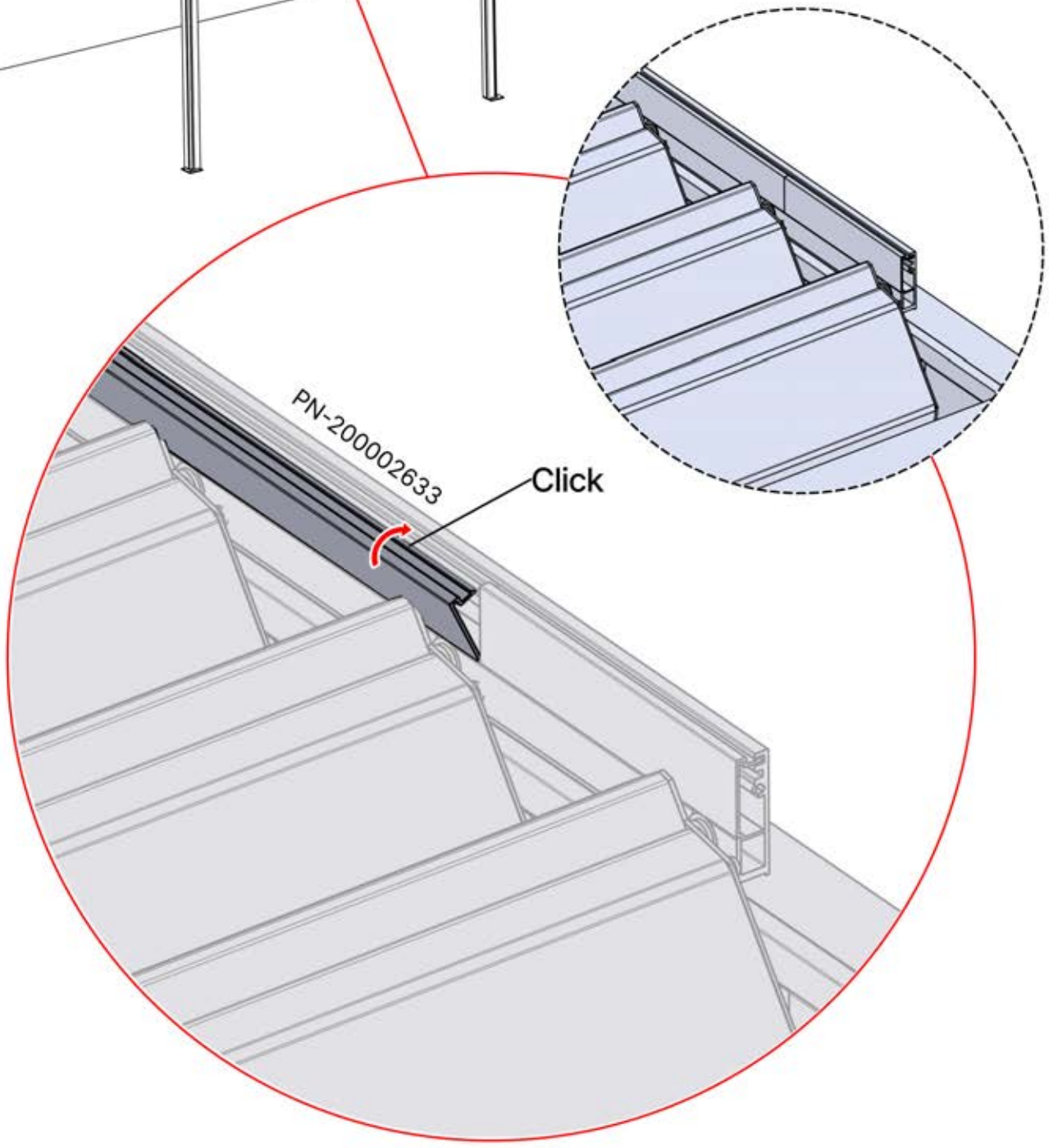

57

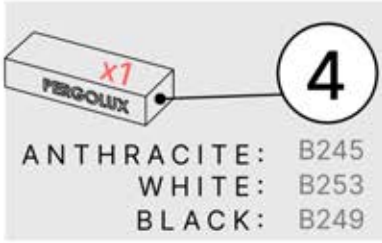

ANTHRACITE: B245
WHITE: B253
BLACK: B249



PN-200003030
1x



PN-200003031
1x



PN-200001207
2x

PN-20000
3278 Zip Bag

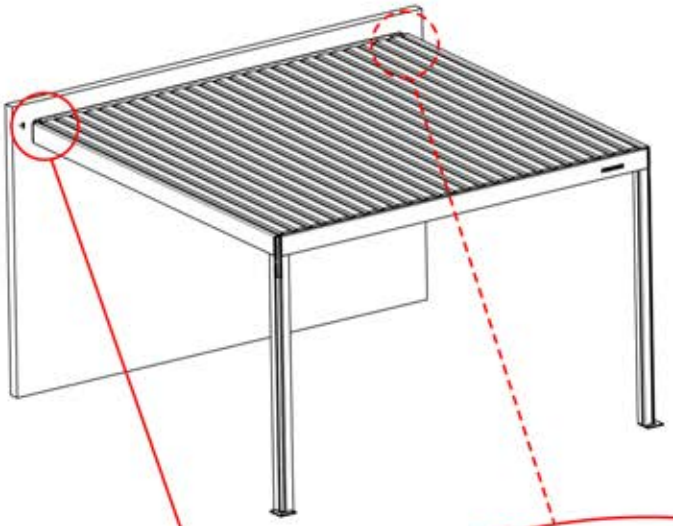

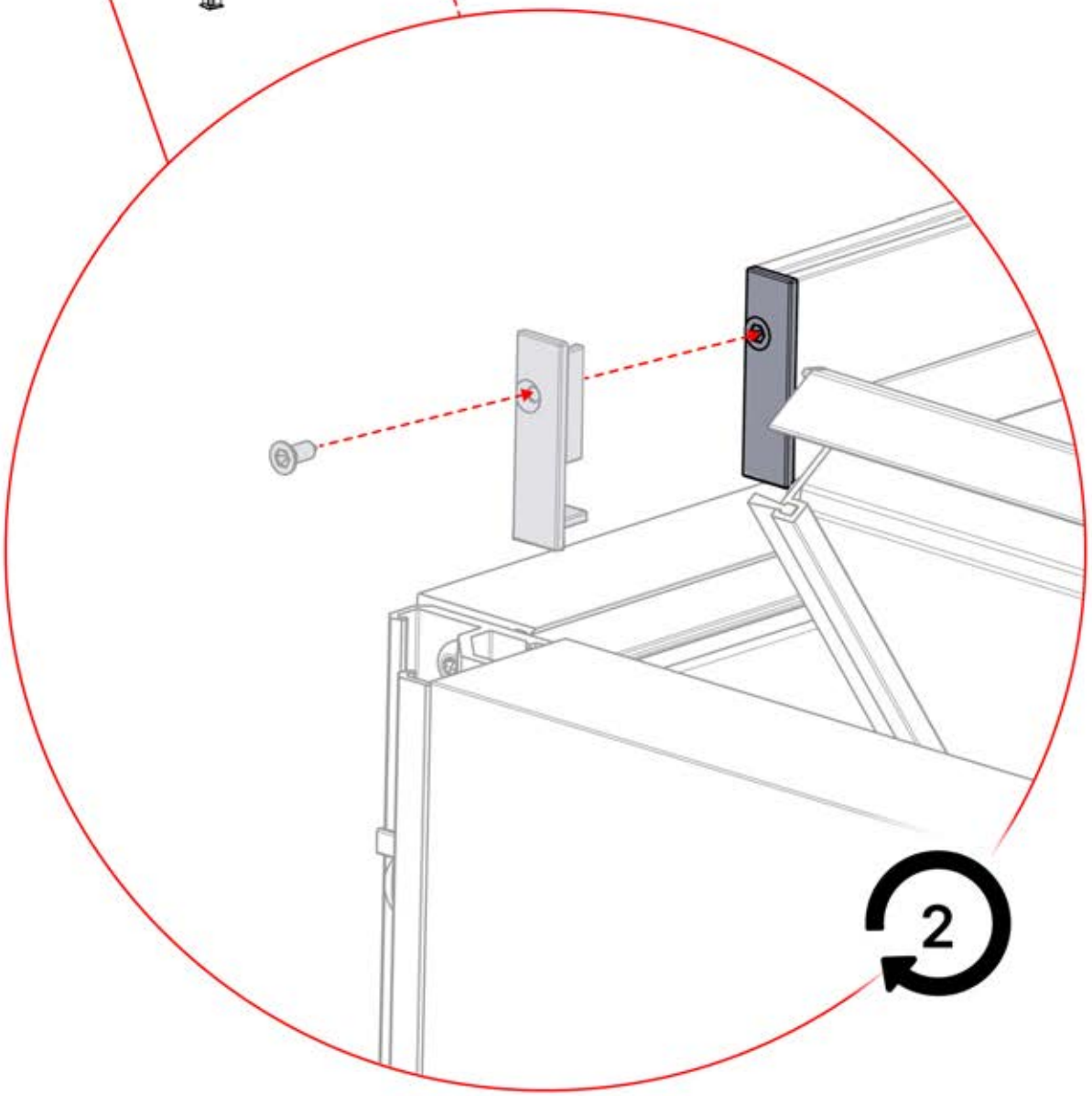

58

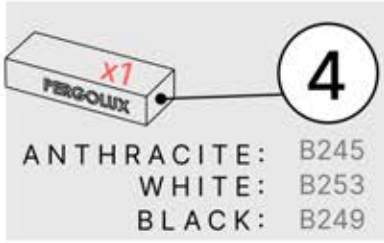

ANTHRACITE: B245
WHITE: B253
BLACK: B249

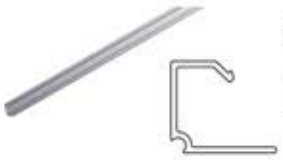

PN-200002609
1x

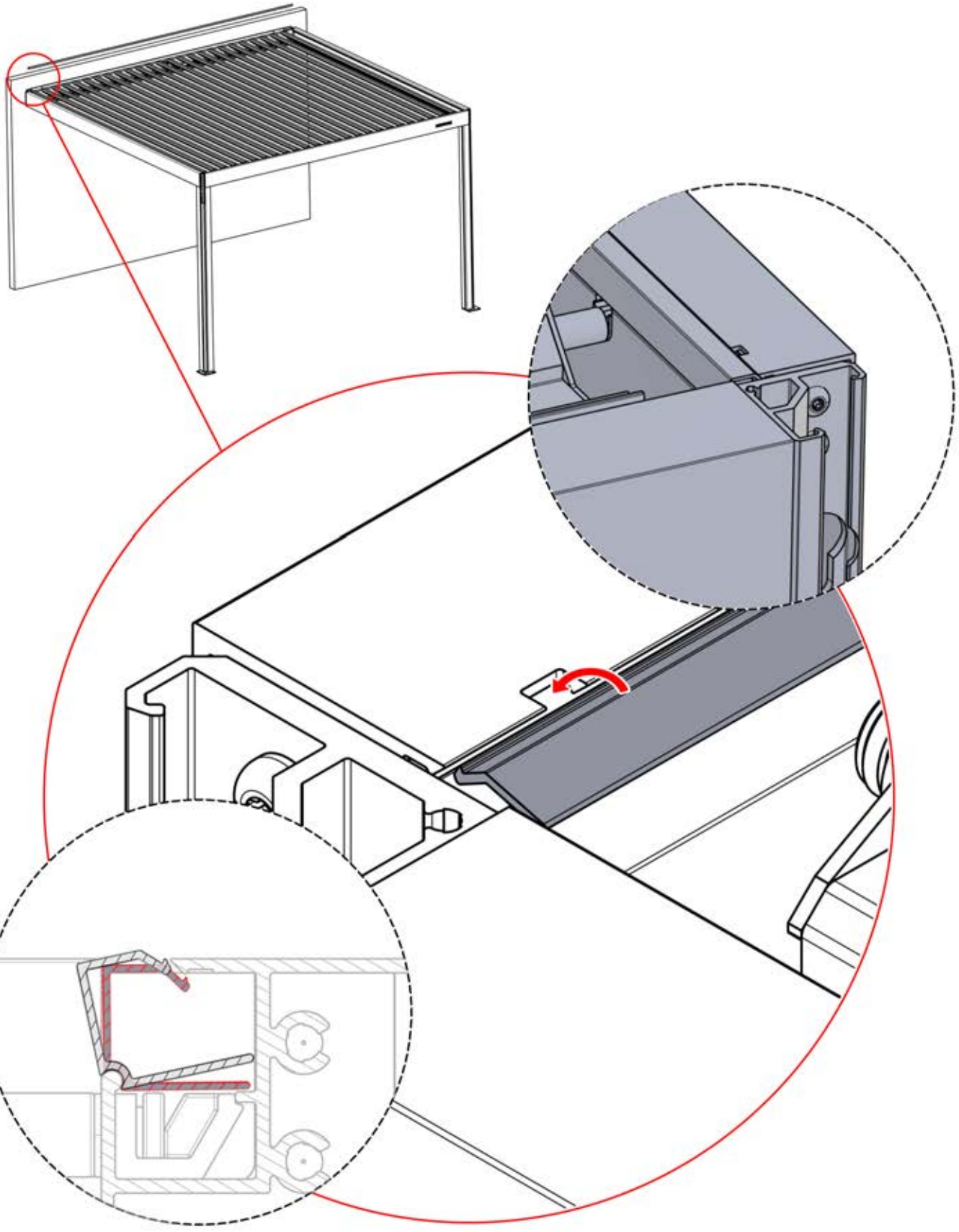

59

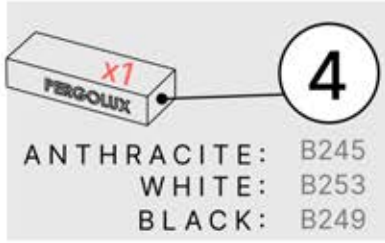

ANTHRACITE: B245
WHITE: B253
BLACK: B249

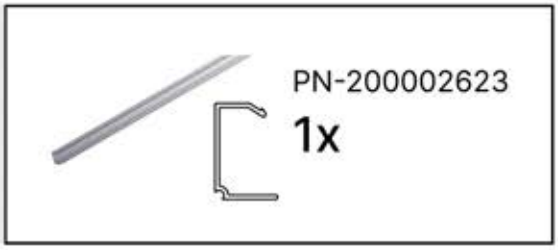

PN-200002623
1x

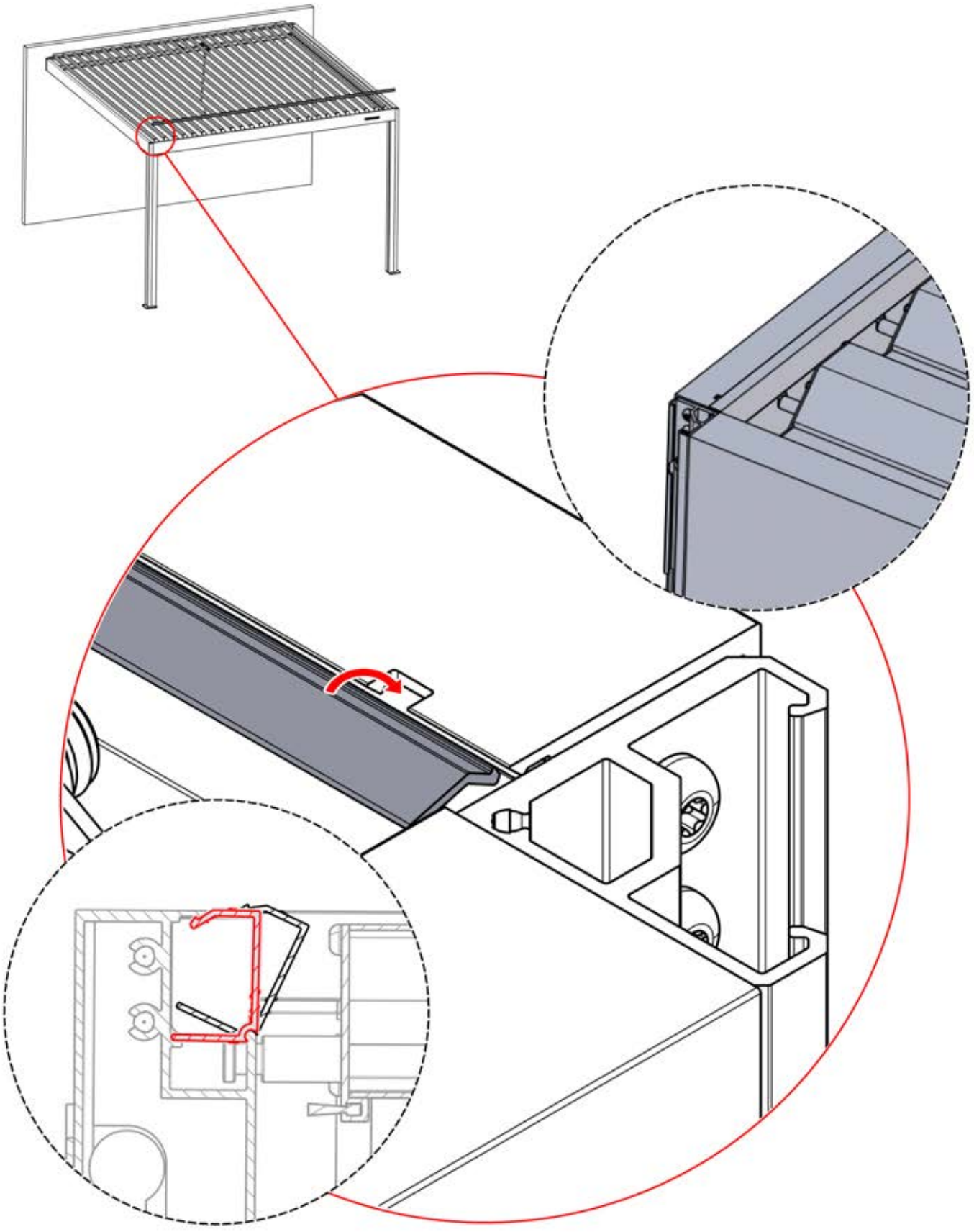

60

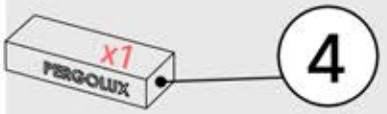

4

ANTHRACITE: B245
WHITE: B253
BLACK: B249

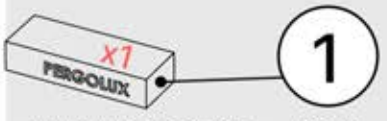

1

ANTHRACITE: C120
WHITE: C122
BLACK: C121



PN-200003386
2x



PN-200003324
2x

PN-20000
3309
Zip Bag



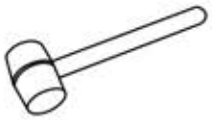



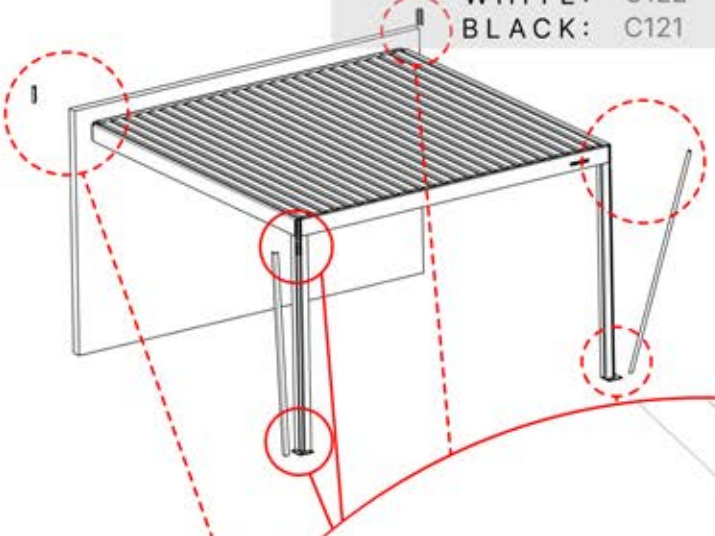

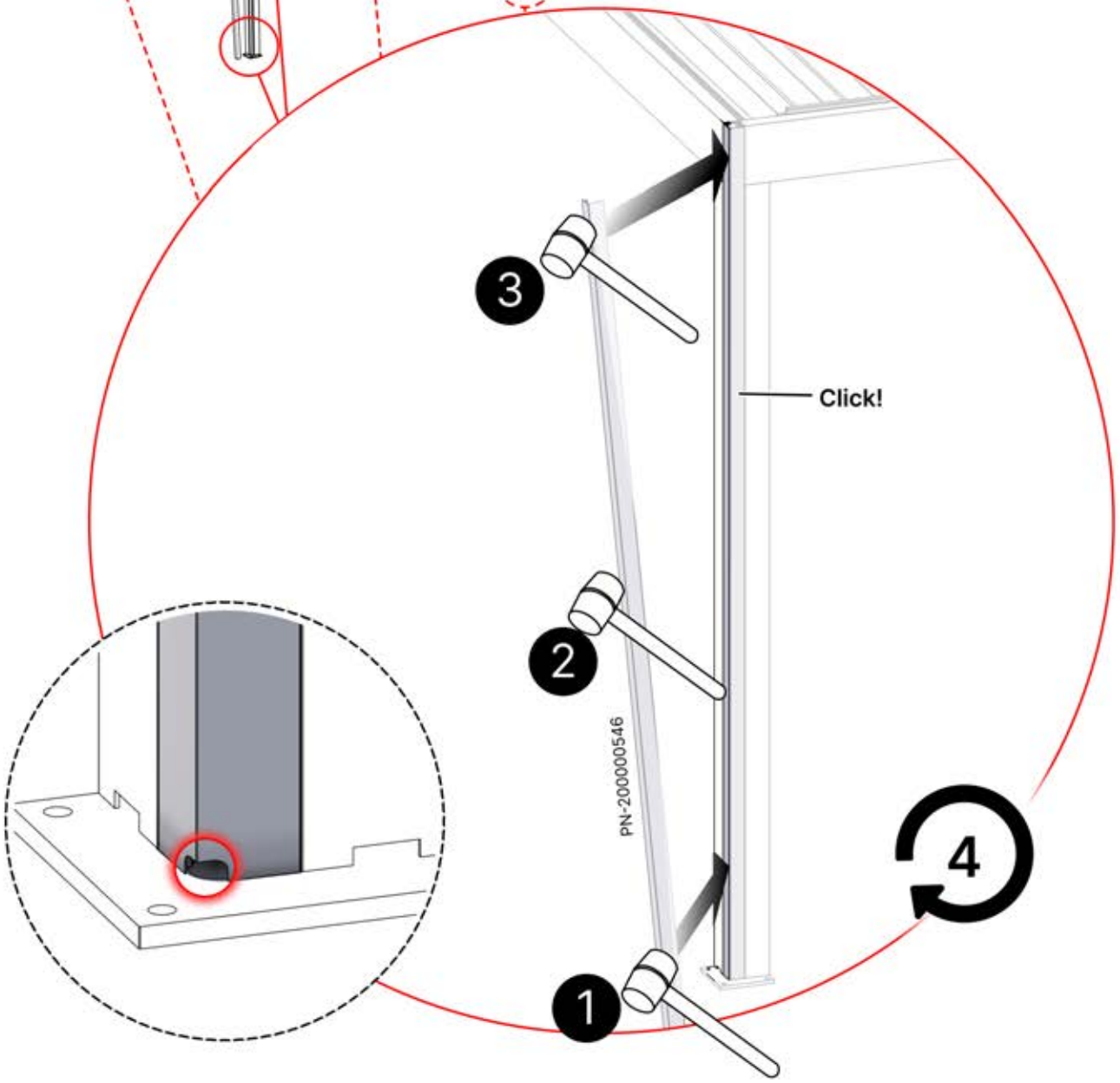

61

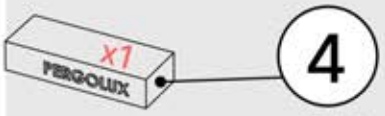

ANTHRACITE: B245
WHITE: B253
BLACK: B249

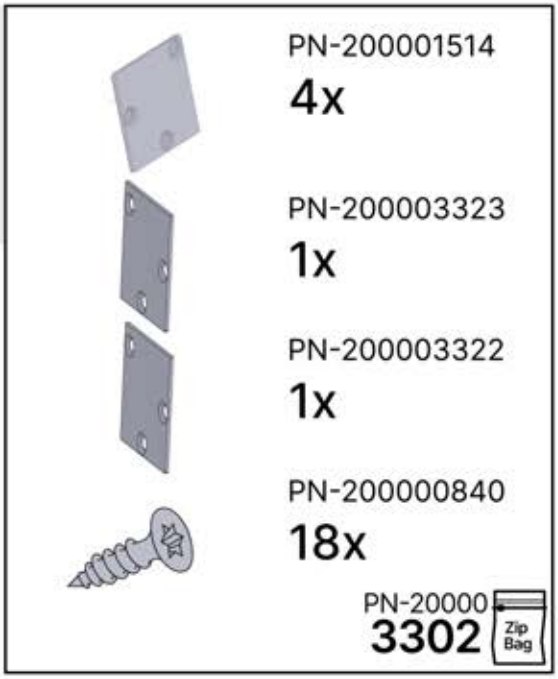

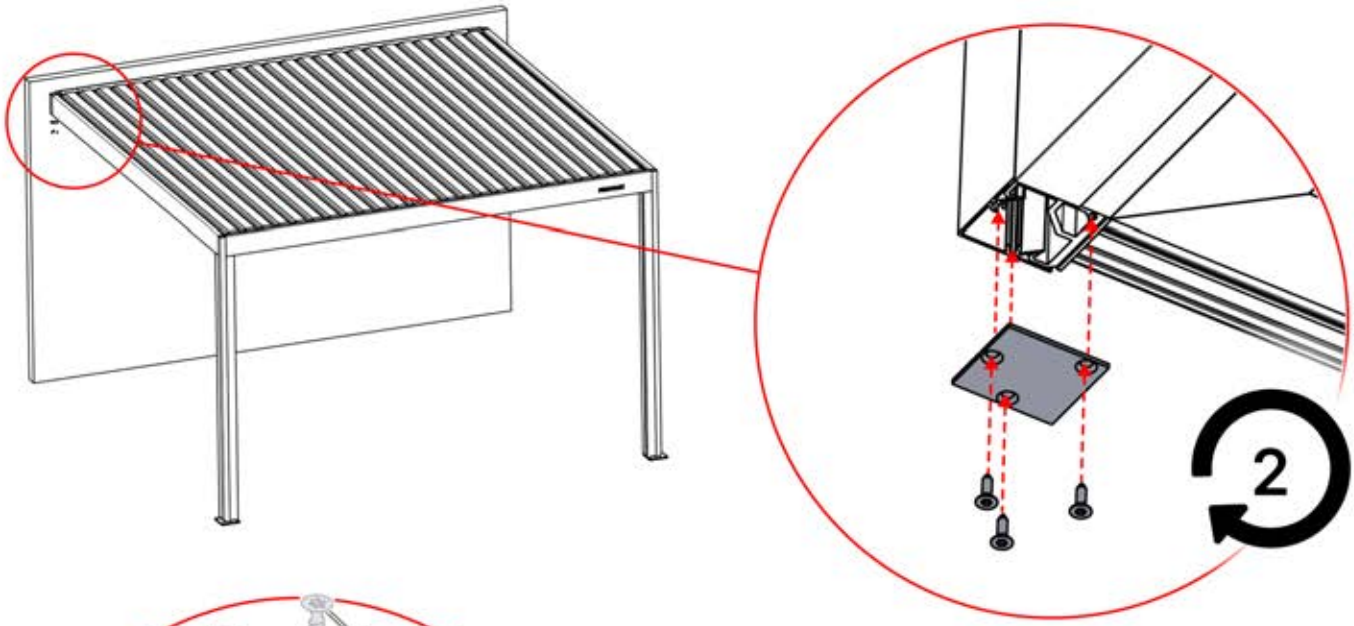

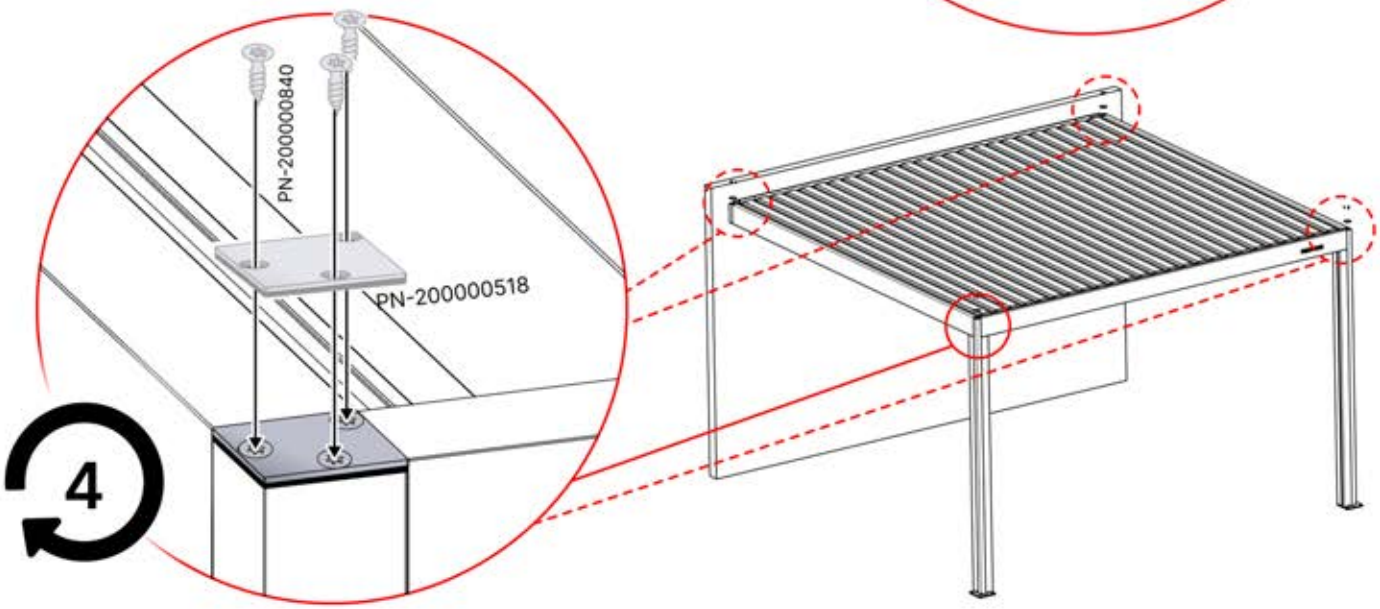

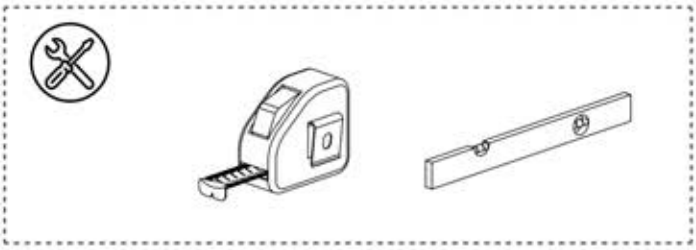

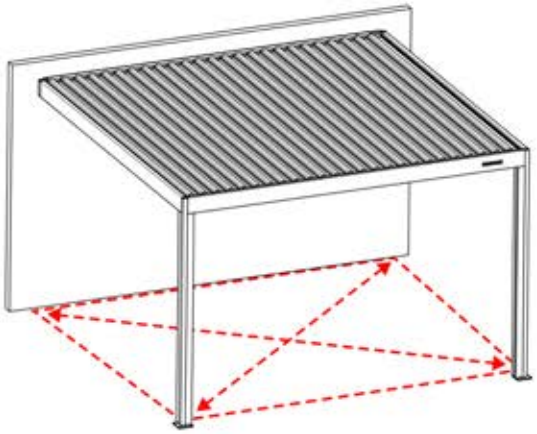

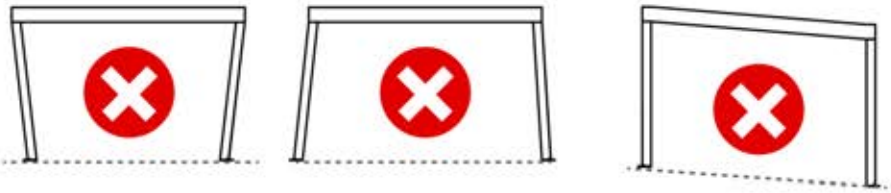

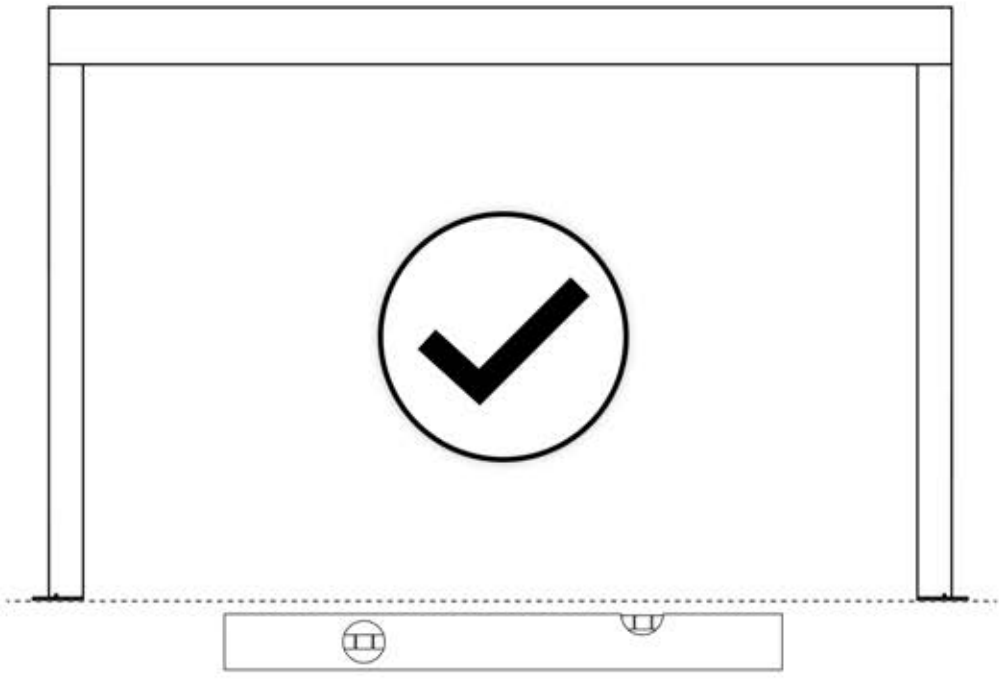

63

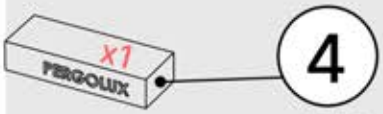

4

ANTHRACITE: B245
WHITE: B253
BLACK: B249

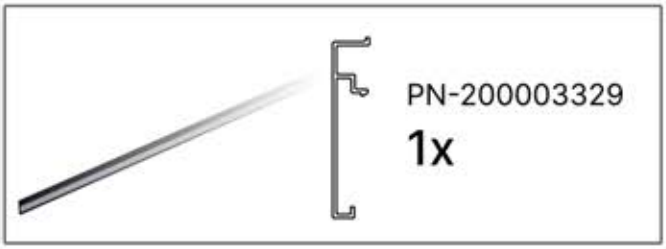

PN-200003329
1x

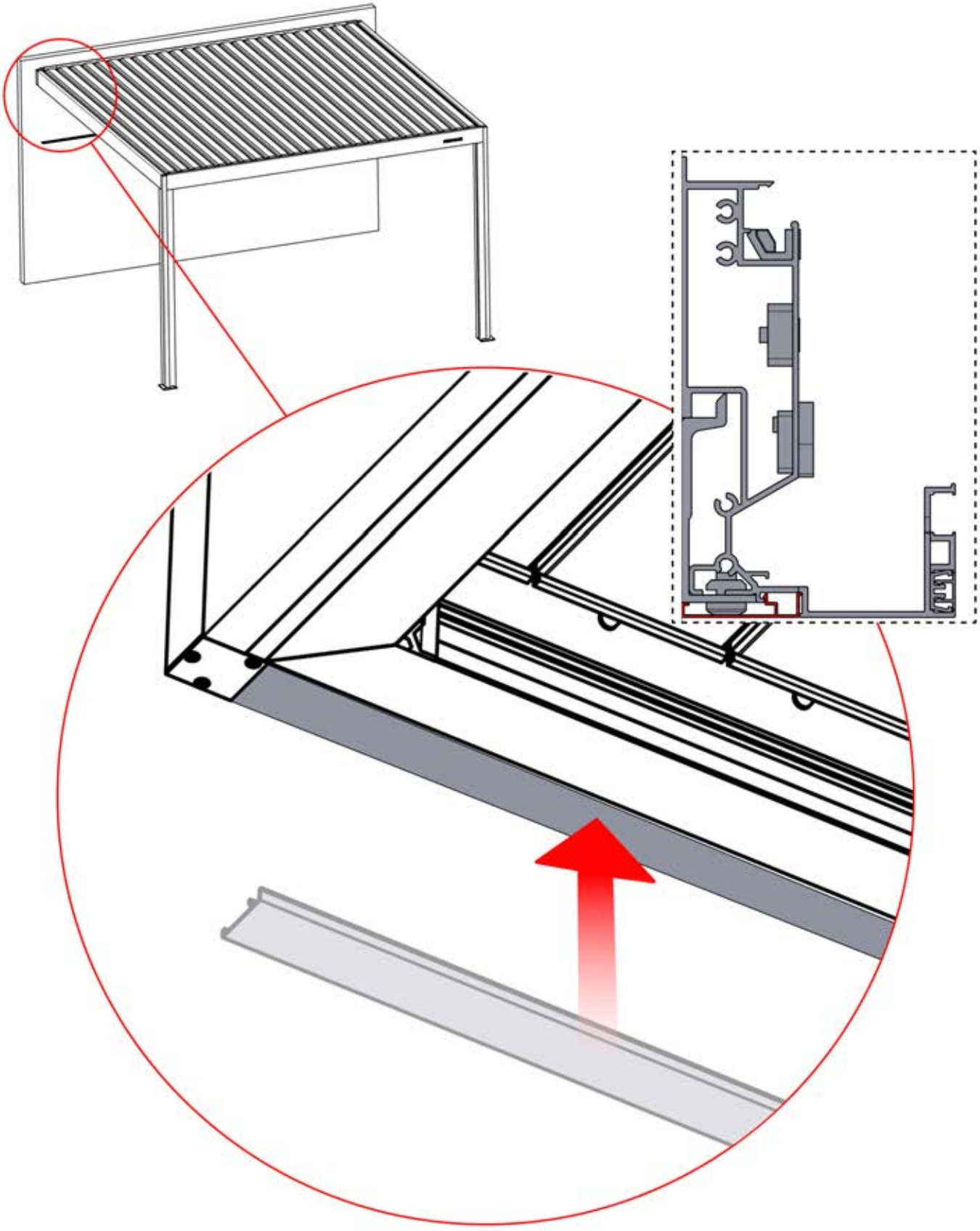

64



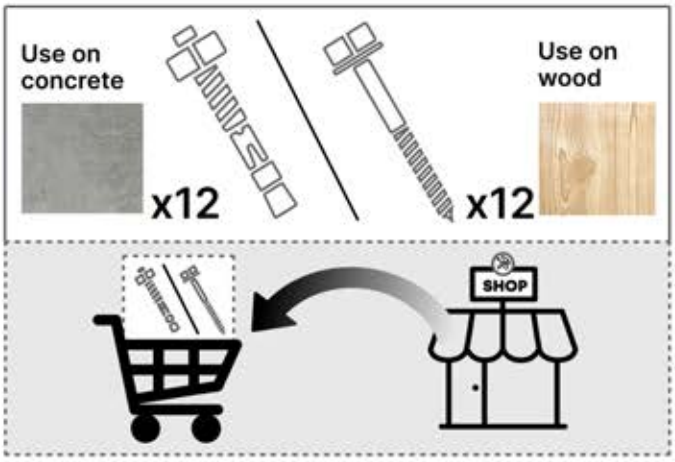

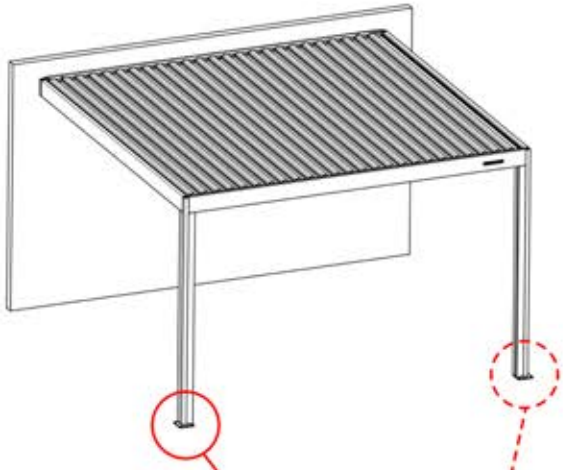

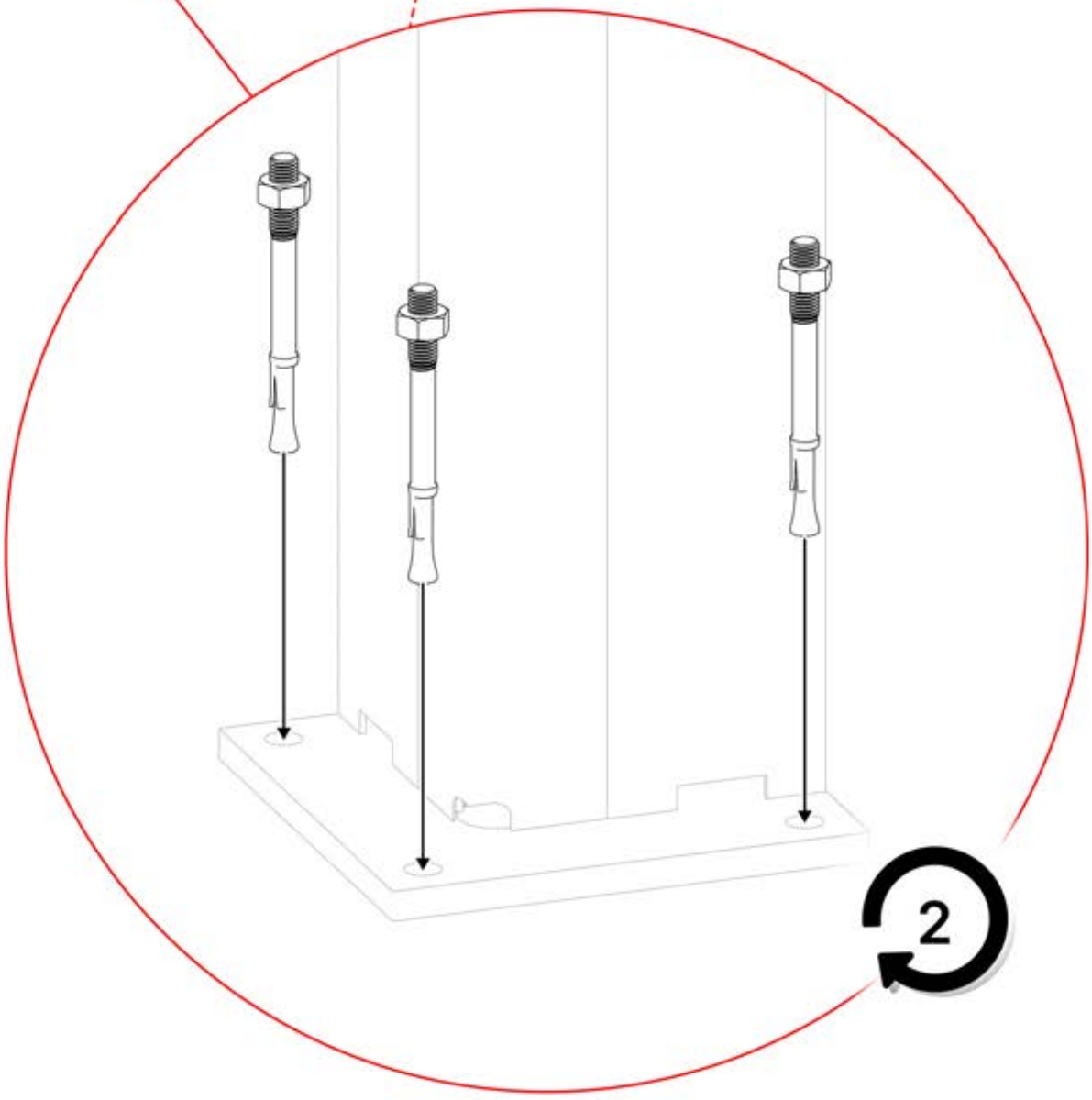

PERGOLUX | CUSTOM DESIGN **S4**

WALL MOUNTED

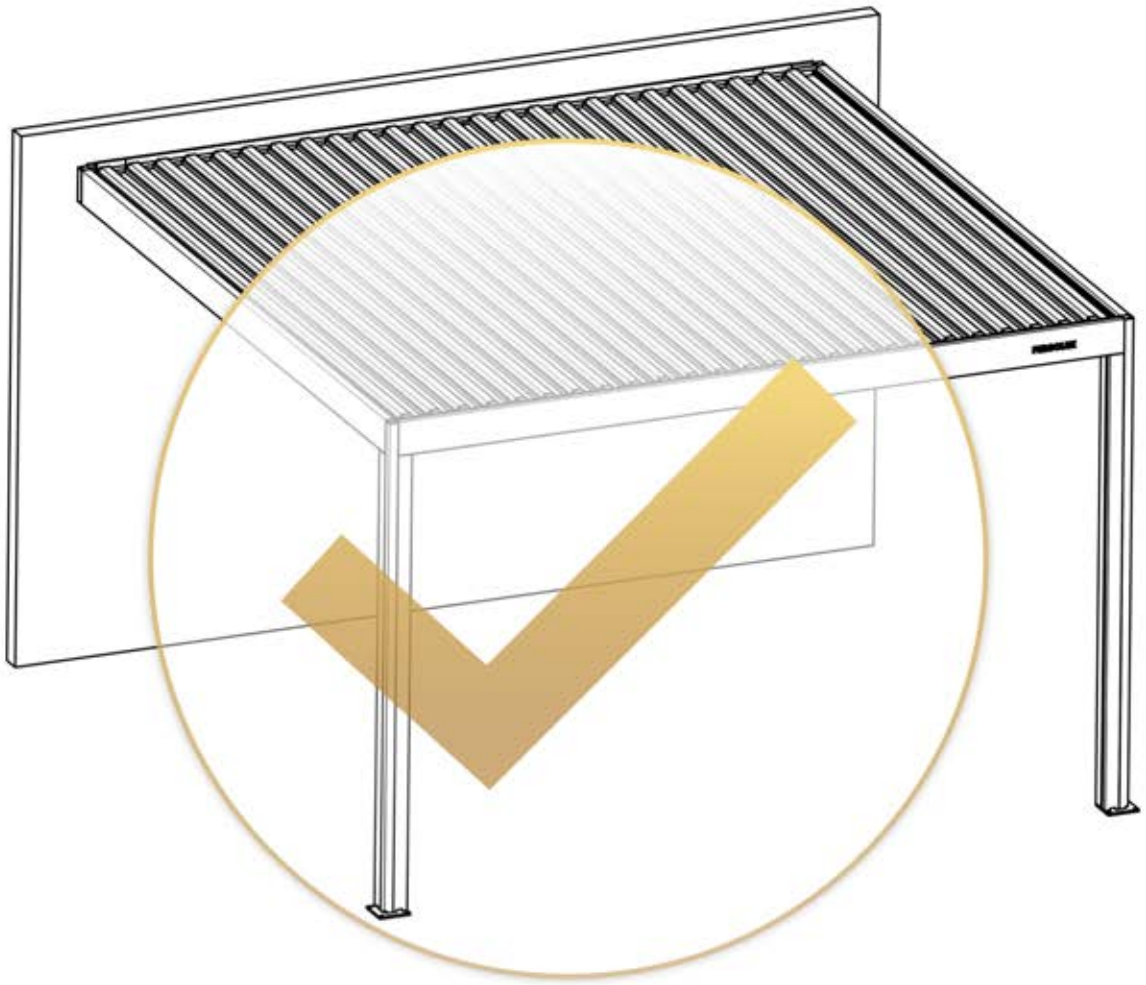

Designed and developed by PERGOLUX

10 Year GUARANTEE

reddot winner 2024

TÜVRheinland CERTIFIED

Type Approved
Regular
Production
Surveillance

www.tuv.com
ID 1111317678