THE TRADE GROUP®

Pronto Kit 455

Inline 20x20 Exhibit

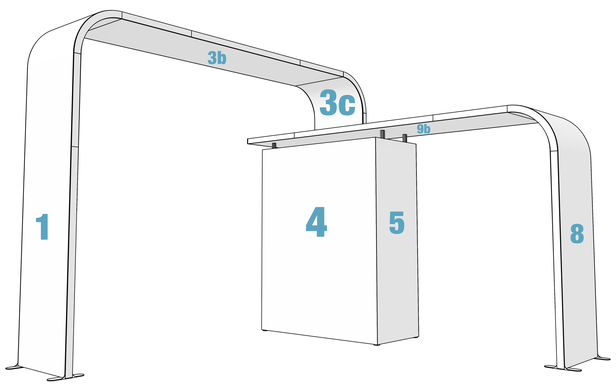

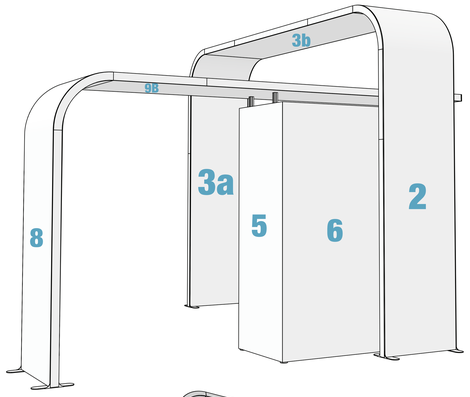

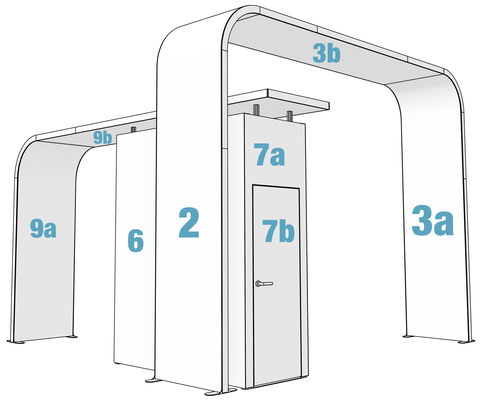

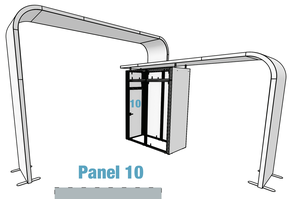

General Art Guidelines

- CMYK Color Mode
- Resolution must be 100 - 125 dpi
- All Solid Coated Pantone colors should be called out as spot colors
- Embed all images and send linked files
- Do not scale artboard
- Background color/images must bleed to the edge of artboards
- All fonts must be created to outlines
- Design template to actual print size

Print Area

Finished Print Area

Total Print Area (with bleed)

Frame/Post Seams (will not be seen - just for structural purposes)

Obstructions

Monitors

Shelves

"Floating" workstation

Other

Template at 25%

Panel 3b

Total Print Area: 41.37" w x 161.0" h
Finished Size Area: 39.37" w x 157.5" h

Panel 10

Back of door panel
Finished Size Area: 29.5" w x 79.38" h

Unprinted backer panel

Panel 9b

Total Print Area: 43.37" w x 176.44" h
Finished Size Area: 39.37" w x 172.44" h

Panel 1

Total Print Area: 43.37" w x 173.07" h
Finished Size Area: 39.37" w x 169.07" h

Curved Surface

Panel 3a

Total Print Area: 43.37" w x 168" h
Finished Size Area: 39.37" w x 164" h

Curved Surface

Panel 3c

Total Print Area: 43.37" w x 168" h
Finished Size Area: 39.37" w x 164" h

Curved Surface

Obstructed by Closet

Panel 2

Total Print Area: 43.37" w x 173.07" h
Finished Size Area: 39.37" w x 169.07" h

Curved Surface

Panel 7a

Total Print Area: 43.37" w x 112.88" h
Finished Size Area: 39.37" w x 108.88" h

Door Panel
Finished Size Area: 35.8" w x 79.38" h

Panel 7b

Panel 4

Total Print Area: 89.04" w x 112.88" h
Finished Size Area: 85.04" w x 108.88" h

Panel 5

Total Print Area: 43.37" w x 112.88" h
Finished Size Area: 39.37" w x 108.88" h

Panel 6

Total Print Area: 89.04" w x 112.88" h
Finished Size Area: 85.04" w x 108.88" h

Obstructed by Panel 5

Panel 8

Total Print Area: 43.37" w x 133.7" h
Finished Size Area: 39.37" w x 129.7" h

Curved Surface

Panel 9a

Total Print Area: 43.37" w x 128.37" h
Finished Size Area: 39.37" w x 124.37" h

Curved Surface

Inside "arch" faces

Panel 3a

Panel 3b

Panel 3c

Curved Surface

Curved Surface

Underside "arch" faces

Panel 9b

Panel 9a

Curved Surface