Part Number	Stages	Tonne/Stage	L1 Closed Centres	Stroke	Open Centres	L4	S1 Stage OD	S2 Stage OD	S3 Stage OD	S4 Stage OD	S5 Stage OD	AØ	BØ	CØ	D	E	F	G	H	H*	I (BSP)	Oil Capacity (Litres)
Bottom Mounted Cylinders																						
D920/A	2	5 - 3	399	620	1019	70	60	45	•	•	•	80	43	26	40	40	100	180	30	25	1/2"	1.6
D909/A	3	8 - 5 - 3	399	910	1309	61	75	60	45	•	•	92	42	26	35	40	118	198	22	25	1/2"	3.4
D917/A	3	8 - 5 - 3	473	1057	1530	36	75	60	45	•	•	92	42	26	35	40	118	198	22	25	1/2"	3.6
D918/A	4	12 - 8 - 5 - 3	417	1180	1597	36	90	75	60	45	•	110	42	26	33	45	133	223	22	25	1/2"	5.6
D919/A	5	16 - 12 - 8 - 5 - 3	417	1467.5	1884.5	36	105	90	75	60	45	125	42	26	33	45	150	240	22	25	1/2"	8.6
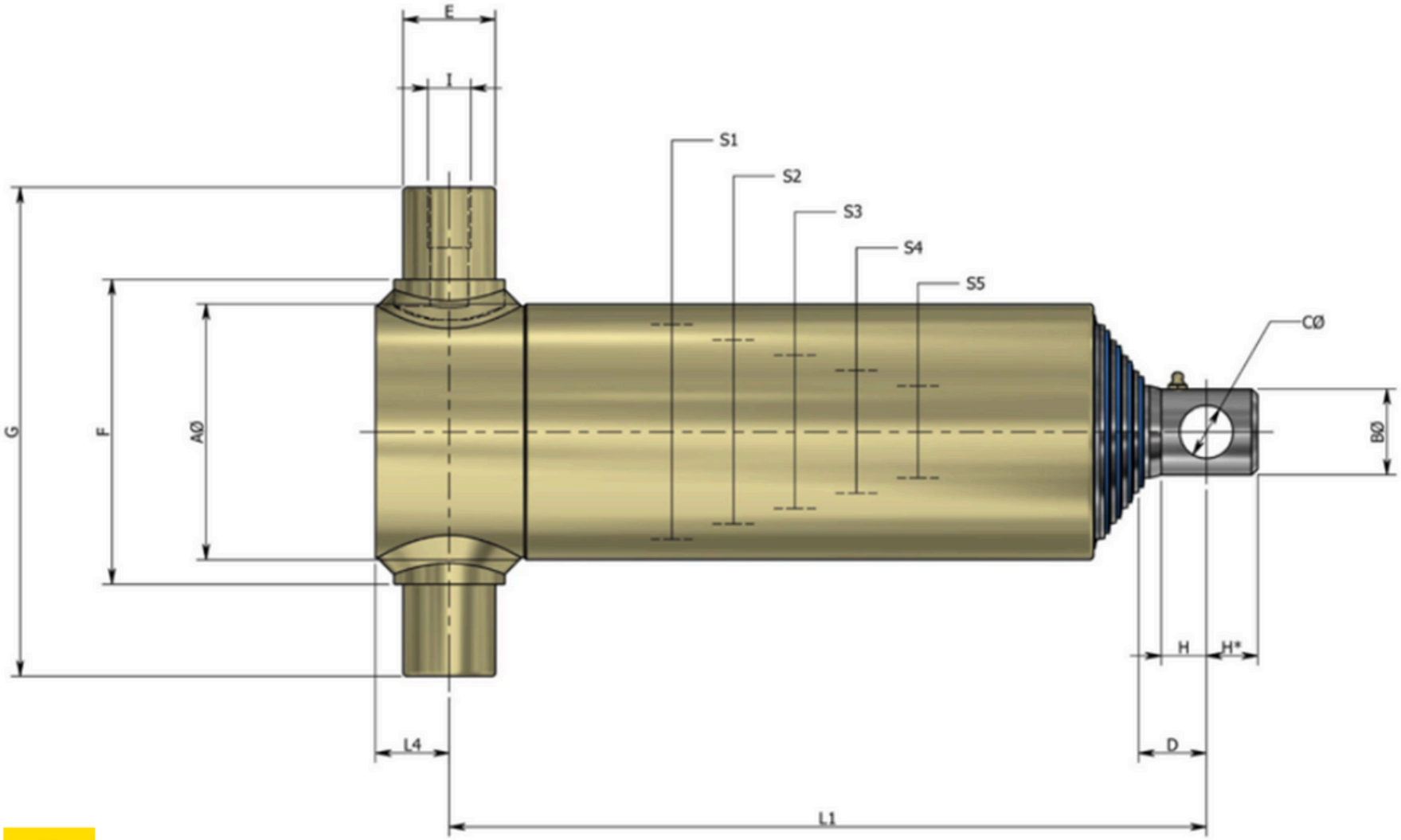
CØ = Pin Diameter