GENERAL WATER UTILITY NOTES:

1. ALL CONSTRUCTION TO BE IN STRICT ACCORDANCE WITH SPALDING COUNTY WATER AND SEWERAGE FACILITIES AUTHORITY (**SCWSFA**) SPECIFICATIONS.
2. AS-BUILT DRAWINGS AND MAINTENANCE BOND(S) MUST BE SUBMITTED AND ARE REQUIRED PRIOR TO INSPECTION AND ACCEPTANCE. AS-BUILTS SHALL BE SUBMITTED IN ACCORDANCE WITH **SCWSFA** STANDARDS.
3. ALL MATERIALS TO CONFORM TO **SCWSFA** SPECIFICATIONS. THE CONTRACTOR SHALL PROVIDE **SCWSFA** SUBMITTALS ON ALL PROPOSED MATERIALS FOR APPROVAL. ANY WORK DONE BY THE CONTRACTOR SHALL BE AT HIS OWN RISK UNTIL REVIEW AND APPROVAL OF THESE SUBMITTALS ARE COMPLETE.
4. THE CONTRACTOR SHALL NOTIFY **SCWSFA** 48 HOURS PRIOR TO CONSTRUCTION TO SCHEDULE A PRE-CONSTRUCTION CONFERENCE.
5. NOTIFY **SCWSFA** 48 HOURS PRIOR TO TAPPING ANY EXISTING WATER MAIN. **SCWSFA** REPRESENTATIVE SHALL BE ON-SITE DURING TIE-IN. TAP COUPON TO BE PROVIDED TO THE **SCWSFA** REPRESENTATIVE ON-SITE.
6. THE CONTRACTOR SHALL SCHEDULE AN INSPECTION BY **SCWSFA** WATER DISTRIBUTION SUPERVISOR BEFORE ANY WORK IS HIDDEN FROM VIEW. A MINIMUM OF 48-HOUR NOTICE IS REQUIRED FOR SCHEDULED INSPECTIONS.
7. THE CONTRACTOR IS RESPONSIBLE FOR NOTIFYING ALL UTILITIES BEFORE CONSTRUCTION AND VERIFYING THE LOCATIONS OF ALL UTILITIES SHOWN OR NOT SHOWN.
8. ALL UTILITIES WITHIN THE PUBLIC RIGHT-OF-WAY REQUIRING RELOCATION OR ADJUSTMENT IN ORDER TO ACCOMMODATE PROPOSED IMPROVEMENT SHALL BE RELOCATED OR ADJUSTED AT THE EXPENSE OF THE CONTRACTOR.
9. IT SHALL BE THE CONTRACTORS RESPONSIBILITY TO NOTIFY AND COORDINATE HIS WORK WITH EXISTING UTILITIES WHICH MAY CONFLICT WITH HIS WORK. CONTRACTOR SHALL PROTECT AND MAINTAIN SUCH UTILITIES SHOWN OR NOT SHOWN ON THE PLANS.
10. ALL VALVE BOXES ARE TO HAVE COLLARS AND VALVE MARKERS AS REQUIRED BY **SCWSFA**. ALL CONCRETE COLLARS SHALL BE A MINIMUM 24" DIAMETER AND 6" THICK.
11. MINIMUM HORIZONTAL AND VERTICAL DISTANCES BETWEEN WATER LINES AND SANITARY SEWER SHALL BE 10 FEET HORIZONTAL AND 24 INCHES VERTICAL. DISTANCES SHALL BE MEASURED FROM EDGE TO EDGE. BOTH MAINS SHALL BE DIP AND AT CROSSING ONE FULL LENGTH OF WATER PIPE SHALL BE LOCATED SO THAT BOTH JOINTS ARE AS FAR FROM THE SANITARY SEWER AS POSSIBLE.
12. WATER LINES SHALL HAVE A MINIMUM COVER OF 4 FEET FROM FINISHED GRADE OR 3 FEET BELOW DRAINAGE DITCH PARALLELING THE ROAD, WHICHEVER IS DEEPEST.
13. WHERE VALVE MARKERS ARE NOT USED ALL VALVES SHALL BE MARKED WITH A 2-INCH x 4-INCH "V" ON THE CURB AND PAINTED BLUE.
14. ALL BLOCKING BEHIND FITTINGS TO BE AGAINST UNDISTURBED SOIL.
15. ALL WATER MAINS SHALL BE DUCTILE IRON PIPE (DIP).
16. ALL WATER MAIN CROSSING UNDER PAVEMENT SHALL BE DIP ENCASED IN STEEL CASING WITH CASING SPACERS AND FIELD LOCK GASKETS PER **SCWSFA** SPECIFICATIONS.
17. ALL SERVICE LINES CROSSING UNDER PAVEMENT SHALL BE ENCASED IN 2" SCHEDULE 80 PVC OR OTHER CONDUIT MATERIAL AS APPROVED BY **SCWSFA**.
18. ALL VALVES AND FITTINGS ARE TO BE RESTRAINED WITH APPROPRIATE TYPE AND NUMBER OF "EBAA IRON" OR "UNI-FLANGE"PIPE RESTRAINT SYSTEM ACCESSORIES IN A MANNER APPROVED BY **SCWSFA** PRIOR TO CONSTRUCTION. ANY CONCRETE BLOCKING THAT IS ALLOWED SHALL BE POURED AGAINST UNDISTURBED EARTH.
19. THE MINIMUM WATER TAP ALLOWED BY THE **SCWSFA** IS ¾". WHERE ONE TAP IS TO SERVE TWO HOMES, A MINIMUM OF 1" TAP IS REQUIRED.
20. ALL WATER SERVICE CONNECTIONS SHALL BE MARKED WITH A 2-INCH x 4-INCH "W" SAW NOTCH AT SERVICE LOCATIONS ON THE CURB AND PAINTED BLUE. THE LOCATION OF FUTURE WATER METERS SHALL BE TEMPORARILY MARKED WITH A 2" PVC PIPE PAINTED BLUE. THIS LOCATION INDICATOR SHALL EXTEND A MINIMUM OF 24" ABOVE EXISTING GRADE.
21. DUCTILE IRON PIPE IS REQUIRED GOING "IN TO" AND "OUT OF" ALL FITTINGS.
22. BOTH TRACER WIRE AND METALLIC UNDERGROUND MARKING TAPE WILL BE REQUIRED FOR ALL AREAS. A TRACER WIRE TERMINAL POST SHALL BE REQUIRED ON ANY WATER OR SEWER THAT DOES NOT HAVE A PERMANENT STRUCTURE THAT CLEARLY INDICATES THE PRESENCE OF AN ASSET. **SCWSFA** WILL REVIEW THESE LOCATIONS ON A CASE-BY-CASE BASIS AND IT SHALL BE THE RESPONSIBILITY OF THE CONTRACTOR TO COORDINATE THE POST LOCATIONS WITH **SCWSFA** REPRESENTATIVES.

Georgia One-Call Center 1-800-282-7411
Call at Least Two Working Days Before You Dig
It's The Law

GEORGIA811
www.Georgia811.com

spalding county SCWA water authority

SPALDING COUNTY WATER AND SEWERAGE AUTHORITY

119 E. SOLOMON STREET,
GRIFFIN, GA 30223
(770) 467-4777

TYPICAL SCWSFA NOTES

DESIGNED: SCWSFA
DATE: 09/1995
DRAWN:
SCALE: NTS

BY	REVISION	DATE
JTJ	#2	10/22
	#1	03/07

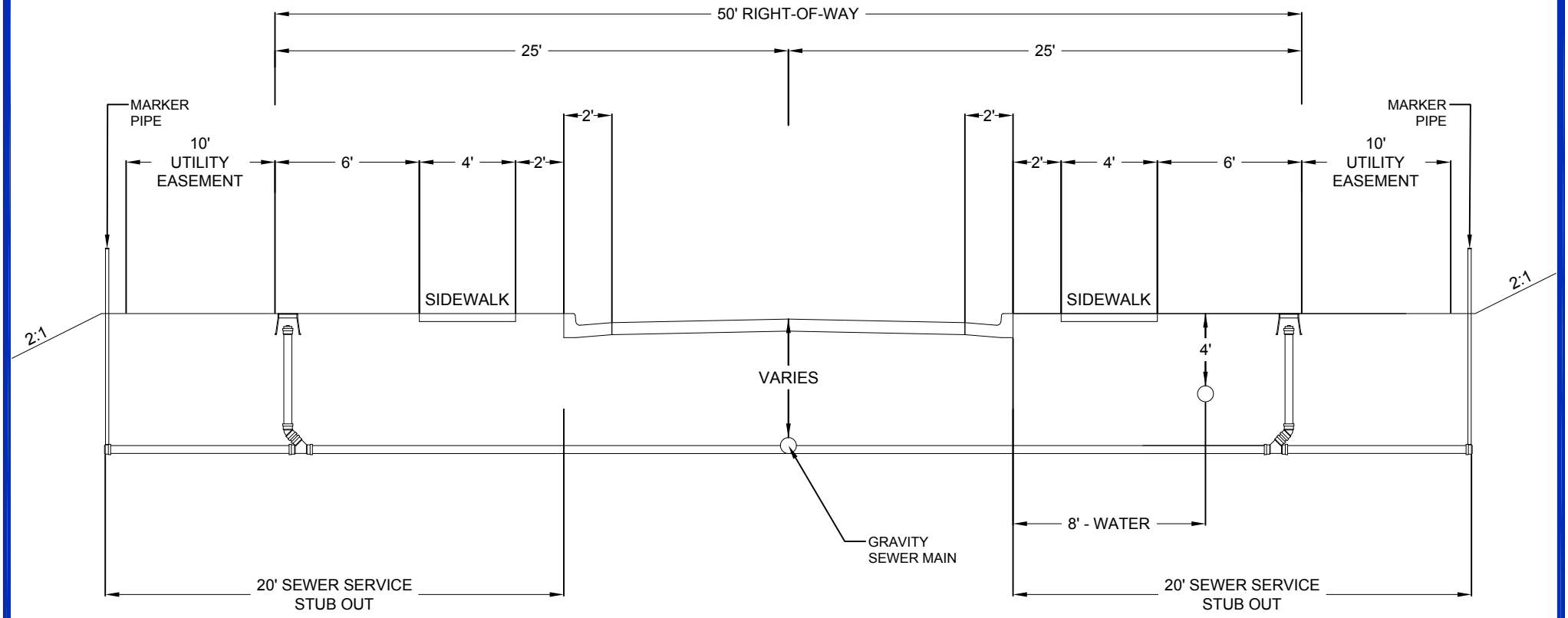

NOTES:

1. NO TREES OR FENCES ALLOWED WITHIN THE ROAD R/W OR UTILITY EASEMENT EXCEPT WHERE REQUIRED BY CITY, COUNTY, OR OTHER GOVERNMENT ORDINANCE.
2. ALL TREES SHALL BE CLEARED AND SHOULDERS GRADED WITHIN 6" OF FINAL GRADE (INCLUDING UTILITY EASEMENT) PRIOR TO INSTALLATION OF ANY UTILITIES.
3. UTILITY PLACEMENT SHALL REMAIN CONSISTENT FROM BACK OF CURB THROUGHOUT THE PROJECT REGARDLESS OF ANY INCONSISTENCIES IN ROAD CONSTRUCTION. EXAMPLES: STORM SEWERS, CULVERTS, CUL-DE-SACS, ETC...(EXCEPT CATV).
4. TOTAL CLEARED AND GRADED WIDTH TO BE SIXTY (60) FEET MINIMUM. ELECTRIC, GAS, TELEPHONE, AND CABLE TELEVISION SHALL BE PLACED WITHIN TEN (10) FOOT UTILITY EASEMENT.
5. PROPERTY CORNER REFERENCE SHALL BE PLACED ON CURB AND GUTTER AND ON TEN (10) FOOT OFFSET STAKE.
6. TEN (10) FOOT UTILITY EASEMENT SHALL BE SHOWN AND RECORDED ON THE FINAL PLAT AND PROVIDED TO SCWA.
7. WATER METER BOXES SHALL BE LOCATED AT EDGE OF R/W.
8. SEWER SERVICE SHALL BE STUBBED OUT TWENTY (20) FEET FROM BACK OF CURB.
9. WATER LATERALS SHALL BE MARKED WITH A BLUE "W" ON CURB.
10. SEWER LATERALS SHALL BE MARKED WITH A GREEN "X" ON CURB.
11. DEPTH REQUIREMENTS INDICATE MINIMUM DEPTH AT TIME OF INSTALLATION BELOW CURB LINE.
12. THESE STANDARDS MAY BE COMBINED WITH GOVERNING ROADWAY JURISDICTION UTILITY PLACEMENT STANDARDS.
13. UTILITIES SHALL BE LOCATED WITHIN PLUS/MINUS 6" OF APPROVED PLAN LOCATION UNLESS APPROVED BY SCWA.
14. SEWER CLEAN OUT SHALL BE PROVIDED AT R/W LINE FOR EVERY SERVICE. NO COMBINED SEWER LATERALS ARE ALLOWED MAINTAIN MINIMUM EIGHTEEN (18) INCHES VERTICAL SEPARATION BETWEEN WATER AND SEWER AT ALL CROSSINGS. WATERLINE SHALL BE ABOVE SEWER.
15. ALL METER BOXES WITHIN TRAFFIC/DRIVE AREAS SHALL BE RATED FOR H-20 LOAD CAPACITY.

spalding county SCWA water authority

SPALDING COUNTY WATER AUTHORITY

RESIDENTIAL UTILITY PLACEMENT FOR ROAD WITH 50' RIGHT-OF-WAY

SPEC. DATE: 2026

REVISED: 11/2026

SCALE: N.T.S

DETAIL NO.
G06

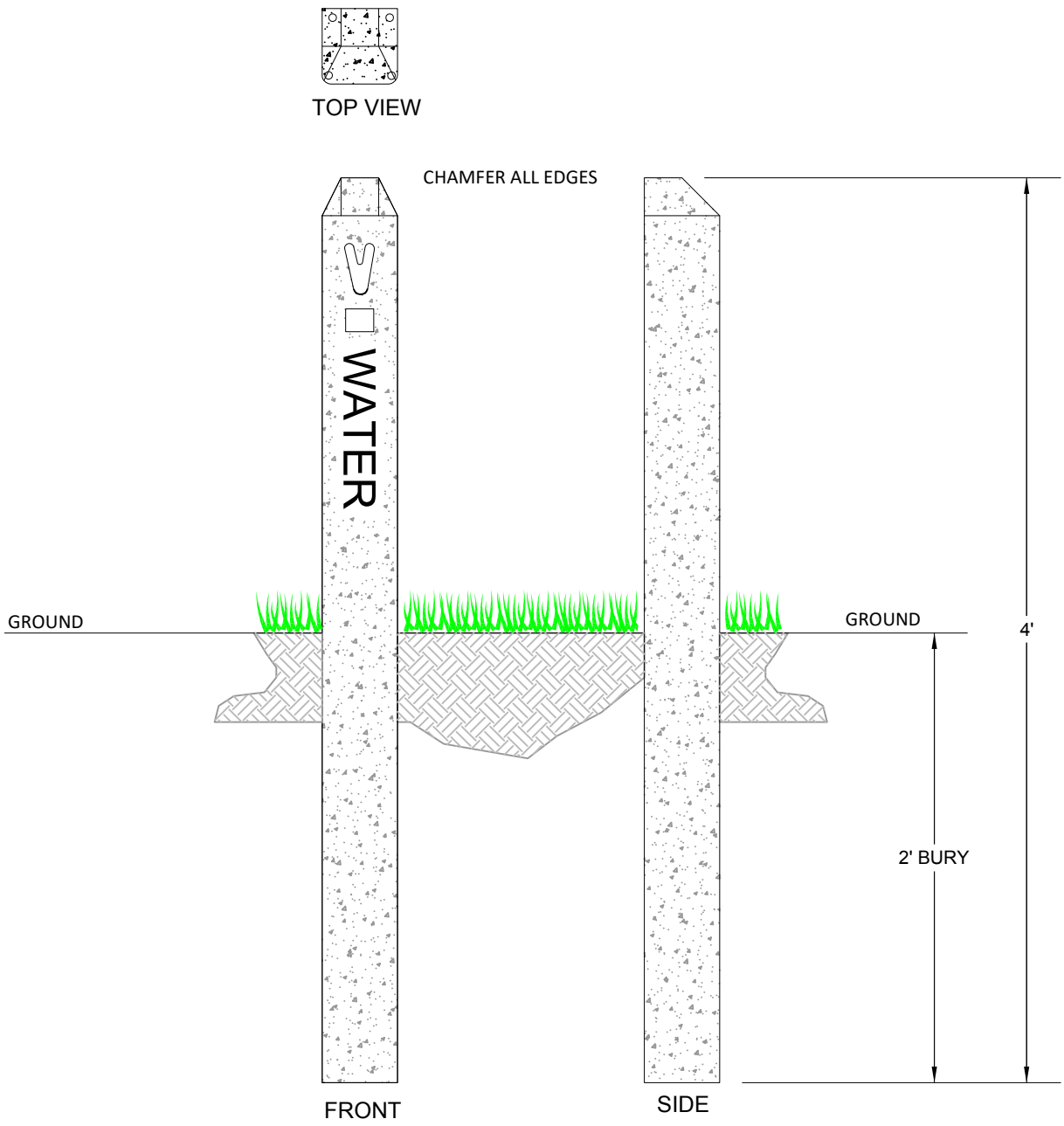

SPALDING COUNTY WATER AUTHORITY

CONCRETE VALVE MARKER

SPEC. DATE: 2026

REVISED: N/A

SCALE: N.T.S

DETAIL NO. W02

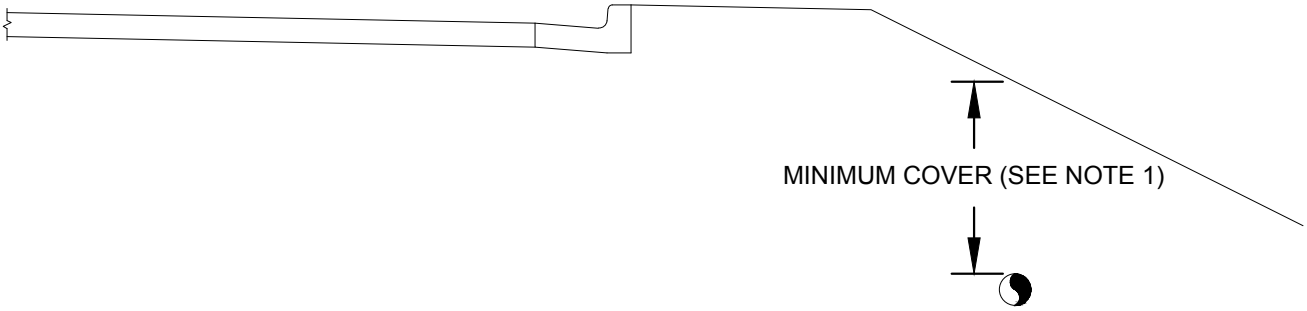

PIPE DEPTH WITH DECLINING GRADE AT EDGE OF PAVEMENT

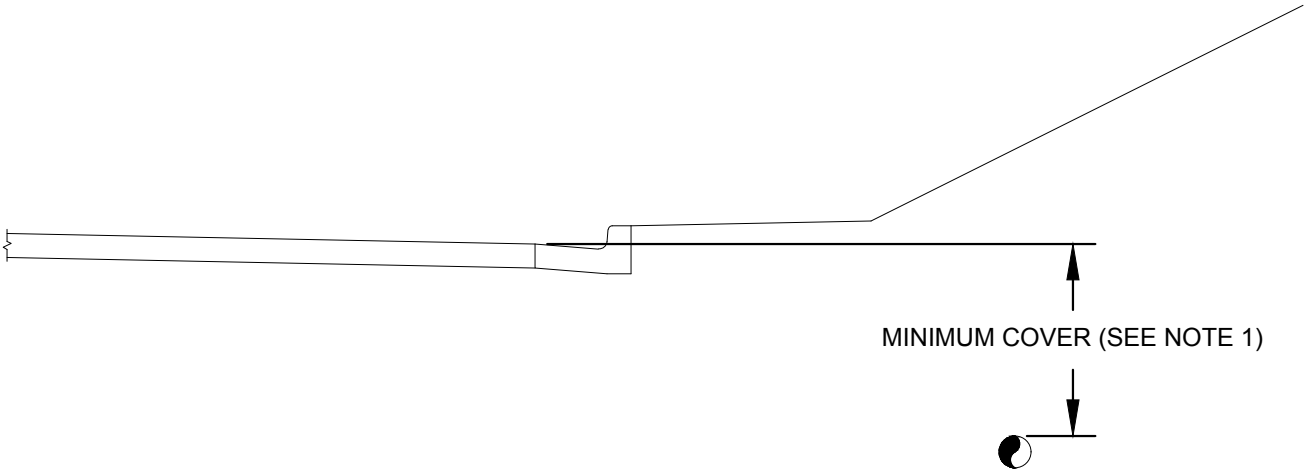

PIPE DEPTH WITH INCREASING GRADE AT EDGE OF PAVEMENT

NOTES:

1. DEPTH OF COVER OVER WATER MAINS LESS THAN 12" DIA SHALL BE MINIMUM 4'-0", FOR WATER MAINS GREATER THAN 12" DIA, MINIMUM COVER SHALL BE 5'-0" UNLESS OTHERWISE APPROVED BY SCWA.

spalding county SCWA water authority	SPALDING COUNTY WATER AUTHORITY	SPEC. DATE: 2024
	PIPE DEPTH AT EDGE OF PAVEMENT	REVISED: N/A
		SCALE: N.T.S
		DETAIL NO. W03

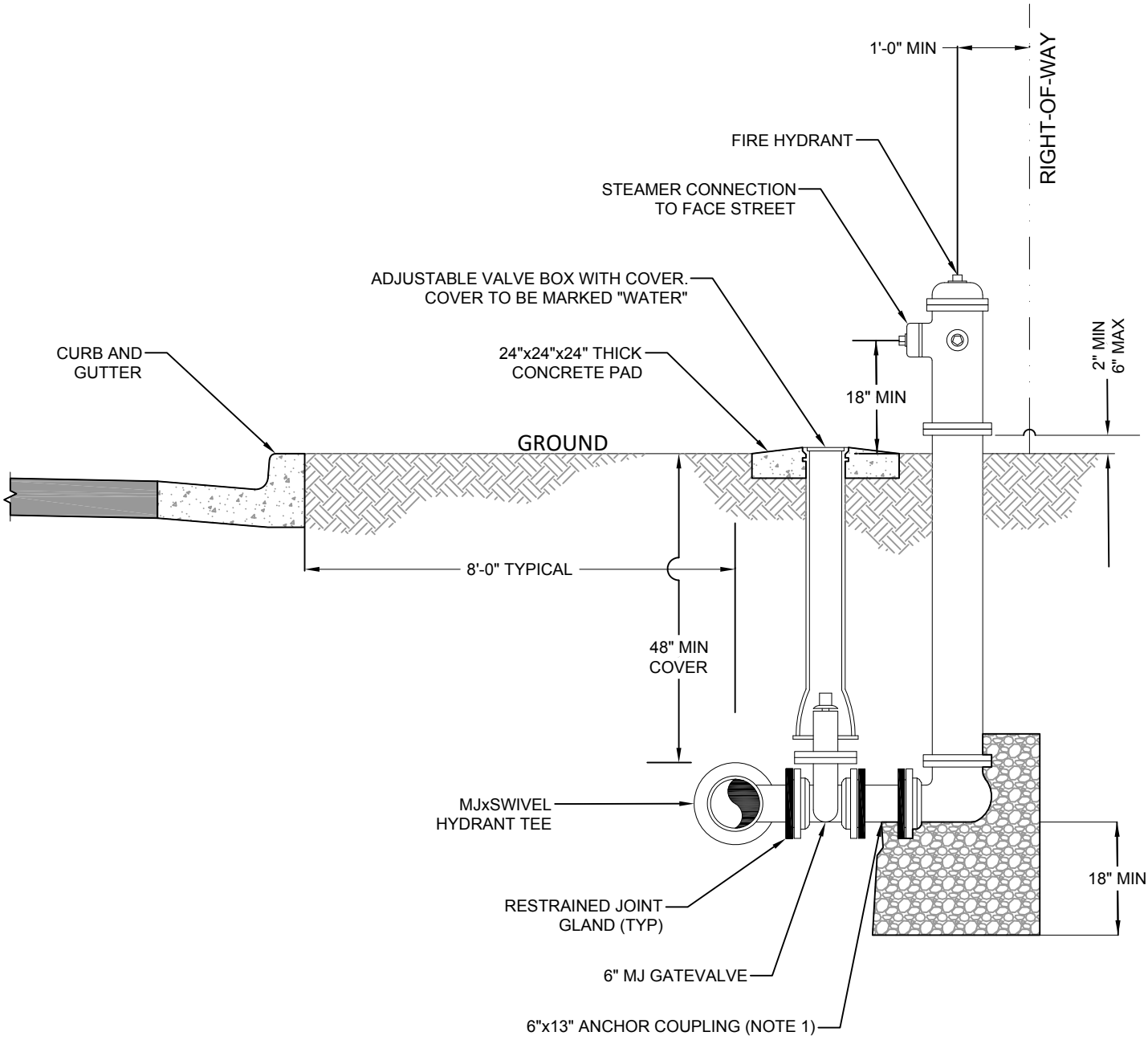

NOTE:

1. LONGER ANCHOR COUPLINGS MAY BE USED WHEN REQUIRED. IF ANCHOR COUPLINGS ARE NOT USED, VALVE SHALL BE RODDED TO THE TEE AND HYDRANT SHALL BE RODDED TO THE VALVE USING A MINIMUM OF TWO (2) ¾" THREADED RODS ON EACH CONNECTION.
2. FIRE HYDRANT TO BE A 5-1/4" MVO M&H STYLE 129 TRAFFIC MODEL (3-WAY) AS MANUFACTURED BY THE M&H VALVE COMPANY (A DIVISION OF MCWANE INC.) OR SCWA APPROVED EQUAL.
3. SCWA OWNED AND MAINTAINED FIRE HYDRANT COLOR TO BE OSHA SAFETY YELLOW (ACCEPTABLE COLOR CODE RAL 1023 OR RAL 1003).
4. PRIVATELY OWNED AND MAINTAINED FIRE HYDRANT COLOR TO BE SILVER.
5. FIRE HYDRANTS SHALL DELIVERED FROM FACTORY IN CORRECT COLOR.
6. ALL FITTINGS SHALL BE RESTRAINED WITH MEGA-LUGS.
7. TIE RODS SHALL BE ALLOY STEEL WITH MINIMUM TENSILE STRENGTH OF 125,000 PSI. RODS TO BE COATED WITH BITUMINOUS PAINT AFTER INSTALLATION.

SPALDING COUNTY WATER AUTHORITY

TYPICAL FIRE HYDRANT ASSEMBLY

SPEC. DATE: 2026

REVISED: 11/2026

SCALE: N.T.S

DETAIL NO.
W04

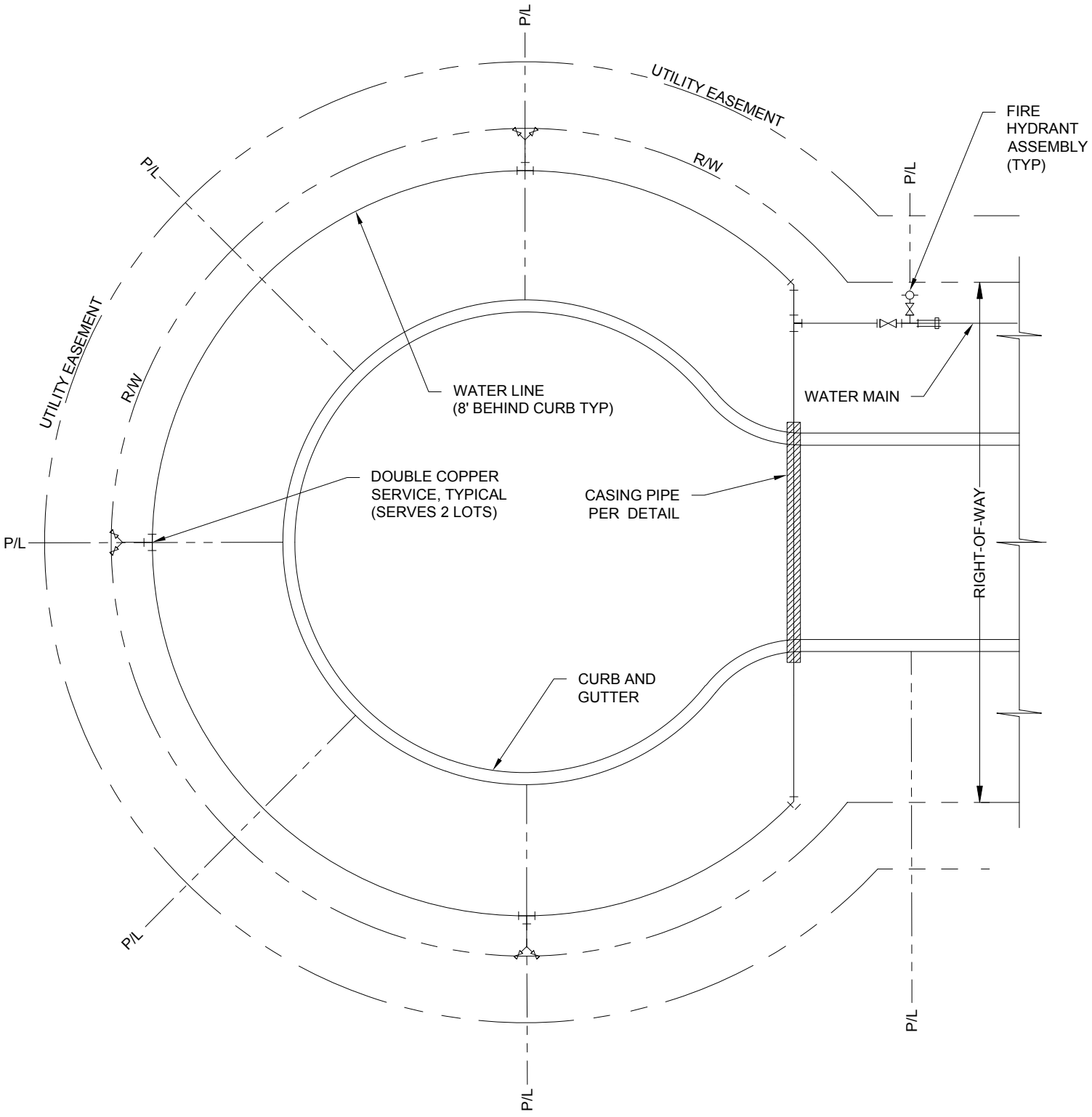

SPALDING COUNTY WATER AUTHORITY

FIRE HYDRANT IN CUL-DE-SAC

SPEC. DATE: 2026	
REVISED: 11/2026	
SCALE: N.T.S	
DETAIL NO.	W05

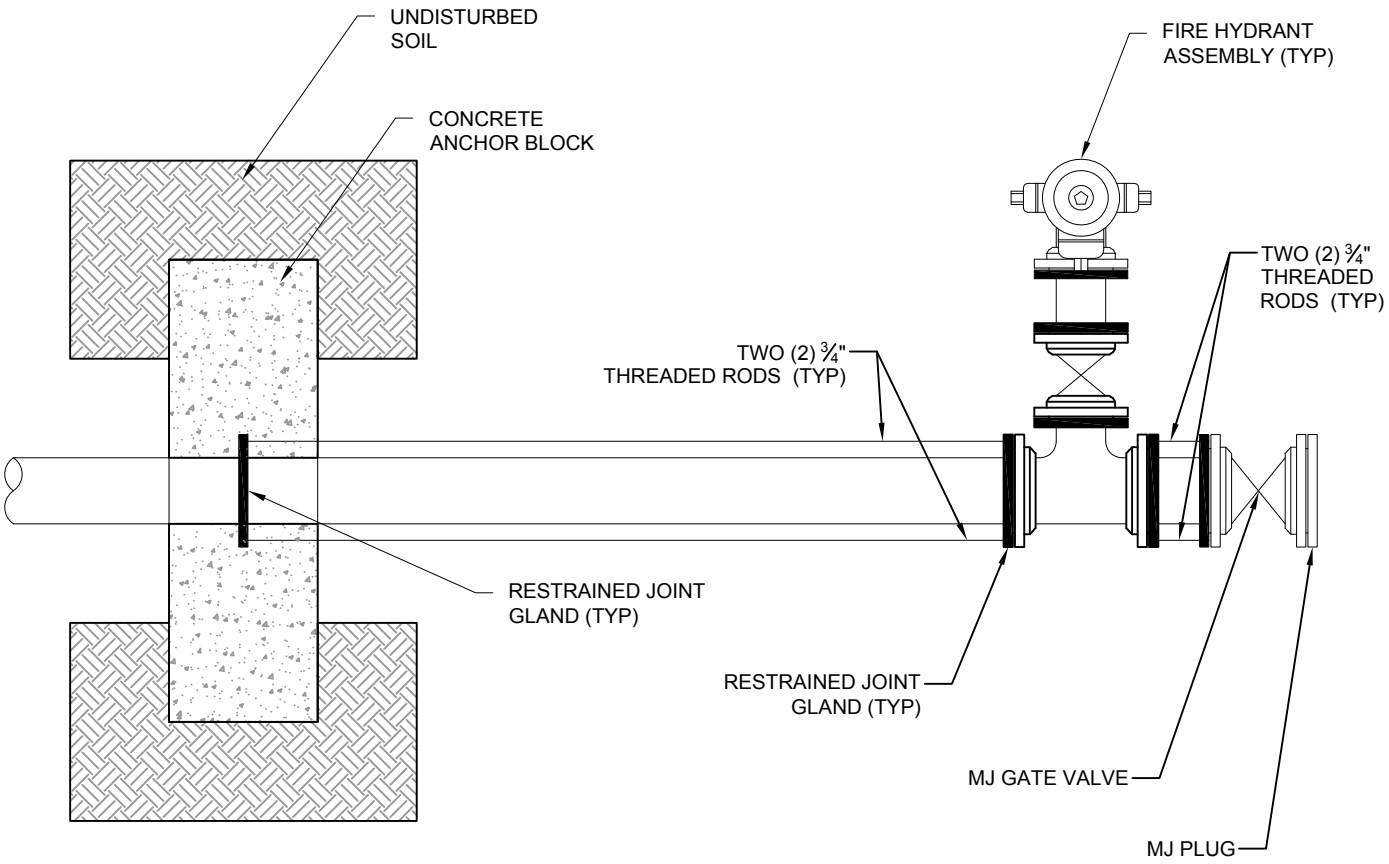

PLAN VIEW

NOTE:

1. ALL FITTINGS AND VALVES SHALL BE RESTRAINED.
2. FIELD CONDITIONS MAY REQUIRE ADDITIONAL RESTRAINT AS DIRECTED BY SCWA.
3. THIS DETAIL SHALL BE USED IN CONJUNCTION WITH TYPICAL FIRE HYDRANT DETAIL.

SPALDING COUNTY WATER AUTHORITY

FIRE HYDRANT AT DEAD END

SPEC. DATE: 2026

REVISED: 11/2026

SCALE: N.T.S

DETAIL NO. W06

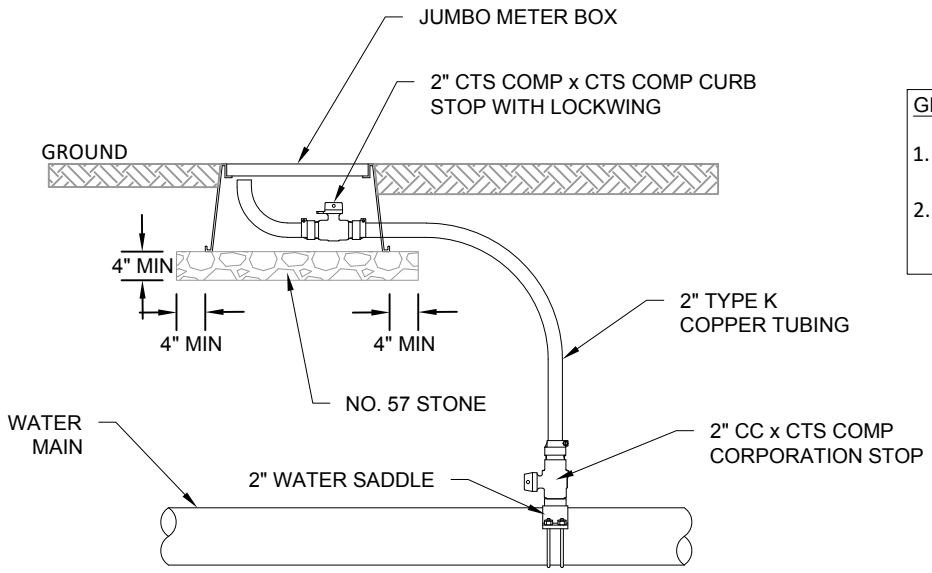

GENERAL WATER BLOW-OFF NOTES:

1. NO GALVANIZED PIPING OR FITTINGS WILL BE ACCEPTED.
2. FINAL BLOW-OFF LOCATIONS TO BE DETERMINED BY A **SCWA** REPRESENTATIVE

WATER LINE BLOW-OFF

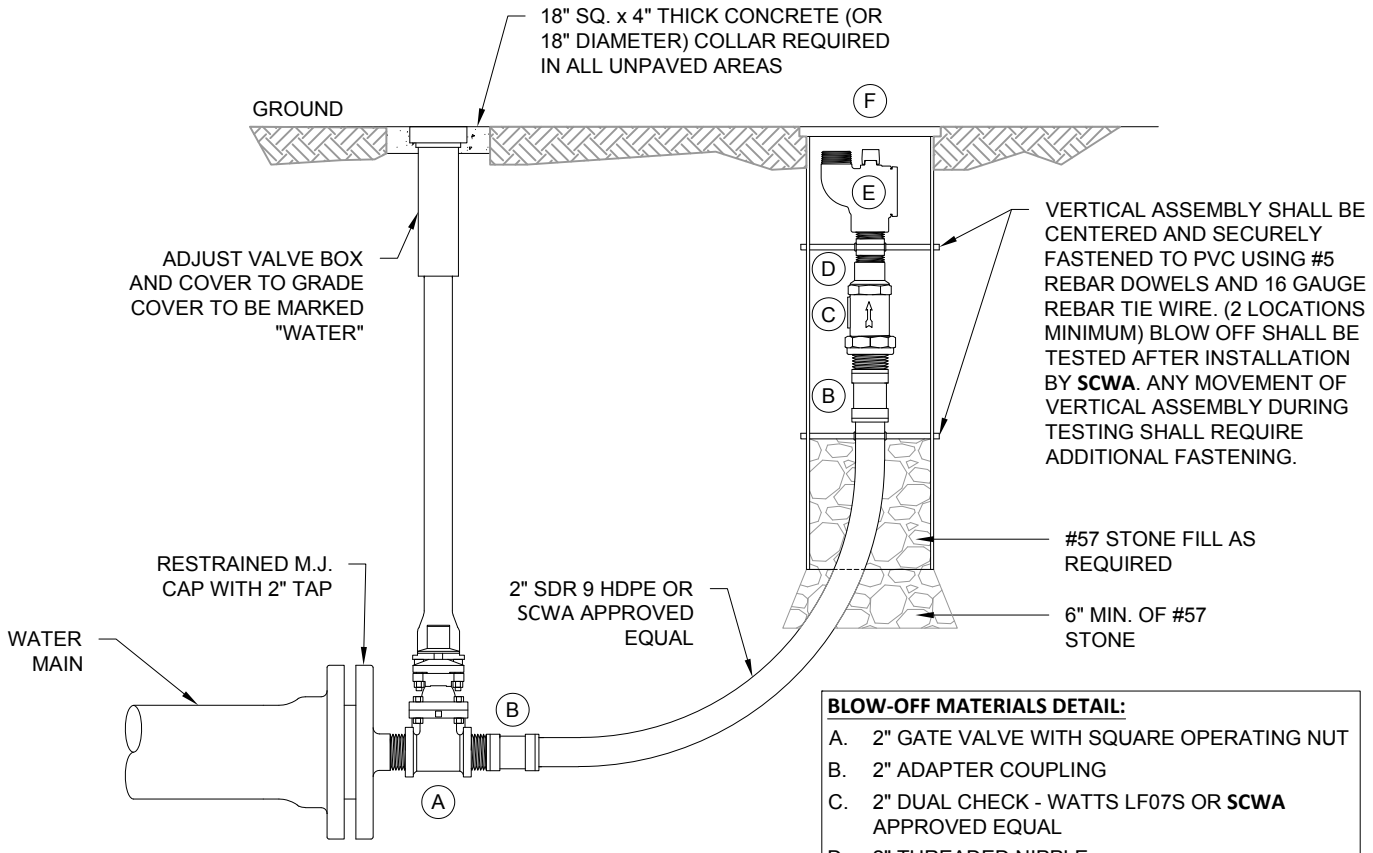

TERMINAL END BLOW-OFF

BLOW-OFF MATERIALS DETAIL:

A. 2" GATE VALVE WITH SQUARE OPERATING NUT
B. 2" ADAPTER COUPLING
C. 2" DUAL CHECK - WATTS LF07S OR **SCWA** APPROVED EQUAL
D. 2" THREADED NIPPLE
E. FORD BLOW-OFF BALL VALVE BLA18-777-TA-NL
F. MB-9 ROUND METER BOX WITH "WATER VALVE" LID AND 6" SCH 40 PVC VERTICAL SLEEVE TO HOUSE BLOW-OFF ASSEMBLY.

SPALDING COUNTY WATER AUTHORITY

WATER MAIN BLOW-OFF

SPEC. DATE: 2026
REVISED: 11/2026
SCALE: N.T.S
DETAIL NO. W07

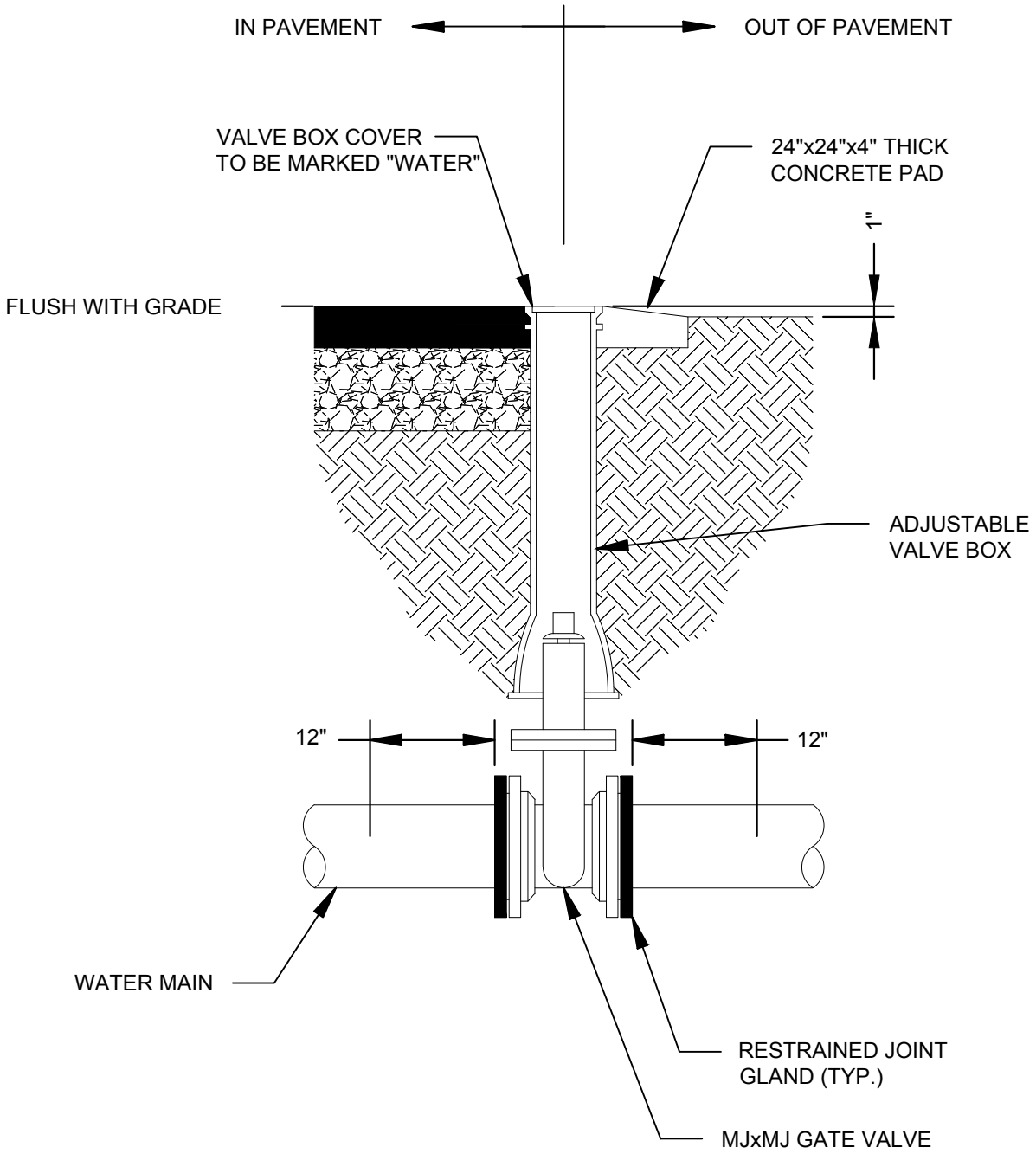

SPALDING COUNTY WATER AUTHORITY

WATER LINE ISOLATION VALVE

SPEC. DATE: 2024

REVISED: N/A

SCALE: N.T.S.

DETAIL NO.

W09

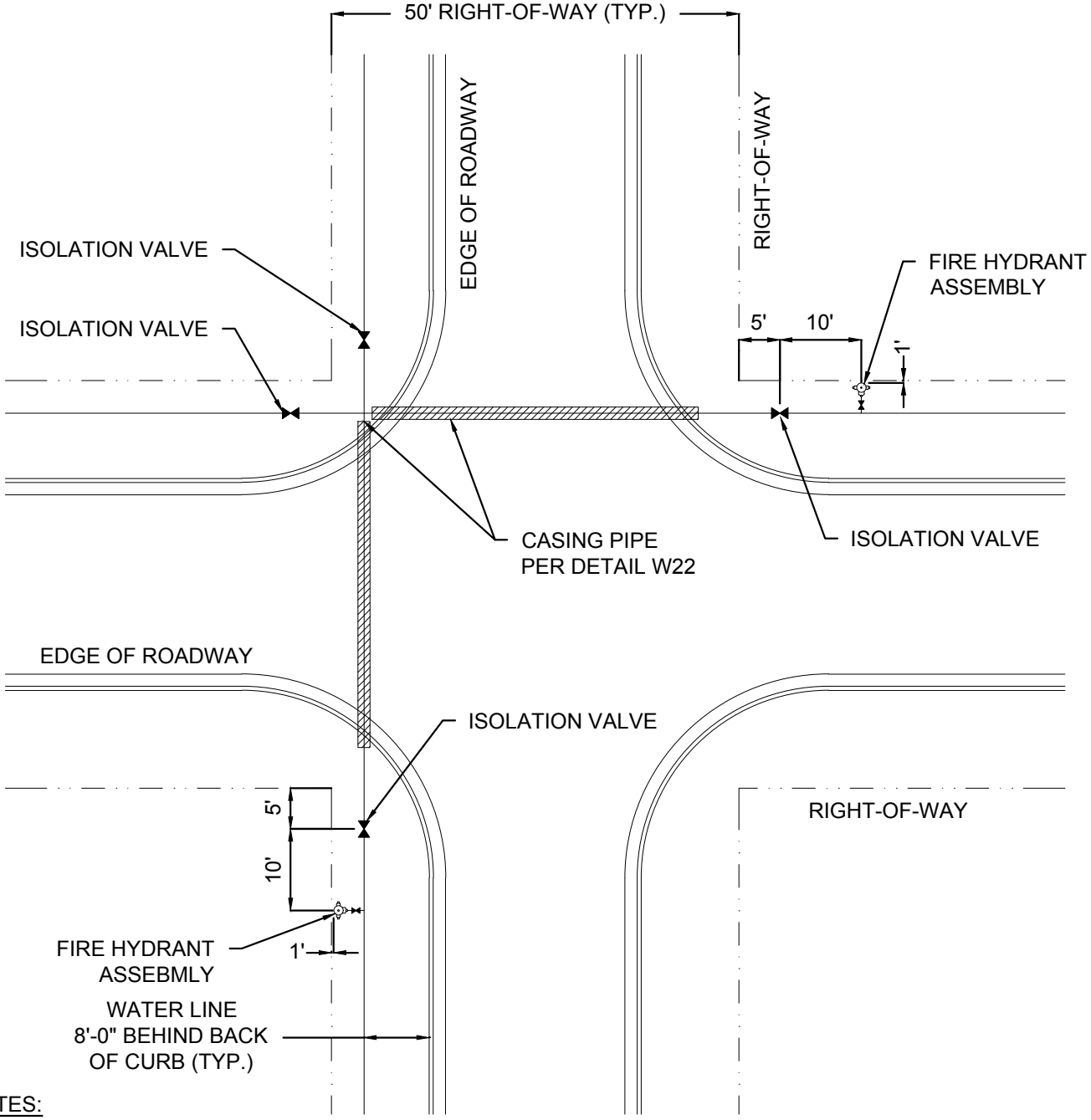

NOTES:

1. WHERE EXISTING STRUCTURES EXIST AND INTERFERE WITH THE ROUTE OF THE WATER LINE, THE WATER LINE SHALL BE ROUTED AROUND THE STRUCTURE BY PIPE JOINT DEFLECTION OR, WHERE NECESSARY, WITH MAXIMUM 45° BENDS.

2. VALVES AT CROSS CONNECTIONS SHALL BE RODDED TO THE FITTING USING A MINIMUM OF TWO ¾" THREADED RODS. THE MJ FLANGE ON THE OPPOSITE SIDE OF THE FITTING SHALL BE RESTRAINED USING A MEGALUG.

spalding county SCWA water authority	SPALDING COUNTY WATER AUTHORITY	SPEC. DATE: 2026
		REVISED: N/A
	# WATER LINE INTERSECTION	SCALE: N.T.S.
		DETAIL NO. W10

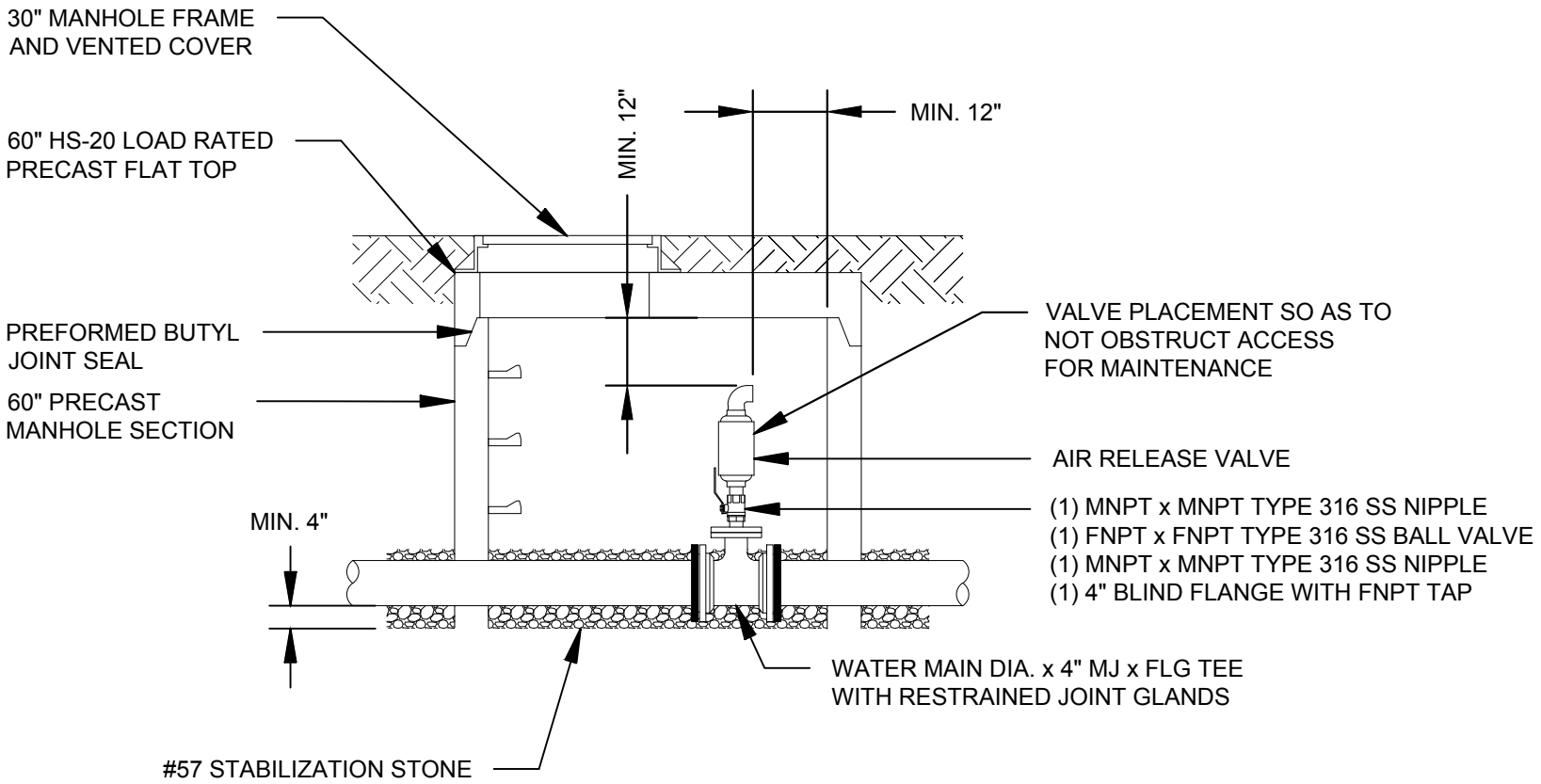

SPALDING COUNTY WATER AUTHORITY

SPEC. DATE: 2024

REVISED: N/A

SCALE: N.T.S.

WATER MAIN
COMBINATION AIR/VACUUM VALVE

DETAIL NO.

W11

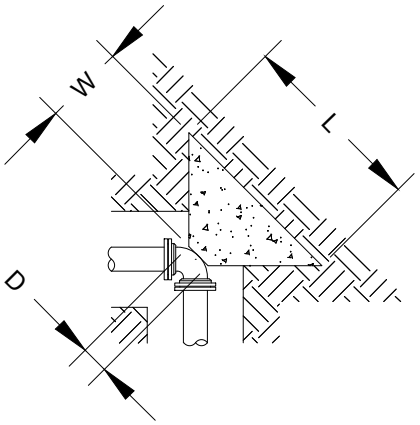

BEND PLAN

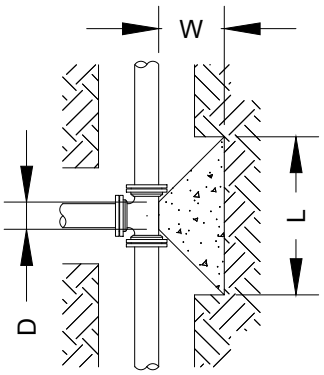

TEE PLAN

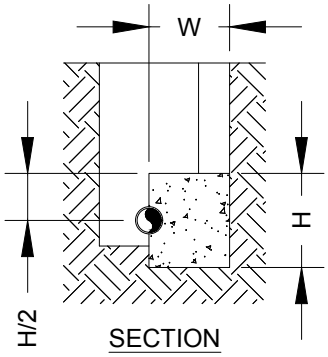

SECTION

TEES						
PIPE DIA. (IN)	D DIM.	L DIM.	H DIM.	W DIM.	CONC. VOLUME (YD³)	THRUST (LBF)
4	0'-6"	2'-4"	1'-2"	0'-11"	0.06	4,072
6	0'-8"	3'-4"	1'-8"	1'-4"	0.16	8,413
8	0'-9"	4'-5"	2'-3"	1'-10"	0.39	14,473
10	0'-11"	5'-5"	2'-9"	2'-3"	0.73	21,773
12	1'-1"	6'-5"	3'-3"	2'-8"	1.20	30,791
90° BENDS						
PIPE DIA. (IN)	D DIM.	L DIM.	H DIM.	W DIM.	CONC. VOLUME (YD³)	THRUST (LBF)
4	0'-5"	2'-9"	1'-5"	1'-2"	0.10	5,758
6	0'-8"	4'-0"	2'-0"	1'-8"	0.29	11,898
8	0'-9"	5'-3"	2'-8"	2'-3"	0.67	20,468
10	0'-11"	6'-5"	3'-3"	2'-9"	1.21	30,792
12	1'-1"	8'-7"	3'-10"	3'-3"	2.00	43,545
45° BENDS						
PIPE DIA. (IN)	D DIM.	L DIM.	H DIM.	W DIM.	CONC. VOLUME (YD³)	THRUST (LBF)
4	0'-4"	2'-0"	1'-0"	0'-10"	0.04	3,116
6	0'-7"	2'-11"	1'-6"	1'-2"	0.11	6,439
8	0'-8"	3'-10"	1'-11"	1'-7"	0.25	11,077
10	0'-11"	4'-9"	2'-5"	1'-11"	0.49	16,664
12	1'-1"	6'-7"	2'-10"	2'-3"	0.79	23,566
22½° BENDS						
PIPE DIA. (IN)	D DIM.	L DIM.	H DIM.	W DIM.	CONC. VOLUME (YD³)	THRUST (LBF)
4	0'-5"	1'-5"	0'-9"	0'-6"	0.01	1,589
6	0'-7"	2'-1"	1'-1"	0'-9"	0.04	3,283
8	0'-9"	2'-9"	1'-5"	1'-0"	0.09	5,647
10	0'-10"	3'-4"	1'-8"	1'-3"	0.16	8,495
12	1'-0"	4'-0"	2'-0"	1'-6"	0.28	12,014

NOTES:

1. THRUST BLOCK DIMENSIONS ARE BASED ON THE FOLLOWING DESIGN CRITERIA.

   WORKING PRESSURE = 150 PSI
   SOIL BEARING CAPACITY = 1,500 PSF
   SAFETY FACTOR = 1.5

   THESE ARE THE MINIMUM DESIGN CRITERIA. IF ACTUAL WORKING PRESSURE IS GREATER THAN 150 PSI OR IF ACTUAL SOIL BEARING CAPACITY IS LESS THAN 1,500 PSF, DIMENSIONS SHALL BE RECALCULATED.

2. THRUST BLOCK CONCRETE SHALL HAVE A MINIMUM 28 DAY COMPRESSIVE STRENGTH OF 2,500 PSI.
3. THRUST BLOCK SHALL BEAR AGAINST UNDISTURBED SOIL.
4. A MINIMUM 10 MIL PLASTIC SHEET SHALL BE PLACED BETWEEN CONCRETE AND PIPE.
5. ALL BOLTS SHALL REMAIN ACCESSIBLE. DO NOT COVER WITH CONCRETE.

spalding county SCWA water authority

SPALDING COUNTY WATER AUTHORITY

CONCRETE THRUST BLOCK

SPEC. DATE: 2024

REVISED: N/A

SCALE: N.T.S.

DETAIL NO.

W12

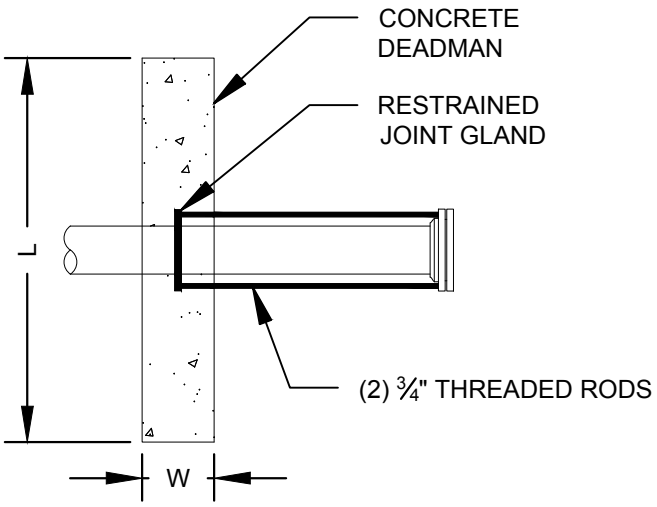

PLAN

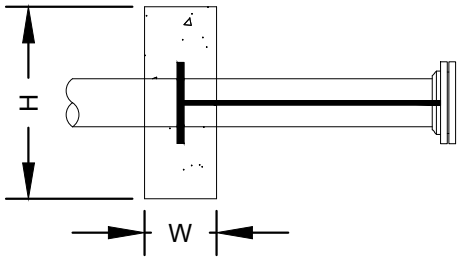

SECTION

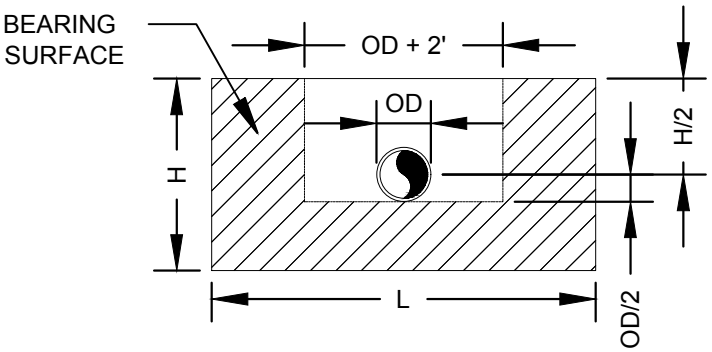

DEADMAN DIMENSION					
PIPE DIA. (IN)	L DIM.	H DIM.	W DIM.	CONC. VOLUME (YD^3)	THRUST (LBF)
4	3'-0"	1'-7"	1'-0"	0.18	4,072
6	4'-3"	2'-1"	1'-0"	0.33	8,413
8	5'-4"	2'-8"	1'-0"	0.53	14,473
10	6'-0"	3'-6"	1'-0"	0.78	21,773
12	7'-1"	4'-0"	1'-0"	1.05	30,791

NOTES:

1. DEADMAN DIMENSIONS ARE BASED ON THE FOLLOWING DESIGN CRITERIA.

   WORKING PRESSURE = 150 PSI
   SOIL BEARING CAPACITY = 1,500 PSF
   SAFETY FACTOR = 1.5

   THESE ARE THE MINIMUM DESIGN CRITERIA. IF ACTUAL WORKING PRESSURE IS GREATER THAN 150 PSI OR IF ACTUAL SOIL BEARING CAPACITY IS LESS THAN 1,500 PSF, DIMENSIONS SHALL BE RECALCULATED.

2. DEADMAN CONCRETE SHALL HAVE A MINIMUM 28 DAY COMPRESSIVE STRENGTH OF 2,500 PSI.
3. DEADMAN SHALL BEAR AGAINST UNDISTURBED SOIL.
4. A MINIMUM 10 MIL PLASTIC SHEET SHALL BE PLACED BETWEEN CONCRETE AND PIPE.
5. ALL BOLTS SHALL REMAIN ACCESSIBLE. DO NOT COVER WITH CONCRETE.

SPALDING COUNTY WATER AUTHORITY

SPEC. DATE: 2024

REVISED: N/A

SCALE: N.T.S.

CONCRETE DEADMAN

DETAIL NO.
W13

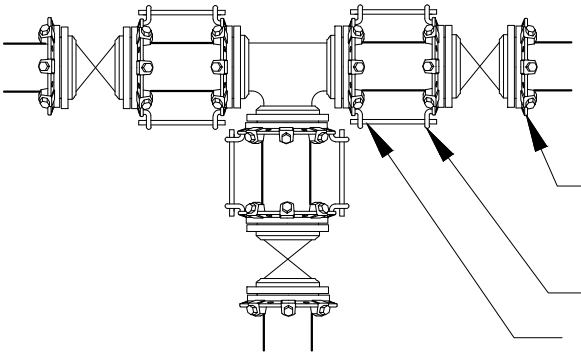

FITTING WITH TIE-RODS AND MEGALUGS

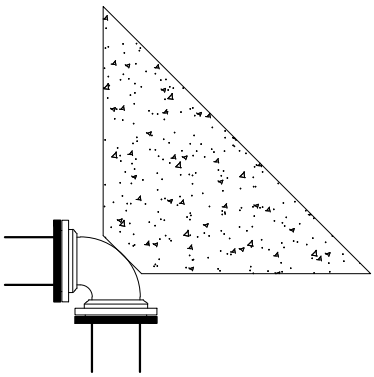

FITTING WITH RESTRAINED JOINT GLAND AND THRUST BLOCK

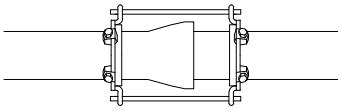

TIE-RODS FROM RESTRAINED JOINT GLAND TO RESTRAINED JOINT GLAND

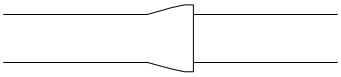

PUSH-ON JOINT WITH RESTRAINED JOINT GASKET

PIPE DIA. (IN)	ROD SIZE (IN)	# OF RODS
6	¾"	2
8	¾"	4
10	¾"	4
12	¾"	4
14	¾"	4
16	¾"	6

TIE-ROD CHART

NOTES:

1. RESTRAINED JOINT LENGTHS SHALL BE CALCULATED BY THE DESIGN ENGINEER. CALCULATIONS SHALL BE SUBMITTED TO SCWA.
2. THREADED ROD SHALL HAVE A MINIMUM YIELD STRENGTH OF 50,000 PSI.

SPALDING COUNTY WATER AUTHORITY

SPEC. DATE: 2024

REVISED: N/A

SCALE: N.T.S.

THRUST RESTRAINT

DETAIL NO.

W14

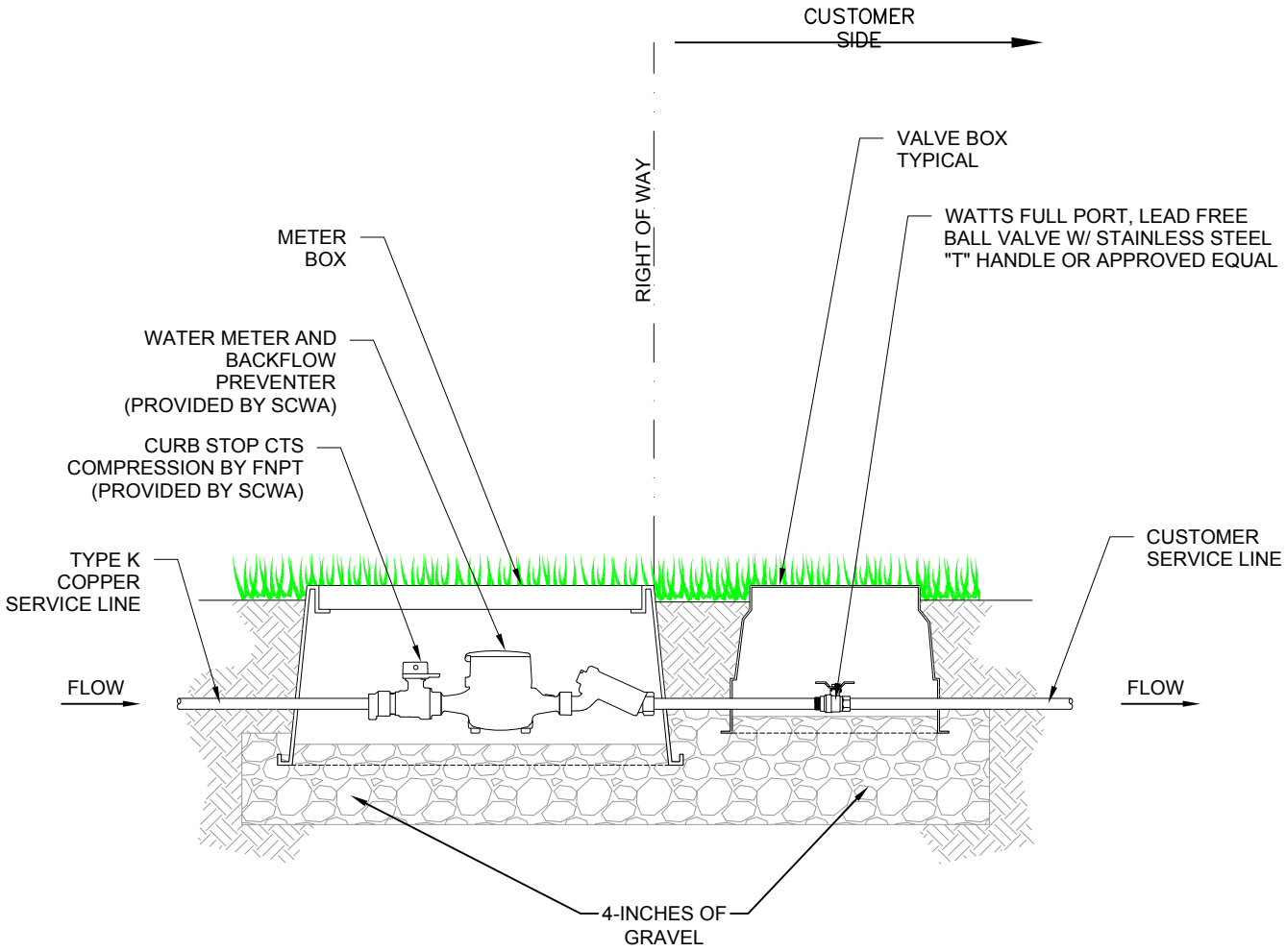

NOTE:

1. SCWA WILL PROVIDE RESIDENTIAL WATER METERS AND BACKFLOW PREVENTERS. ALL OTHER APPURTANCES SHALL BE PROVIDED BY THE DEVELOPER AND/OR CONTRACTOR.
2. WATER METER BOX AND LIDS SHALL HAVE 2-INCH DIAMETER HOLE OFFSET FOR TOUCH READ INSTALLATION.
3. EACH SERVICE SHALL BE MARKED WITH A "W" SAW CUT INTO THE TOP OF CURB AND PAINTED BLUE.
4. INSERT A 4-FOOT LONG PIECE OF PVC PIPE ADJACENT TO THE METER BOX TO MARK THE METER LOCATION. PAINT PVC PIPE BLUE.
5. THE HOLE IN THE METER BOX MUST BE PLUGGED WITH AN ANTENNA PLUG.
6. NO PERMANENT STRUCTURES SHALL BE LOCATED WITHIN 5+FEET OF WATER SERVICE.
7. TYPICAL INSTALLATION MAY BE MODIFIED AT DISCRETION OF SCWA.
8. THIS DETAIL SHALL BE USED FOR RESIDENTIAL WATER SERVICES THAT DO NOT HAVE IRRIGATION SERVICE. IRRIGATION SYSTEMS REQUIRE A TESTABLE BACKFLOW AND CONNECTION SHALL FOLLOW DETAIL W 29.

spalding county SCWA water authority

SPALDING COUNTY WATER AUTHORITY

RESIDENTIAL WATER METER DETAIL

SPEC. DATE: 2026

REVISED: 11/2026

SCALE: N.T.S

DETAIL NO. W15

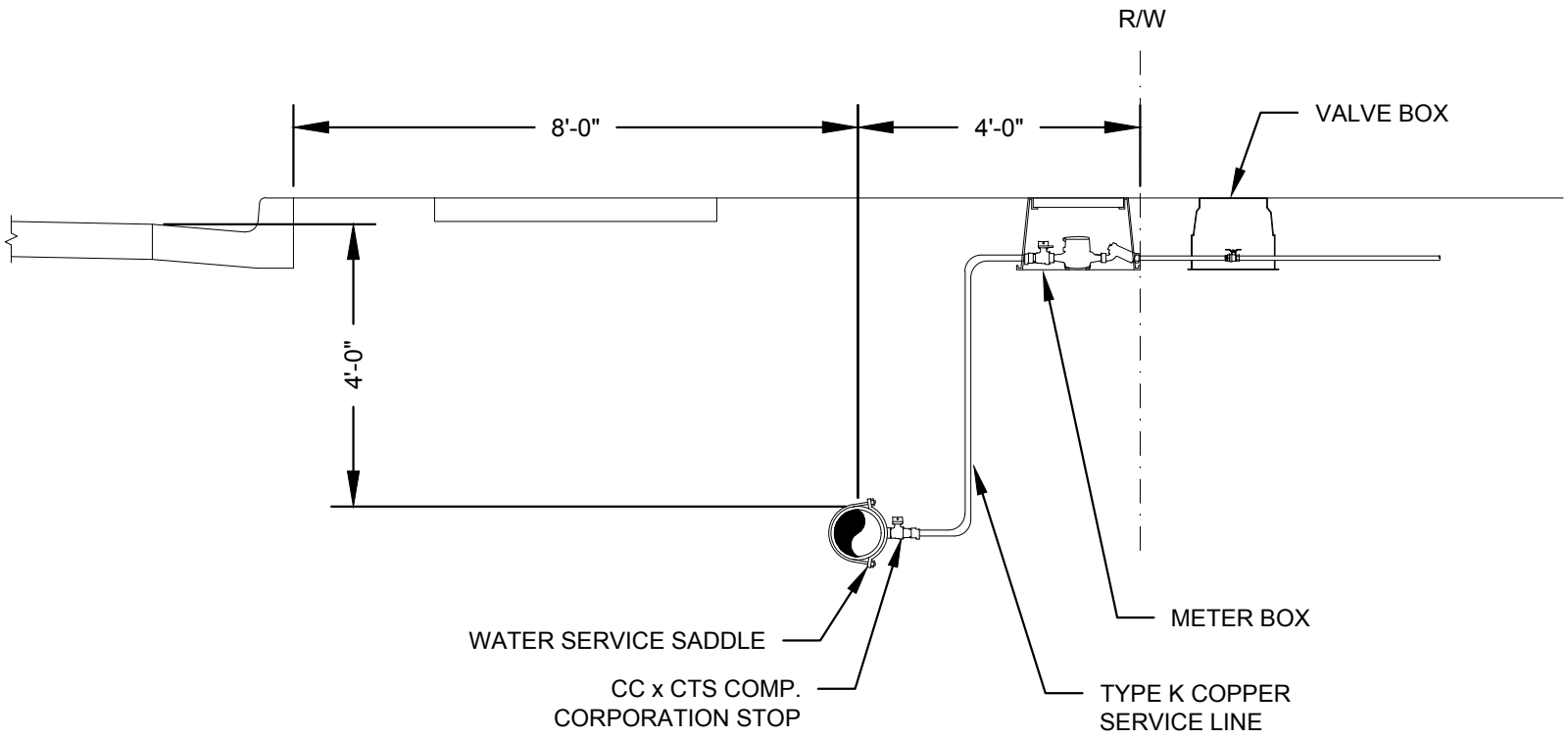

NOTES:

1. EACH SERVICE SHALL BE MARKED WITH A "W" SAW CUT INTO TOP OF CURB AND PAINTED BLUE.
2. INSERT A 4-FOOT LONG PIECE OF PVC PIPE ADJACENT TO THE METER BOX TO MARK THE METER LOCATION. PAINT PVC PIPE BLUE.
3. THE HOLE IN THE METER BOX LID MUST BE PLUGGED WITH AN ANTENNA PLUG.
4. NO PERMANENT STRUCTURES SHALL BE ALLOWED WITHIN 5 FEET OF WATER SERVICE.
5. TYPICAL INSTALLATION MAY BE MODIFIED AT THE DISCRETION OF SCWA.

SPALDING COUNTY WATER AUTHORITY

SHORT SIDE RESIDENTIAL SERVICE DETAIL

SPEC. DATE: 2024

REVISED: N/A

SCALE: N.T.S.

DETAIL NO.

W16

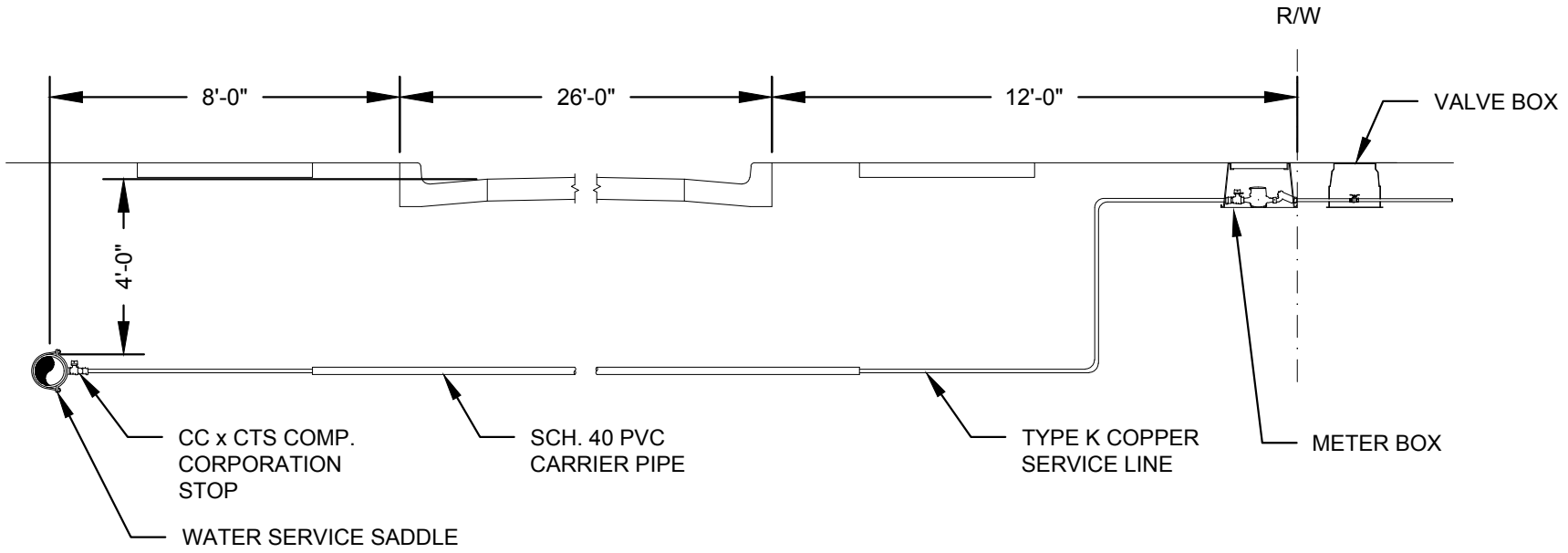

NOTES:

1. EACH SERVICE SHALL BE MARKED WITH A "W" SAW CUT INTO TOP OF CURB AND PAINTED BLUE.
2. INSERT A 4-FOOT LONG PIECE OF 1" PVC PIPE ADJACENT TO THE METER BOX TO MARK THE METER LOCATION. PAINT PVC PIPE BLUE.
3. THE HOLE IN THE METER BOX LID MUST BE PLUGGED WITH AN ANTENNA PLUG.
4. NO PERMANENT STRUCTURE SHALL BE ALLOWED WITHIN 5 FEET OF WATER SERVICE.
5. TYPICAL INSTALLATION MAY BE MODIFIED AT THE DISCRETION OF SCWA.

SPALDING COUNTY WATER AUTHORITY

LONG SIDE RESIDENTIAL SERVICE DETAIL

SPEC. DATE: 2024

REVISED: N/A

SCALE: N.T.S.

DETAIL NO.

W17

NOTE:

1. TABLE BELOW REFLECTS NEPTUNE HIGH PERFORMANCE PROTECTUS III FIRE SERVICE SPECIFICATIONS.
2. NEPTUNE MACH 10 METER CAN BE SUBSTITUTED FOR FIRELINES 3" AND GREATER WITH APPROVAL FROM THE SCWA.
3. IF NEPTUNE MACH 10 METER IS USED THE STRAINER SHALL BE INSTALLED IMMEDIATELY DOWNSTREAM OF THE METER AS RECOMMENDED BY THE MANUFACTURER.
4. FITTINGS INSIDE OF VAULT SHALL BE FLANGED.
5. ALL GATE VALVES WITHIN VAULT SHALL BE RISING STEM.
6. VAULT SHALL BE PRECAST REINFORCED CONCRETE WITH MINIMUM 6" THICKNESS TOP AND SIDES. INSIDE HEIGHT SHALL BE A MINIMUM OF 6'.
7. VAULT TOP SHALL BE REINFORCED CONCRETE WITH A MINIMUM 36" X 36" ACCESS OPENING OFFSET TO ONE SIDE.
8. PIPE SUPPORTS REQUIRED UNDER ALL VALVES AND PROTECTUS III METER.
9. MINIMUM CLEARANCE OF 12" BETWEEN VAULT WALLS AND FLANGES
10. METER ASSEMBLY AND BYPASS PIPING SHALL BE INDEPENDENTLY SUPPORTED WITH APPROVED PIPE SUPPORTS. SUPPORTS BE DESIGNED TO SUPPORT THE FULL WEIGHT OF THE PIPING, METER, VALVES, AND APPURTENANCES. PIPE SUPPORTS SHOWN ARE FOR REFERENCE ONLY. ACTUAL NUMBER, LOCATION, AND TYPE OF SUPPORT SHALL BE DETERMINED BASED ON VAULT CONFIGURATION, PIPE SIZE, VALVE ARRANGEMENT AND PIPING LAYOUT.

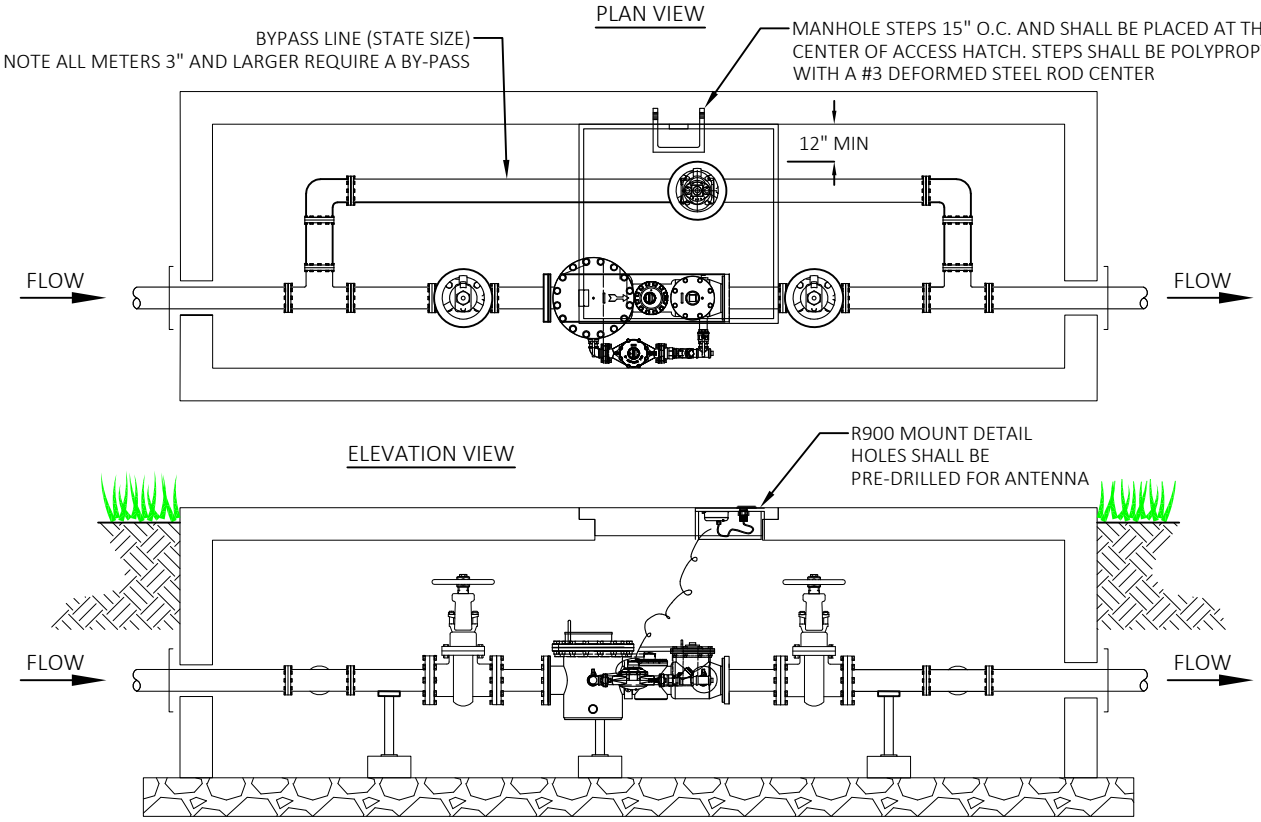

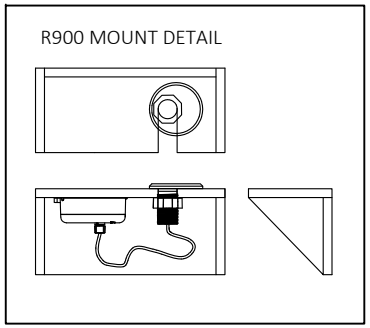

SIZE (IN)	NORMAL OPERATING RANGE @ 100% ACCURACY (±1.5%) (GPM)	AWWA STANDARD (GPM)	LOW FLOW @ 95% ACCURACY (GPM)	MAXIMUM INTERMITTENT FLOW RATE (GPM)
4	0.75 TO 1,200	4.0 TO 700	0.375	1,500
6	1.5 TO 2,500	5.0 TO 1,600	0.75	3,100
8	2.0 TO 4,000	8.0 TO 2,800	1.0	5,000
10	2.0 TO 6,500	8.0 TO 4,400	1.0	8,000

SPALDING COUNTY WATER AUTHORITY

SPEC. DATE: 2026

REVISED: 09/2026

SCALE: N.T.S.

COMMERCIAL / INDUSTRIAL FIRE LINE METER

DETAIL NO.
W18

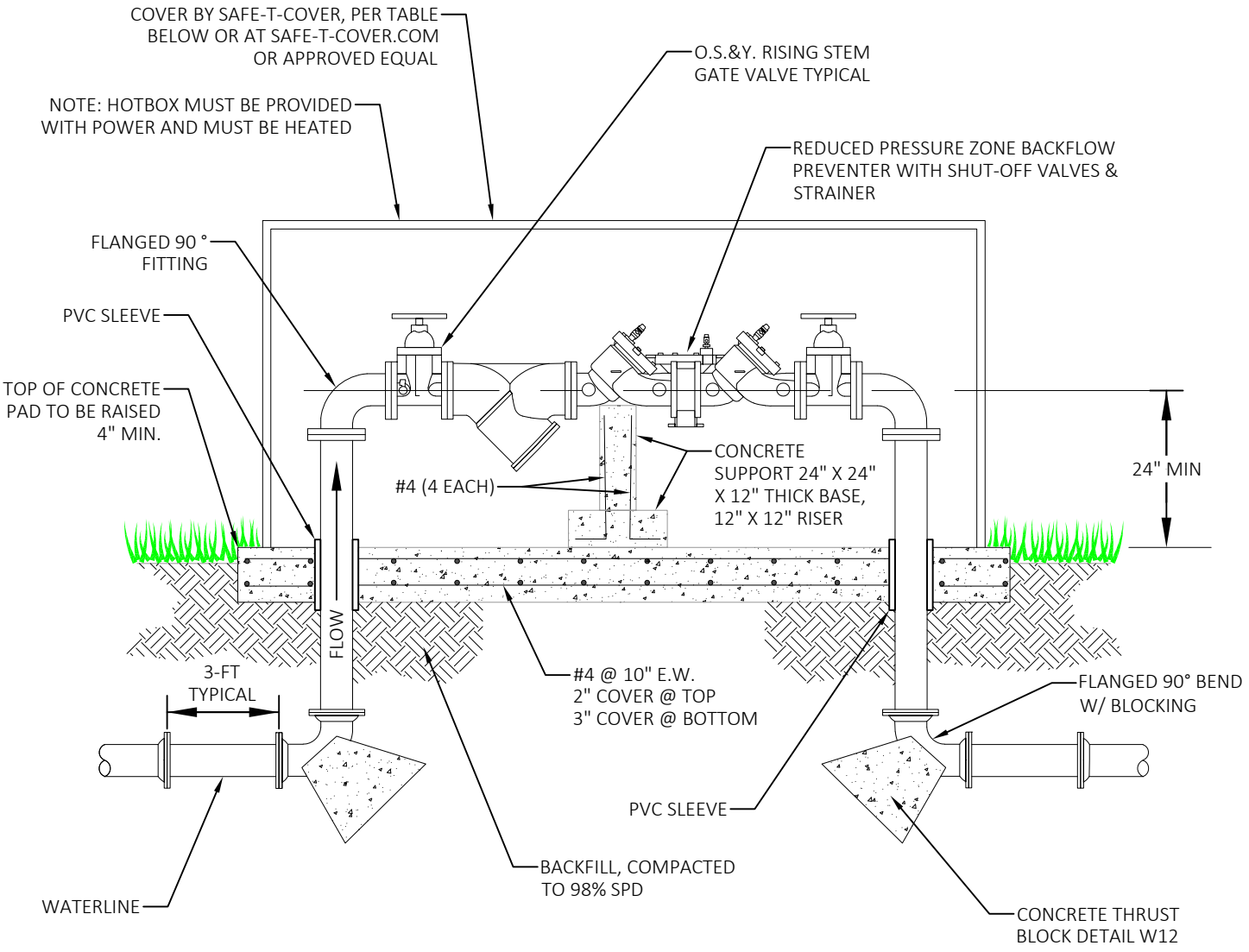

RPZ SIZE	WATTS RPZ MODEL NO.	HOT BOX MODEL	CONCRETE DIM (LxWxD)
4-INCH	LF909-NRS	400-AL	9'-0" X 3'-0" X 16"
6-INCH	LF909-NRS	600-AL	11-0" X 4'-0" X 16"
8-INCH	LF909-NRS	800-AL	13'-0" X 4'-0" X 16"
10-INCH	LF909-NRS	1000-AL	16'-0" X 4'-6" X 16"

NOTE:

1. NO PERMANENT STRUCTURES SHALL BE ALLOWED WITHIN 5 FEET OF RPZ.
2. TYPICAL INSTALLATION MAY BE MODIFIED AT THE DISCRETION OF THE SCWA.

SPALDING COUNTY WATER AUTHORITY

COMMERCIAL / INDUSTRIAL RPZ BACKFLOW PREVENTER

SPEC. DATE: 2026

REVISED: 09/2026

SCALE: N.T.S.

DETAIL NO.

W21

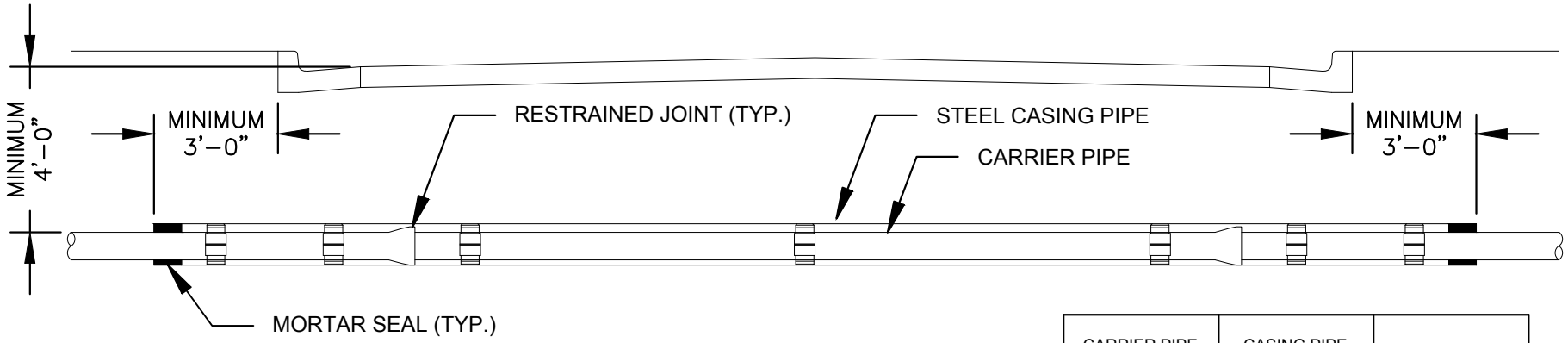

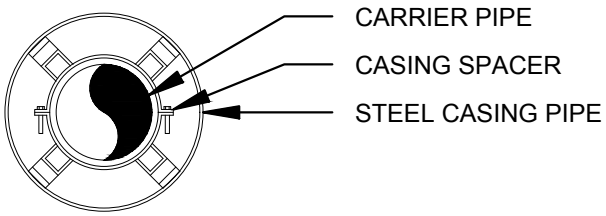

CARRIER PIPE NOMINAL DIAMETER (IN)	CASING PIPE NOMINAL DIAMETER (IN)	CASING PIPE THICKNESS (IN)
8	12	0.2500
10	16	0.2500
12	18	0.3130
16	24	0.3750

NOTES:

1. JOINTS INSIDE CASING PIPE SHALL BE RESTRAINED.
2. PROVIDE A MINIMUM OF 3 CASING SPACERS PER JOINT OF PIPE.
3. ENDS OF CASING PIPE SHALL BE SEALED WITH CEMENT MORTAR OR AS APPROVED BY SCWA.
4. ALL COUNTY ROAD CROSSINGS SHALL BE INSTALLED IN ACCORDANCE WITH SPALDING COUNTY DOT STANDARDS AND PERMIT REQUIREMENTS.
5. ALL STATE HIGHWAY CROSSINGS SHALL BE INSTALLED IN ACCORDANCE WITH GEORGIA DOT STANDARDS AND PERMIT REQUIREMENTS.
6. ALL RAILROAD CROSSINGS SHALL BE INSTALLED IN ACCORDANCE WITH AMERICAN RAILWAY ENGINEERING ASSOCIATION REGULATIONS AND IN ACCORDANCE WITH PERMIT REQUIREMENTS.

SPALDING COUNTY WATER AUTHORITY

TYPICAL JACK AND BORE DETAIL

SPEC. DATE: 2024

REVISED: N/A

SCALE: N.T.S.

DETAIL NO.

W22

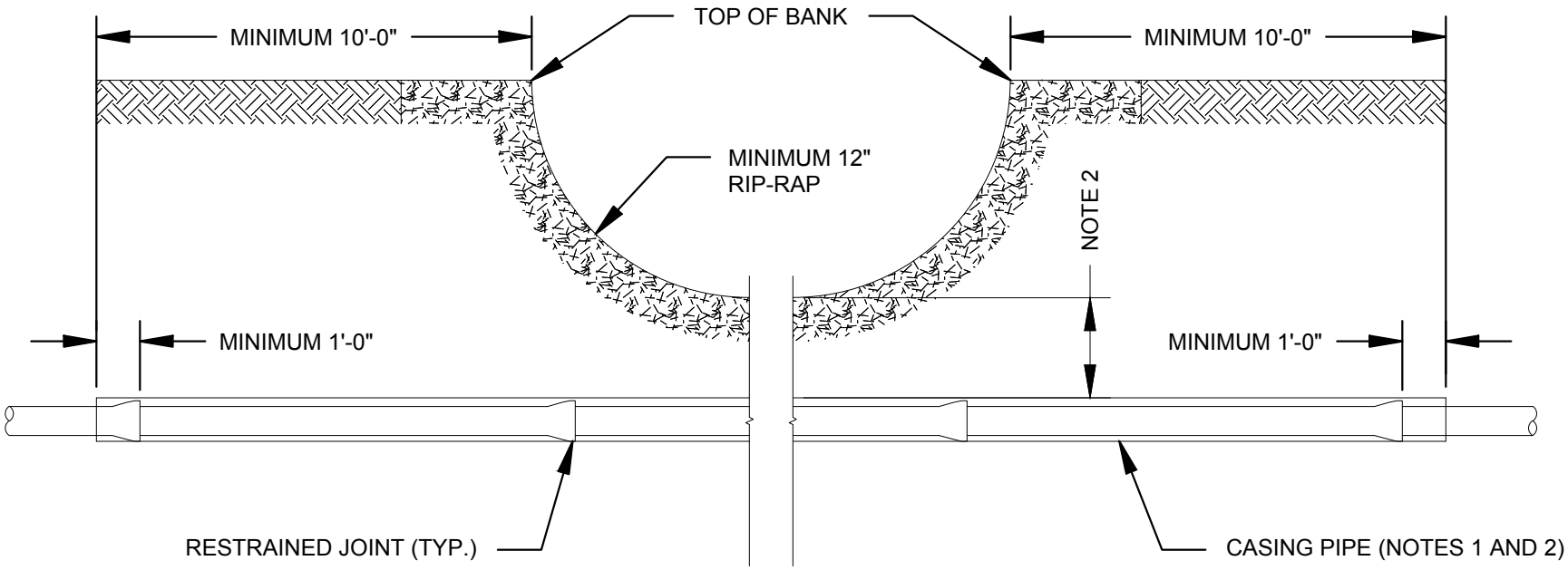

NOTES:

1. CASING PIPE IS REQUIRED WHEN DEPTH OF COVER IS LESS THAN 3 FEET FROM THE CREEK BOTTOM. MINIMUM 12" COVER TO TOP OF CASING.
2. REFER TO DETAIL W22 FOR CASING DIAMETER.
3. FOR OPEN CUT CREEK CROSSING INSTALLATION, PLACE STONE RIP-RAP A MINIMUM OF 5 FEET UPSTREAM AND 5 FEET DOWNSTREAM FROM CENTERLINE OF PIPE ALONG CREEK BED, HYDRAULIC CALCULATION SHOULD DETERMINE RIP-RAP SIZE AND LENGTH.

SPALDING COUNTY WATER AUTHORITY

SPEC. DATE: 2024

REVISED: N/A

SCALE: N.T.S.

CREEK CROSSING

DETAIL NO.

W23

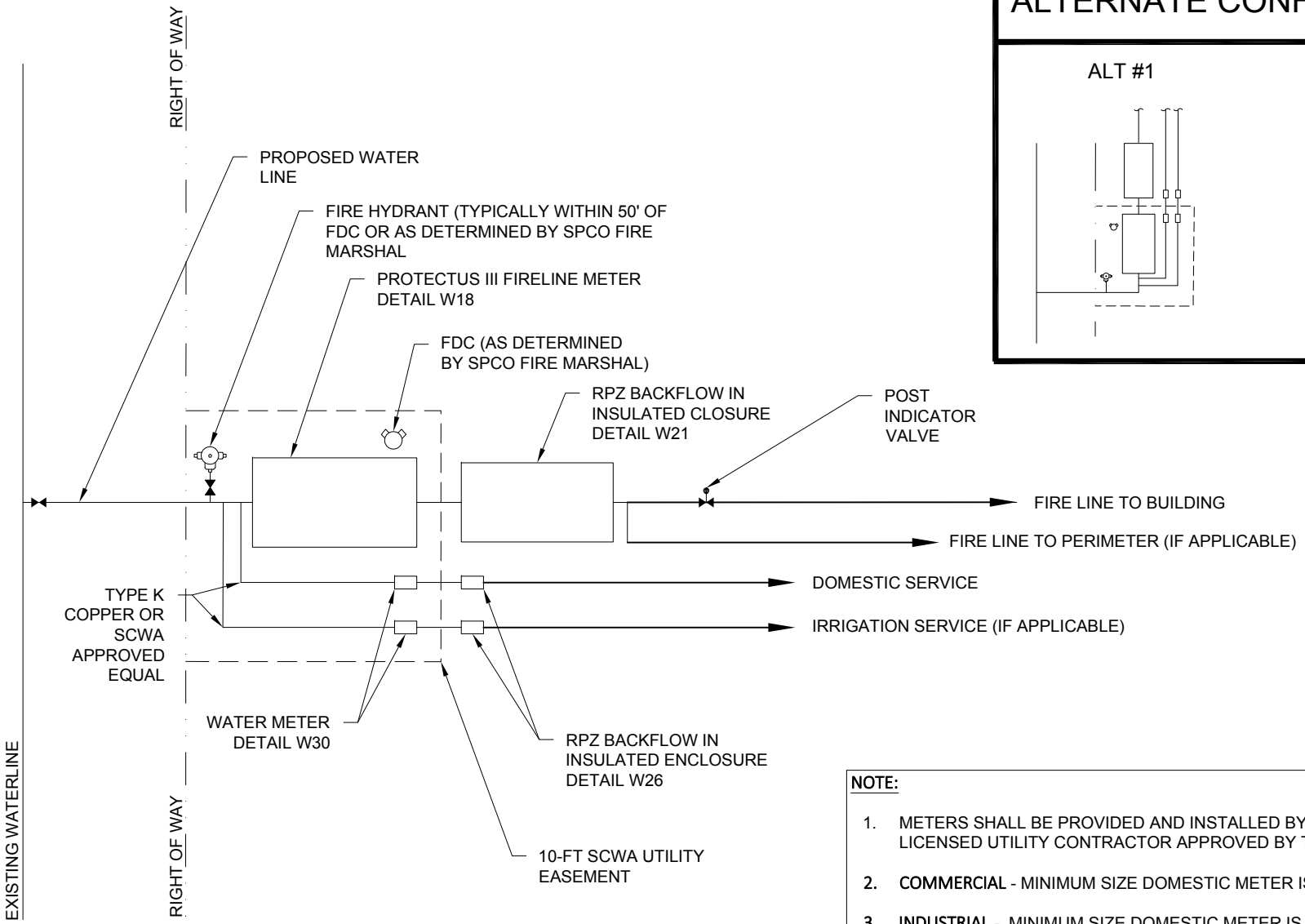

ALTERNATE CONFIGURATIONS

ALT #1

ALT #2

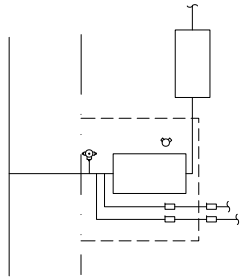

NOTE:

1. METERS SHALL BE PROVIDED AND INSTALLED BY A LICENSED UTILITY CONTRACTOR APPROVED BY THE SCWA.
2. COMMERCIAL - MINIMUM SIZE DOMESTIC METER IS 1-INCH
3. INDUSTRIAL - MINIMUM SIZE DOMESTIC METER IS 2-INCHES
4. ANY DEVIATION FROM SCWA STANDARDS SHALL BE APPROVED BY THE SCWA ENGINEER.

SPALDING COUNTY WATER AUTHORITY

TYPICAL COMMERCIAL / INDUSTRIAL METER CONFIGURATIONS

SPEC. DATE: 2026

REVISED: 09/2026

SCALE: N.T.S

DETAIL NO. W24

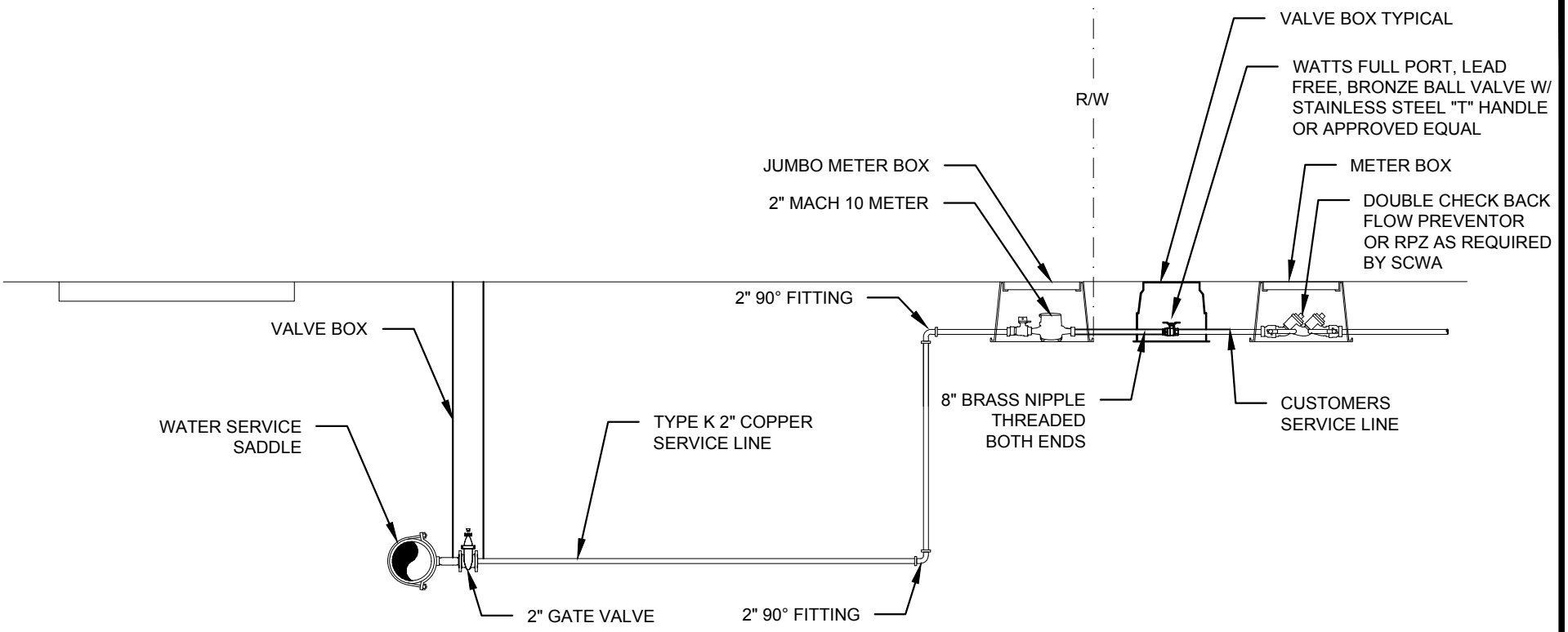

NOTES:

1. NO PERMANENT STRUCTURES SHALL BE ALLOWED WITHIN 5 FEET OF WATER SERVICE.
2. TYPICAL INSTALLATION MAY BE MODIFIED AT THE DISCRETION OF SCWA.
3. IF METER IS WITHIN R/W, UTILITY EASEMENT NOT REQUIRED.
4. ACTUAL PLACEMENT OF METER WILL BE DETERMINED BY SCWA REPRESENTATIVE.

SPALDING COUNTY WATER AUTHORITY

2 " METER INSTALLATION DETAIL

SPEC. DATE: 2024

REVISED: N/A

SCALE: N.T.S.

DETAIL NO.

W25

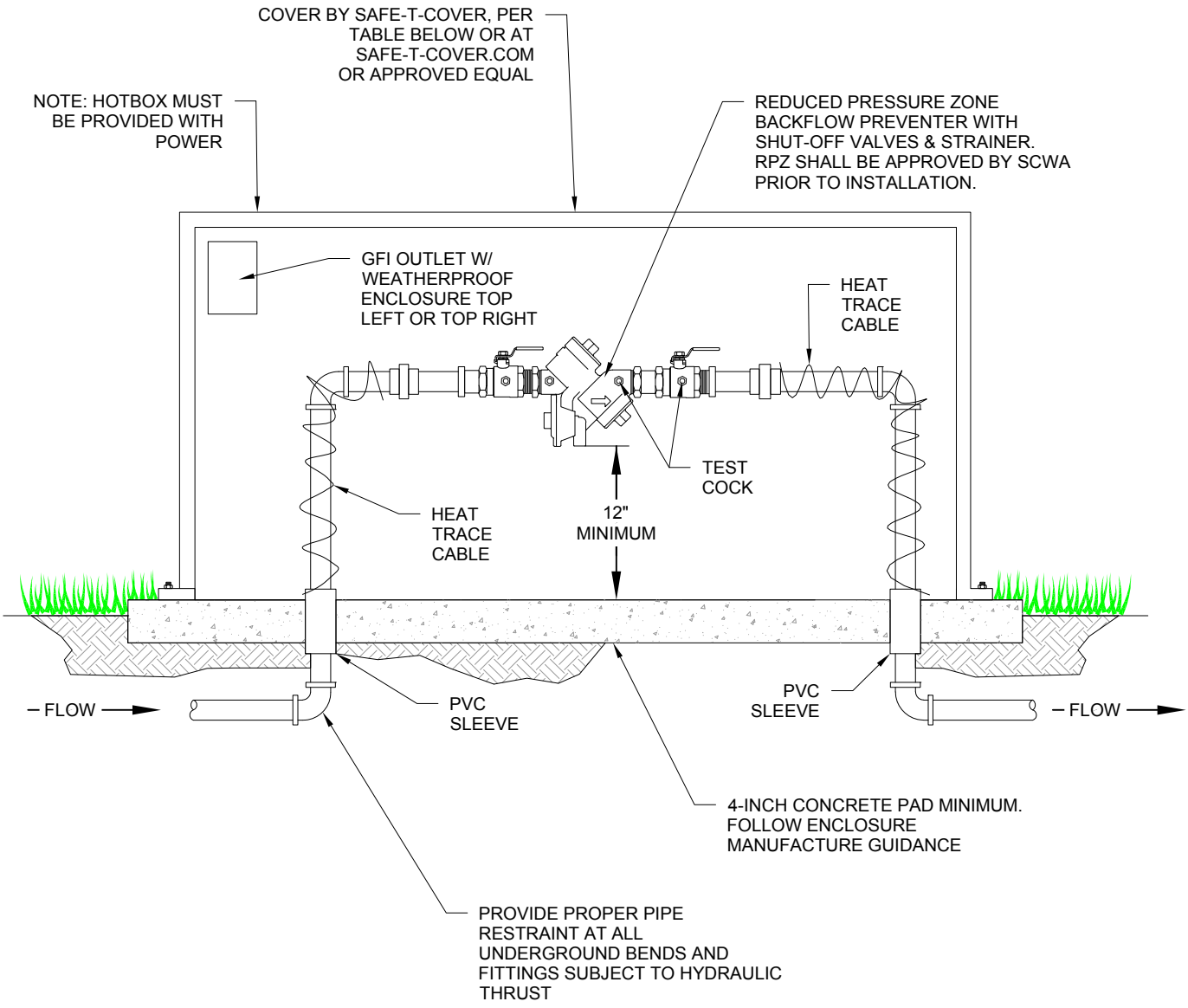

NOTE:

1. NO PERMANENT STRUCTURES SHALL BE ALLOWED WITHIN 5 FEET OF RPZ.
2. MINIMUM OF 4 TEST COCKS.
3. TYPICAL INSTALLATION MAY BE MODIFIED AT THE DISCRETION OF THE SCWA.
4. REFER TO ENCLOSURE MANUFACTURERS GUIDANCE ON POWER SERVICE REQUIREMENT.

SPALDING COUNTY WATER AUTHORITY

REDUCED PRESSURE ZONE FOR SERVICE LINES LESS THAN 4"

SPEC. DATE: 2026

REVISED: 11/2026

SCALE: N.T.S

DETAIL NO. W26

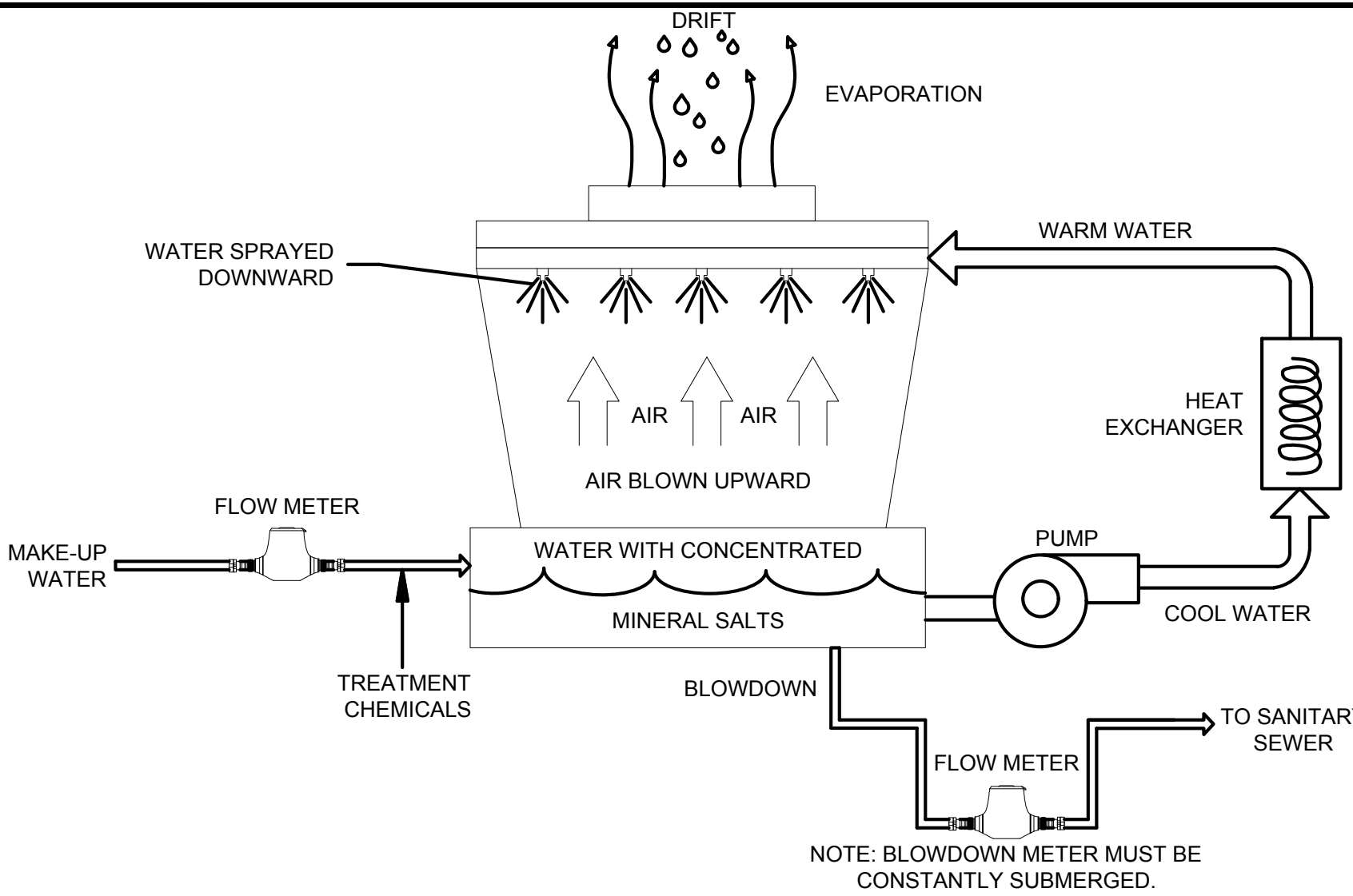

SPALDING COUNTY WATER AUTHORITY

COOLING TOWER METER CONFIGURATION

SPEC. DATE: 2024

REVISED: N/A

SCALE: N.T.S.

DETAIL NO.

W27

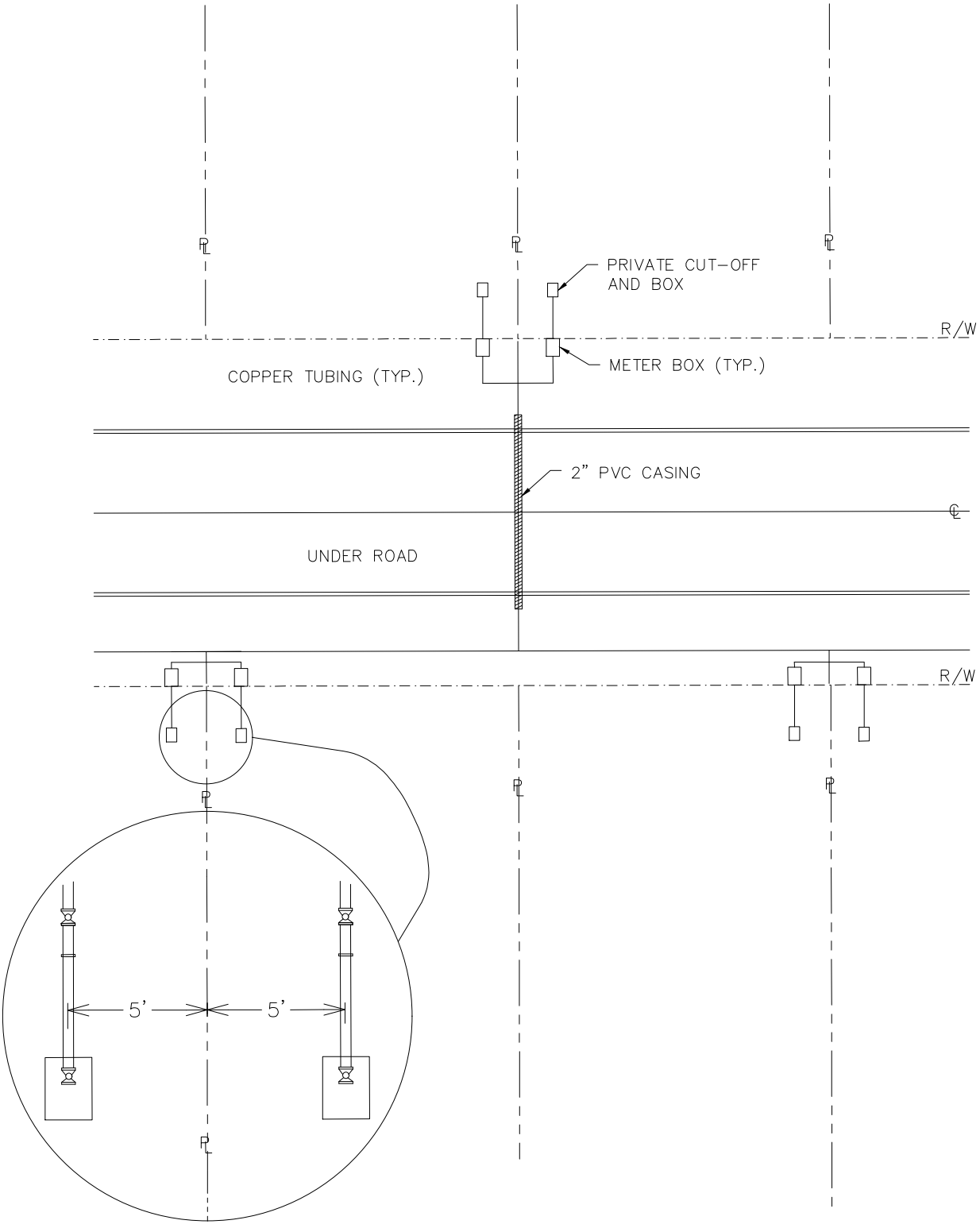

SPALDING COUNTY WATER AUTHORITY

SPEC. DATE: 2026

REVISED: N/A

SCALE: N.T.S.

WATER METER LOCATION FOR SUBDIVISION

DETAIL NO.

W28

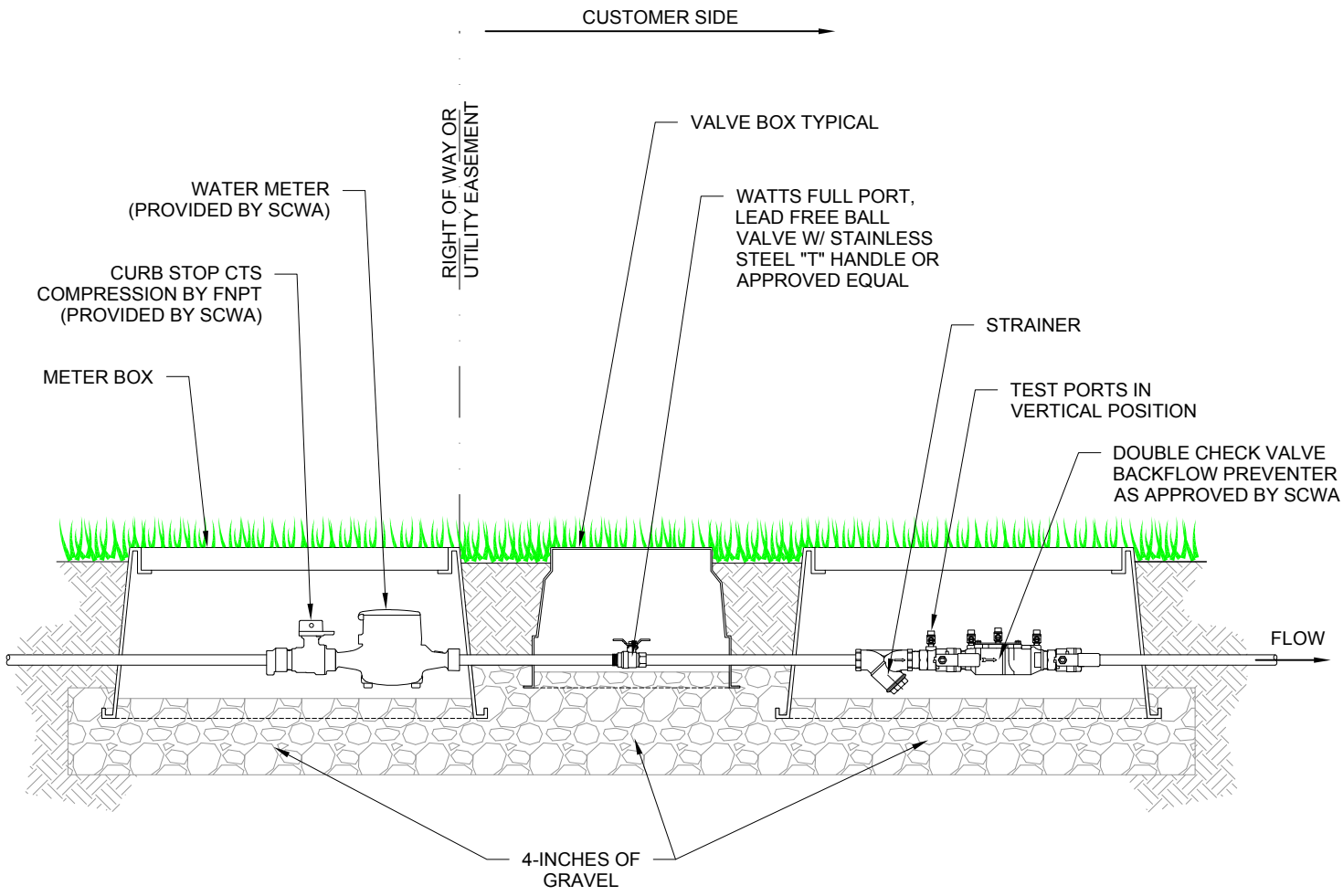

NOTE:

1. SCWA WILL PROVIDE RESIDENTIAL WATER METERS AND CURB STOP. ALL OTHER APPURTANCES SHALL BE PROVIDED BY THE DEVELOPER AND/OR CONTRACTOR.
2. WATER METER BOX AND LIDS SHALL HAVE 2-INCH DIAMETER HOLE OFFSET FOR TOUCH READ INSTALLATION.
3. EACH SERVICE SHALL BE MARKED WITH A "W" SAW CUT INTO THE TOP OF CURB AND PAINTED BLUE.
4. INSERT A 4-FOOT LONG PIECE OF PVC PIPE ADJACENT TO THE METER BOX TO MARK THE METER LOCATION. PAINT PVC PIPE BLUE.
5. THE HOLE IN THE METER BOX MUST BE PLUGGED WITH AN ANTENNA PLUG.
6. NO PERMANENT STRUCTURES SHALL BE LOCATED WITHIN 5+FEET OF WATER SERVICE.
7. TYPICAL INSTALLATION MAY BE MODIFIED AT DISCRETION OF SCWA.

SPALDING COUNTY WATER AUTHORITY

RESIDENTIAL IRRIGATION METER WITH TESTABLE BACKFLOW

SPEC. DATE: 2026

REVISED: 11/2026

SCALE: N.T.S

DETAIL NO. W29

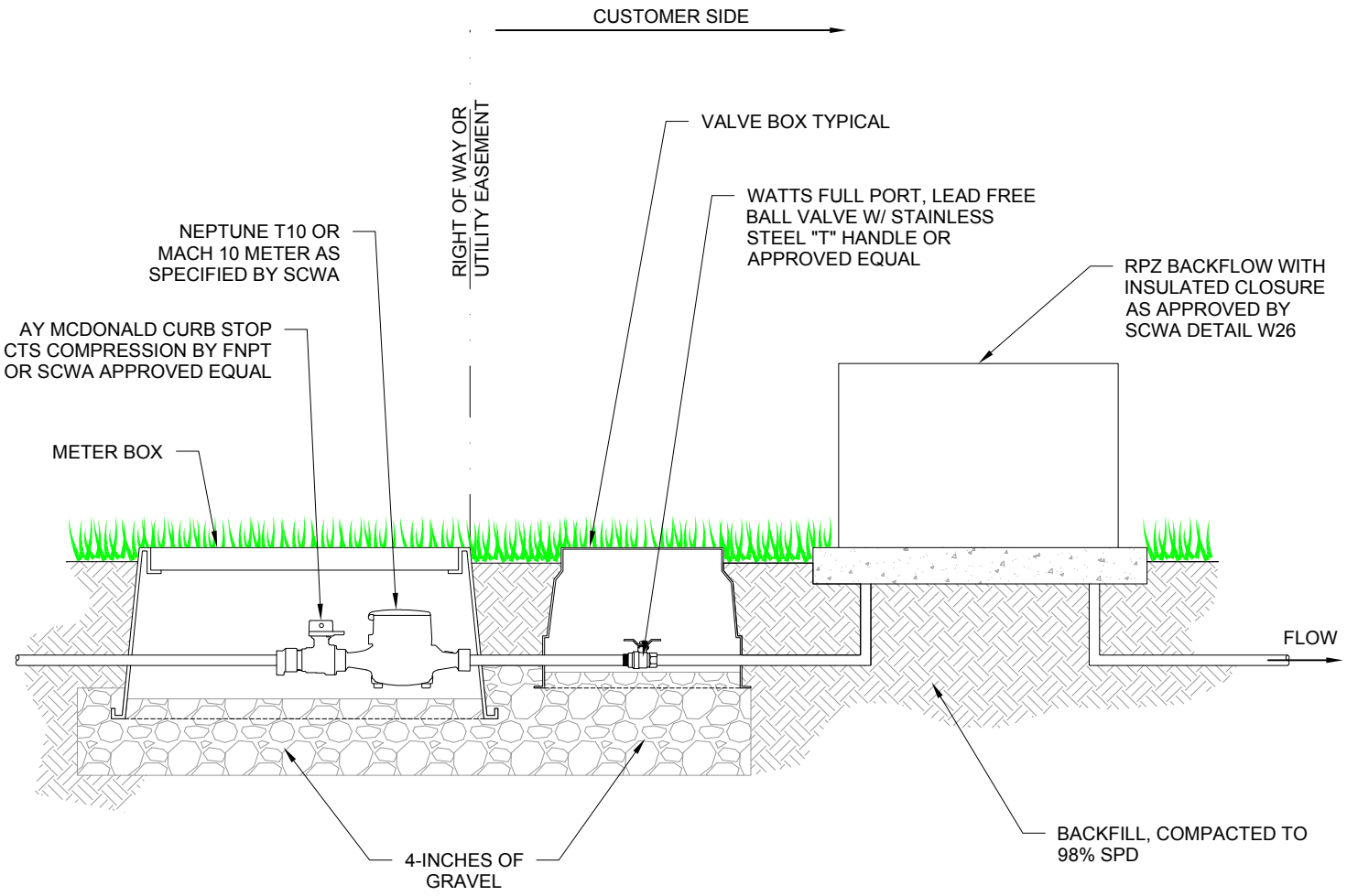

NOTE:

1. ALL MATERIALS SHALL BE PROVIDED BY THE DEVELOPER AND/OR CONTRACTOR.
2. MACH 10 METER SHALL BE USED FOR 2-INCH SERVICES.
3. TEST PORTS SHALL BE PROVIDED FOR 2-INCH SERVICES.
4. WATER METER BOX AND LIDS SHALL HAVE 2-INCH DIAMETER HOLE OFFSET FOR TOUCH READ INSTALLATION.
5. EACH SERVICE SHALL BE MARKED WITH A "W" SAW CUT INTO THE TOP OF CURB AND PAINTED BLUE.
6. INSERT A 4-FOOT LONG PIECE OF PVC PIPE ADJACENT TO THE METER BOX TO MARK THE METER LOCATION. PAINT PVC PIPE BLUE.
7. THE HOLE IN THE METER BOX MUST BE PLUGGED WITH AN ANTENNA PLUG.
8. NO PERMANENT STRUCTURES SHALL BE LOCATED WITHIN 5-FEET OF WATER SERVICE.
9. TYPICAL INSTALLATION MAY BE MODIFIED AT DISCRETION OF SCWA.

SPALDING COUNTY WATER AUTHORITY

COMMERCIAL / INDUSTRIAL DOMESTIC AND IRRIGATION METER

SPEC. DATE: 2026

REVISED: 11/2026

SCALE: N.T.S

DETAIL NO. W30

NOTES:

1. TAPPING SLEEVE SHALL BE STAINLESS STEEL AS MANUFACTURED BY FORD, SMITH-BLAIR, OR SCWSFA APPROVED EQUAL.
2. TAPPING SLEEVE SHALL BE OUTFITTED WITH A 360° GASKET. GASKET SHALL BE NSF/ANSI STANDARD 61 CERTIFIED, BUNA N.

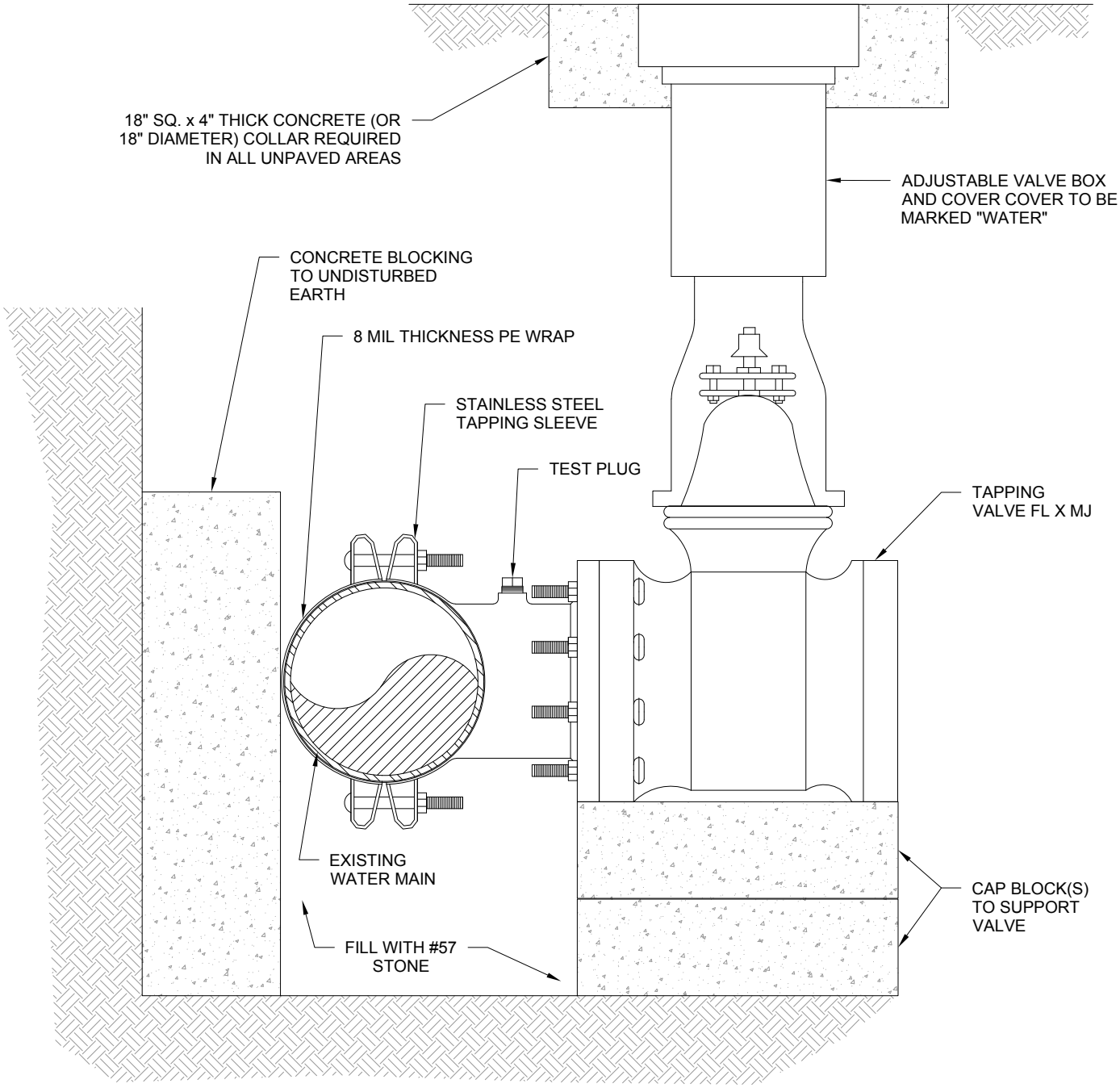

SPALDING COUNTY WATER AUTHORITY

TAPPING SLEEVE AND VALVE

SPEC. DATE: 2026

REVISED: 11/2026

SCALE: N.T.S

DETAIL NO. W31