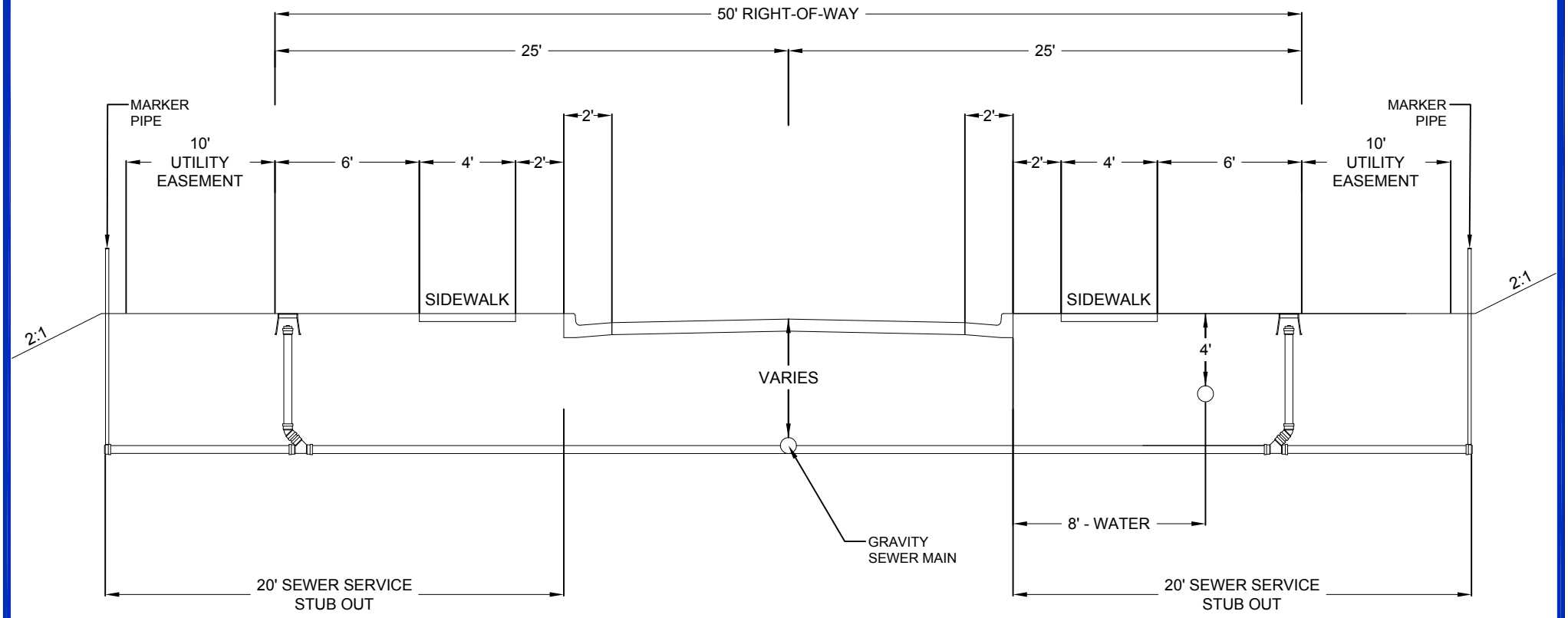

NOTES:

1. NO TREES OR FENCES ALLOWED WITHIN THE ROAD R/W OR UTILITY EASEMENT EXCEPT WHERE REQUIRED BY CITY, COUNTY, OR OTHER GOVERNMENT ORDINANCE.
2. ALL TREES SHALL BE CLEARED AND SHOULDERS GRADED WITHIN 6" OF FINAL GRADE (INCLUDING UTILITY EASEMENT) PRIOR TO INSTALLATION OF ANY UTILITIES.
3. UTILITY PLACEMENT SHALL REMAIN CONSISTENT FROM BACK OF CURB THROUGHOUT THE PROJECT REGARDLESS OF ANY INCONSISTENCIES IN ROAD CONSTRUCTION. EXAMPLES: STORM SEWERS, CULVERTS, CUL-DE-SACS, ETC...(EXCEPT CATV).
4. TOTAL CLEARED AND GRADED WIDTH TO BE SIXTY (60) FEET MINIMUM. ELECTRIC, GAS, TELEPHONE, AND CABLE TELEVISION SHALL BE PLACED WITHIN TEN (10) FOOT UTILITY EASEMENT.
5. PROPERTY CORNER REFERENCE SHALL BE PLACED ON CURB AND GUTTER AND ON TEN (10) FOOT OFFSET STAKE.
6. TEN (10) FOOT UTILITY EASEMENT SHALL BE SHOWN AND RECORDED ON THE FINAL PLAT AND PROVIDED TO SCWA.
7. WATER METER BOXES SHALL BE LOCATED AT EDGE OF R/W.
8. SEWER SERVICE SHALL BE STUBBED OUT TWENTY (20) FEET FROM BACK OF CURB.
9. WATER LATERALS SHALL BE MARKED WITH A BLUE "W" ON CURB.
10. SEWER LATERALS SHALL BE MARKED WITH A GREEN "X" ON CURB.
11. DEPTH REQUIREMENTS INDICATE MINIMUM DEPTH AT TIME OF INSTALLATION BELOW CURB LINE.
12. THESE STANDARDS MAY BE COMBINED WITH GOVERNING ROADWAY JURISDICTION UTILITY PLACEMENT STANDARDS.
13. UTILITIES SHALL BE LOCATED WITHIN PLUS/MINUS 6" OF APPROVED PLAN LOCATION UNLESS APPROVED BY SCWA.
14. SEWER CLEAN OUT SHALL BE PROVIDED AT R/W LINE FOR EVERY SERVICE. NO COMBINED SEWER LATERALS ARE ALLOWED MAINTAIN MINIMUM EIGHTEEN (18) INCHES VERTICAL SEPARATION BETWEEN WATER AND SEWER AT ALL CROSSINGS. WATERLINE SHALL BE ABOVE SEWER.
15. ALL METER BOXES WITHIN TRAFFIC/DRIVE AREAS SHALL BE RATED FOR H-20 LOAD CAPACITY.

spalding county SCWA water authority

SPALDING COUNTY WATER AUTHORITY

RESIDENTIAL UTILITY PLACEMENT FOR ROAD WITH 50' RIGHT-OF-WAY

SPEC. DATE: 2026

REVISED: 11/2026

SCALE: N.T.S

DETAIL NO.
G06

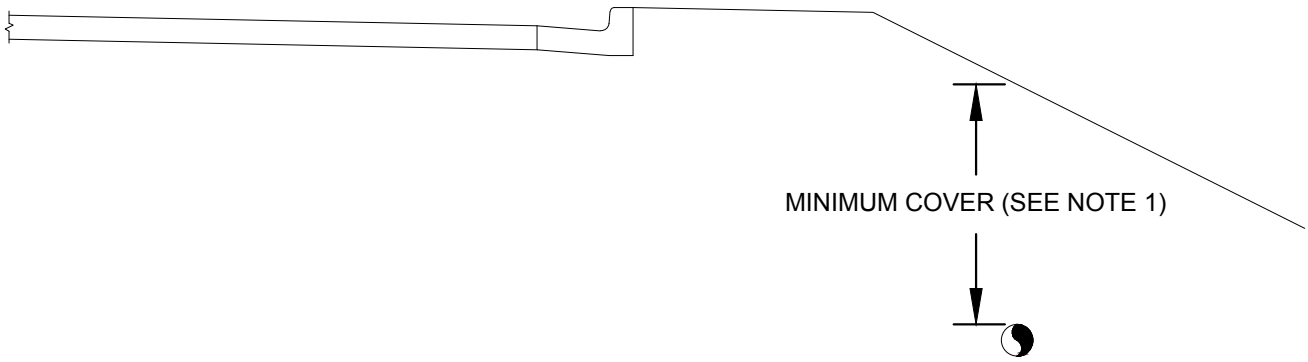

PIPE DEPTH WITH DECLINING GRADE AT EDGE OF PAVEMENT

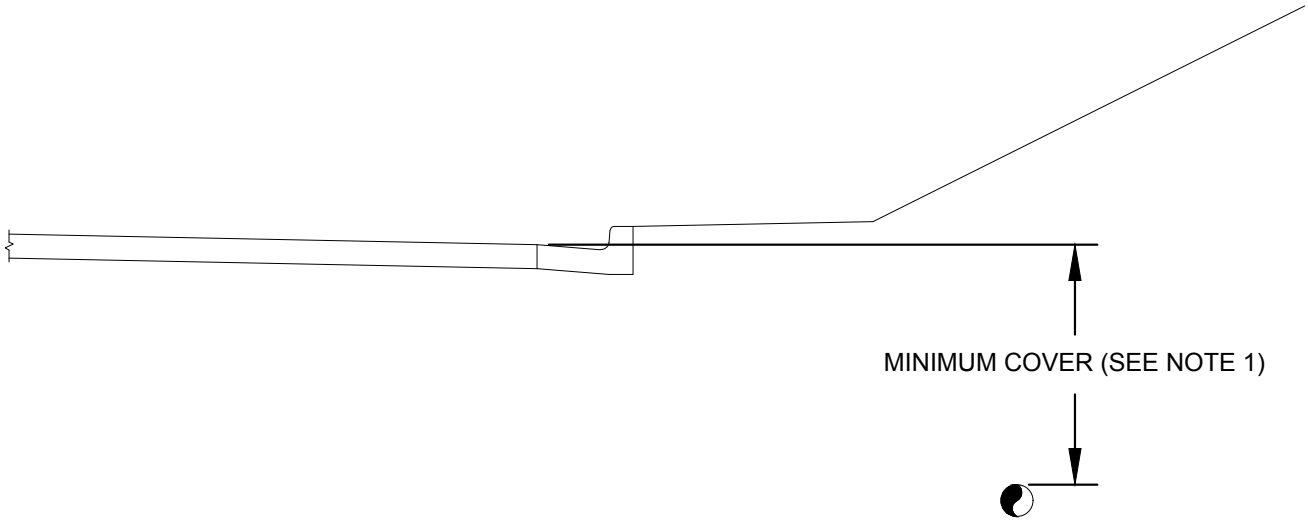

PIPE DEPTH WITH INCREASING GRADE AT EDGE OF PAVEMENT

NOTES:

1. SANITARY SEWER GRAVITY MAINS SHALL HAVE A MINIMUM COVER OF 4'-0" AND SANITARY SEWER FORCE MAINS SHALL HAVE A MINIMUM COVER OF 5'-0" UNLESS OTHERWISE APPROVED BY SCWA.

spalding county SCWA water authority	SPALDING COUNTY WATER AUTHORITY	SPEC. DATE: 2024
	PIPE DEPTH AT EDGE OF PAVEMENT	REVISED: N/A
		SCALE: N.T.S.
		DETAIL NO. S02

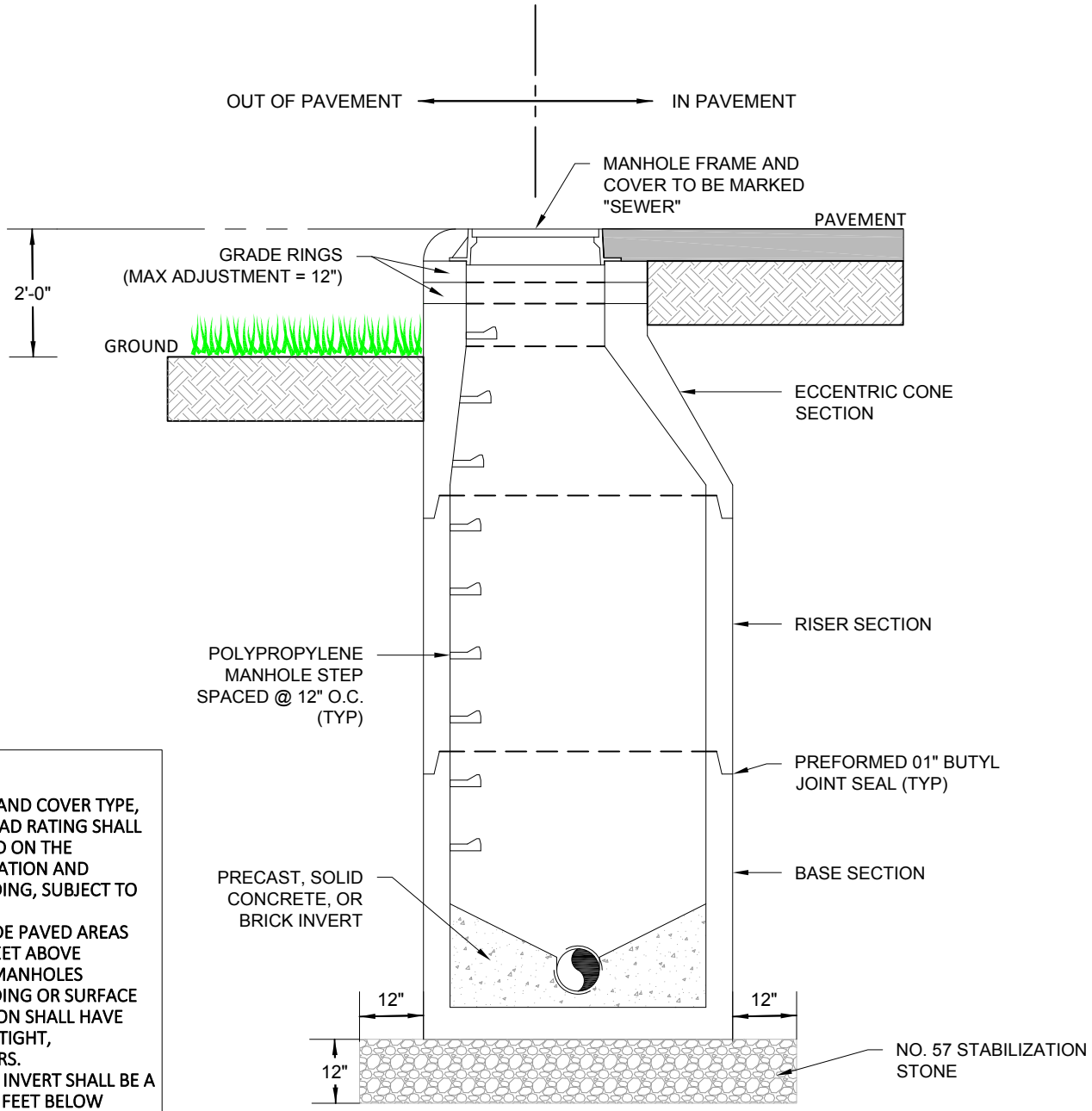

NOTE:

1. MANHOLE FRAME AND COVER TYPE, MATERIAL, AND LOAD RATING SHALL BE SELECTED BASED ON THE INSTALLATION LOCATION AND ANTICIPATED LOADING, SUBJECT TO SCWA APPROVAL.
2. MANHOLES OUTSIDE PAVED AREAS SHALL EXTEND 2 FEET ABOVE FINISHED GRADE. MANHOLES SUBJECT TO FLOODING OR SURFACE WATER INFILTRATION SHALL HAVE GASKETED, WATERTIGHT, BOLT-DOWN COVERS.
3. OUTGOING SEWER INVERT SHALL BE A MINIMUM OF 0.10 FEET BELOW INCOMING SEWER INVERT. PROVIDE A SMOOTH, CONTINUOUS FLOW CHANNEL THROUGH THE MANHOLE.
4. PROVIDE A MINIMUM 12-INCH LAYER OF NO. 57 STONE, EXTENDING 12 INCHES BEYOND THE MANHOLE BASE. COMPACT SUBGRADE AND BACKFILL TO 95% STANDARD PROCTOR IN TRAFFIC AREAS AND 90% IN NON-TRAFFIC AREAS (ASTM D698). UNSUITABLE SUBGRADE SHALL BE CORRECTED AS DIRECTED BY THE ENGINEER AND APPROVED BY SCWA.
5. MANHOLE DEPTHS 20 FEET AND GREATER SHALL HAVE A MINIMUM DIAMETER OF 60". MANHOLE DIAMETER SHALL REMAIN CONSTANT THROUGHOUT ITS DEPTH.

SEWER PIPE DIAMETER	MINIMUM MANHOLE DIAMETER
8" - 10"	48"
12" - 24"	60"
GREATER THAN 24"	MANHOLE SPECIFICALLY DESIGNED AND APPROVED BY SCWA

SPALDING COUNTY WATER AUTHORITY

STANDARD SANITARY SEWER MANHOLE

SPEC. DATE: 2026

REVISED: N/A

SCALE: N.T.S

DETAIL NO. S03

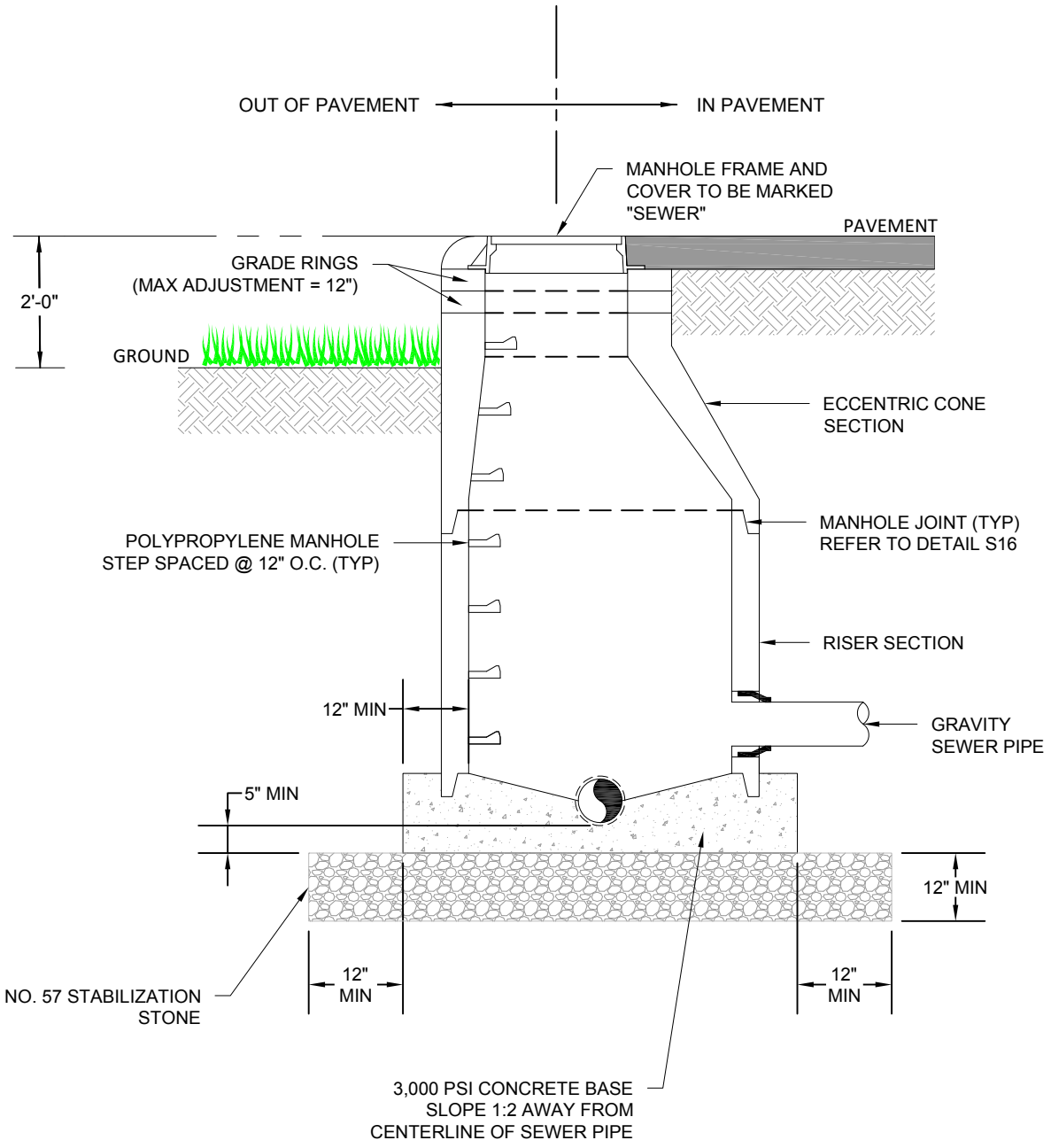

NOTES:

1. ALL JOINTS AROUND EXISTING AND PROPOSED SEWER LINE SHALL BE GROUTED WATERTIGHT.
2. AFTER DOGHOUSE MANHOLE CONSTRUCTION IS COMPLETE, TOP HALF OF EXISTING SEWER LINE SHALL BE CUT OUT USING A METHOD APPROVED BY THE SCWA INSPECTOR.
3. MANHOLES LOCATED OUTSIDE OF PAVEMENT SHALL HAVE WATER TIGHT BOLT-DOWN LIDS AND 2 FEET ABOVE FINISHED GRADE WITH FRAME CAST INTO THE CONE SECTION.
4. IN DRIVEWAYS OR R/W COMPACT SUBGRADE TO 95% STANDARD PROCTOR / PROVIDE CONCRETE LEVELING PAD WHERE SOILS ARE POOR. IN YARDS, COMPACT SUBGRADE TO 90% STANDARD PROCTOR.
5. REFER TO DETAIL S10 FOR MANHOLE LIDS ON SCWA-OWNED AND OPERATED MANHOLES.
6. REFER TO DETAIL S10.1 FOR MANHOLE LIDS ON ALL OTHER MANHOLES.

SPALDING COUNTY WATER AUTHORITY

SANITARY SEWER DOGHOUSE MANHOLE

SPEC. DATE: 2026

REVISED: N/A

SCALE: N.T.S

DETAIL NO. S05

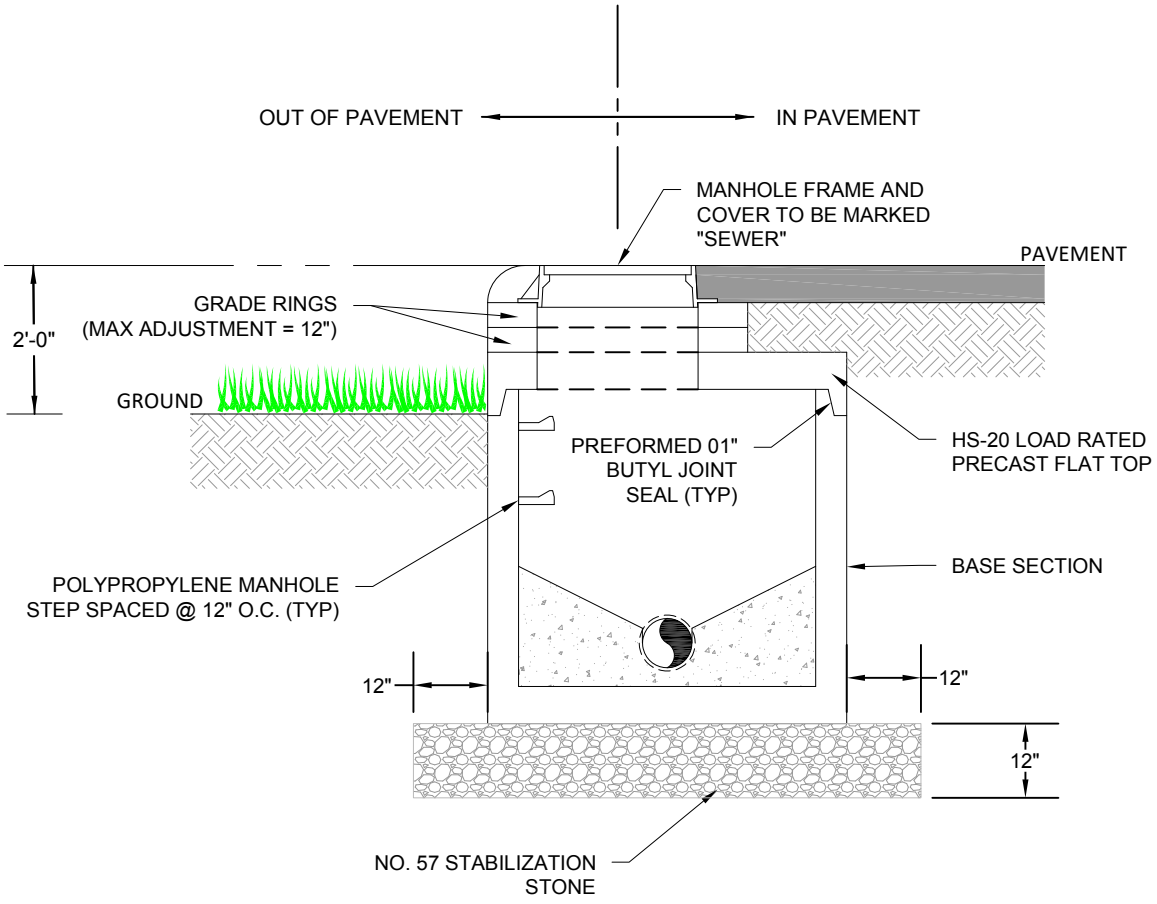

NOTES:

1. MANHOLES LOCATED OUTSIDE OF PAVED AREAS SHALL BE EQUIPPED WITH WATERTIGHT, BOLT-DOWN LIDS. THE TOP OF THE MANHOLE FRAME SHALL EXTEND A MINIMUM OF 2 FEET ABOVE FINISHED GRADE, WITH THE FRAME CAST INTO THE CONE SECTION.
2. SHALLOW MANHOLES WITHIN PAVEMENT SHALL HAVE HS-20 LOAD RATED PRECAST FLAT TOP.
3. IN DRIVEWAYS OR R/W COMPACT SUBGRADE TO 95% STANDARD PROCTOR / PROVIDE CONCRETE LEVELING PAD WHERE SOILS ARE POOR. IN YARDS, COMPACT SUBGRADE TO 90% STANDARD PROCTOR.
4. REFER TO DETAIL S10 FOR MANHOLE LIDS ON SCWA-OWNED AND OPERATED MANHOLES.
5. REFER TO DETAIL S10.1 FOR MANHOLE LIDS ON ALL OTHER MANHOLES.

spalding county SCWA water authority

SPALDING COUNTY WATER AUTHORITY

SHALLOW SANITARY SEWER MANHOLE

SPEC. DATE: 2026

REVISED: N/A

SCALE: N.T.S

DETAIL NO. S06

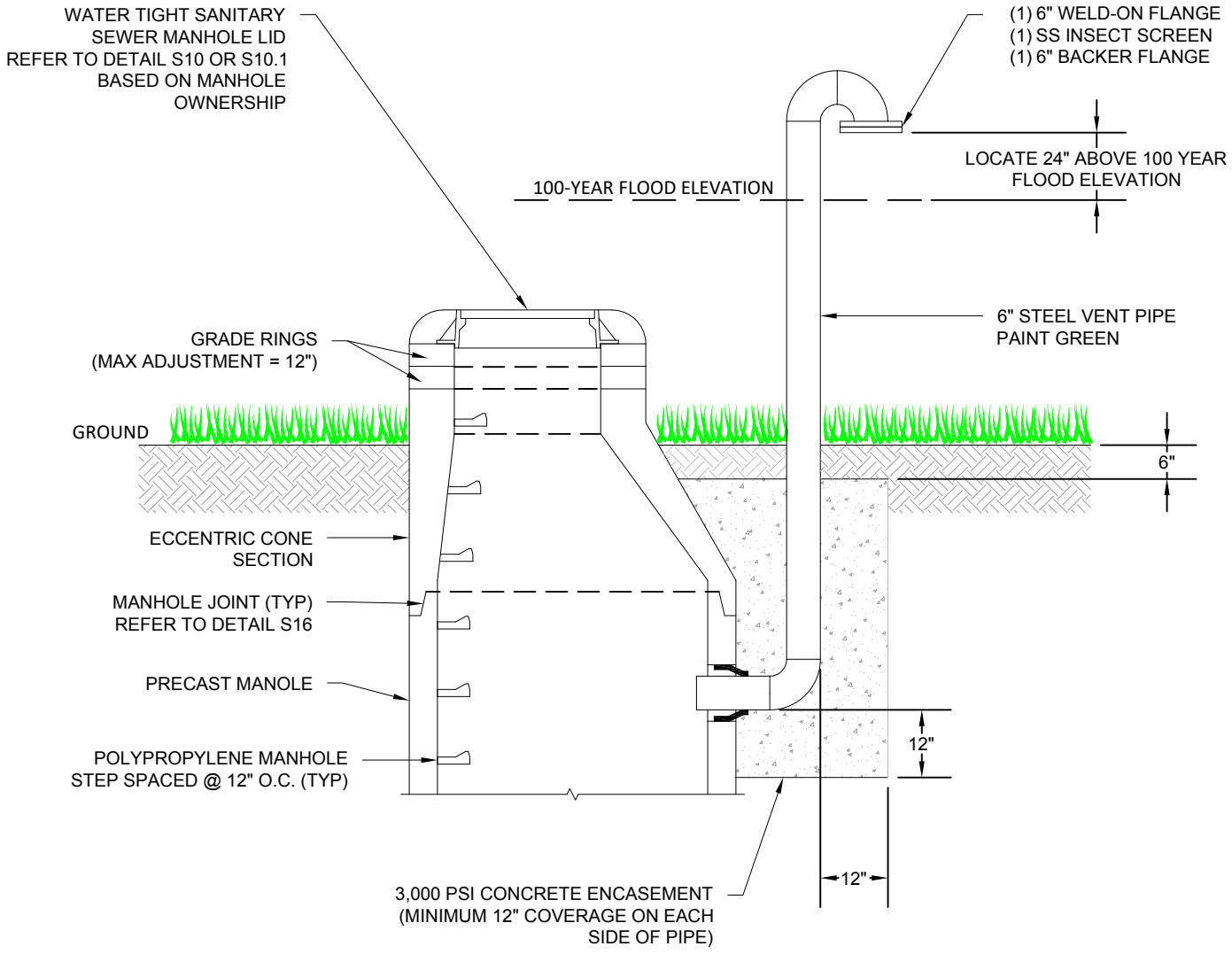

NOTES:

1. MANHOLES LOCATED OUTSIDE OF PAVED AREAS SHALL BE EQUIPPED WITH WATERTIGHT, BOLT-DOWN LIDS. THE TOP OF THE MANHOLE FRAME SHALL EXTEND A MINIMUM OF 2 FEET ABOVE FINISHED GRADE, WITH THE FRAME CAST INTO THE CONE SECTION.
2. REFER TO DETAIL S10 FOR MANHOLE LIDS ON SCWA-OWNED AND OPERATED MANHOLES.
3. REFER TO DETAIL S10.1 FOR MANHOLE LIDS ON ALL OTHER MANHOLES.

SPALDING COUNTY WATER AUTHORITY

SANITARY SEWER MANHOLE VENT

SPEC. DATE: 2026

REVISED: N/A

SCALE: N.T.S

DETAIL NO. S07

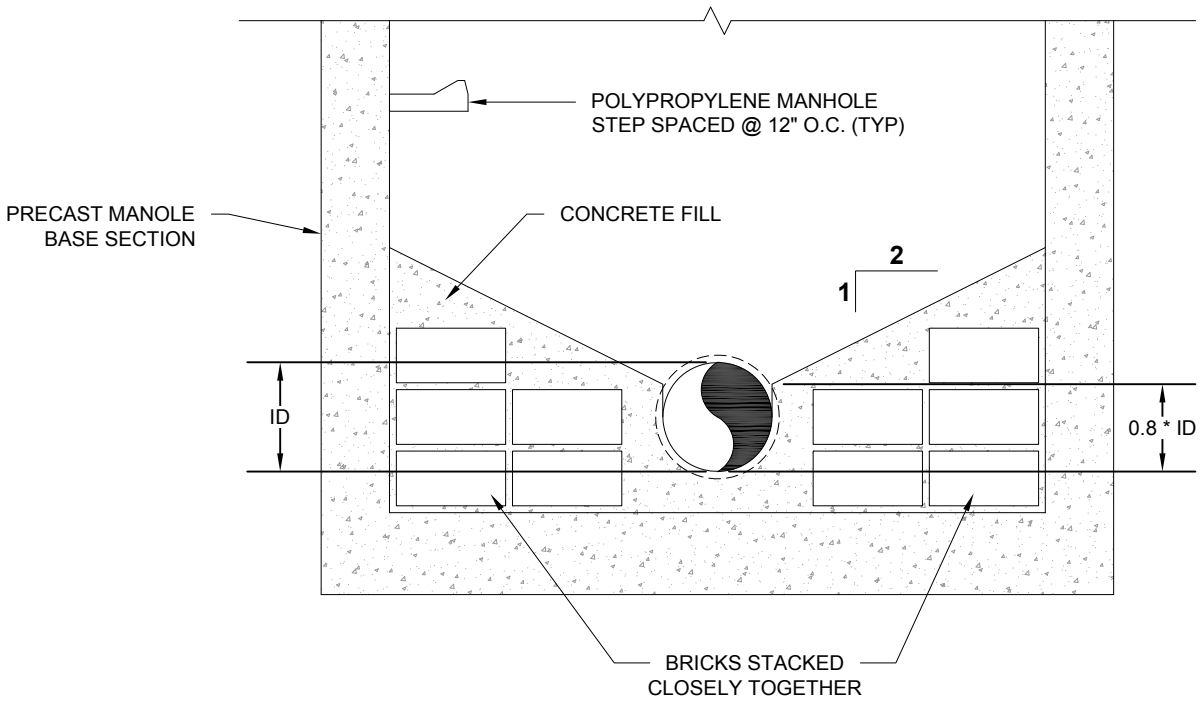

NOTES:

1. CONCRETE FILL SHALL BE 3 PARTS SAND TO 1 PART CEMENT.
2. BRICK SHALL BE COMMON SMOOTH RED BRICK.
3. PROVIDE A MINIMUM OF 2" OF COVER OVER BRICK.

SPALDING COUNTY WATER AUTHORITY

STANDARD MANHOLE INVERT

SPEC. DATE: 2026

REVISED: N/A

SCALE: N.T.S

DETAIL NO.
S08

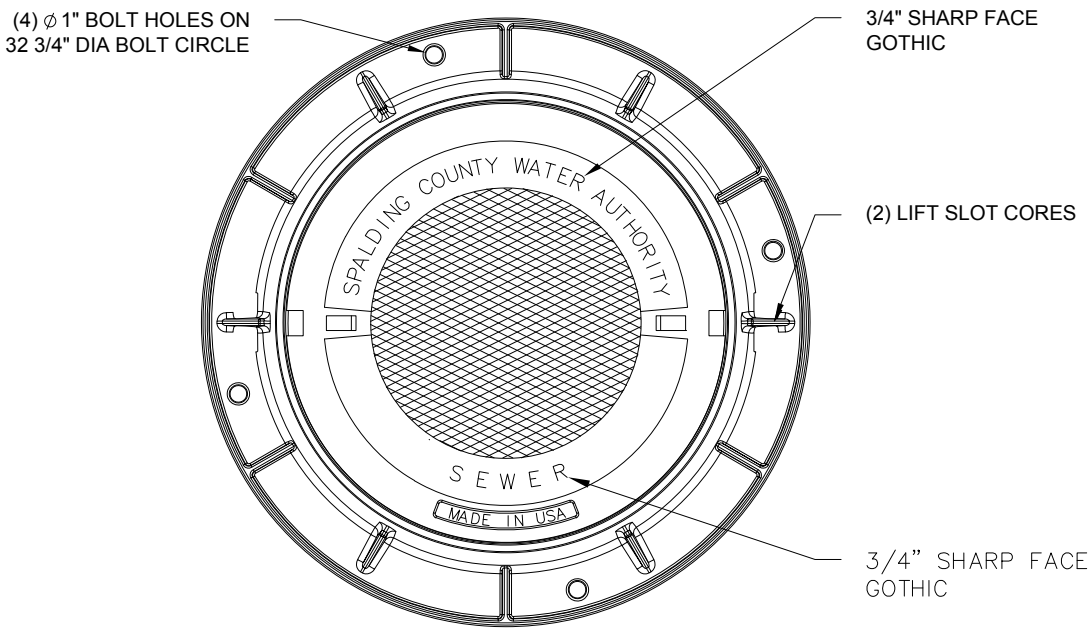

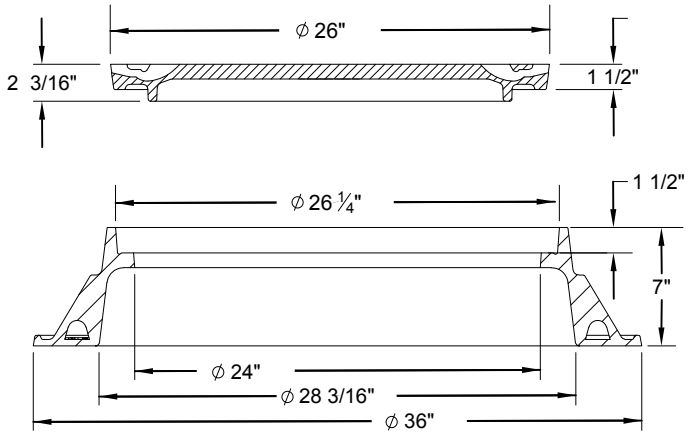

NOTES:

1. SCWA BRANDED MANHOLES LIDS SHALL BE USED FOR ALL MANHOLES OWNED AND MAINTAINED BY SCWA.
2. MANHOLE FRAME AND COVER SHALL BE:
   - 2.1. CAST IRON: FOR GENERAL MANHOLE LID APPLICATIONS
     COVER: EAST JORDAN IRON WORKS PRODUCT NUMBER: **001040734**
     FRAME: EAST JORDAN IRON WORKS PRODUCT NUMBER: **00104511**
   - 2.2. HEAVY DUTY DUCTILE IRON: FOR TRAFFIC RATED MANHOLE LID APPLICATIONS
     COVER: EAST JORDAN IRON WORKS PRODUCT NUMBER: **00190595**
     FRAME: EAST JORDAN IRON WORKS PRODUCT NUMBER: **00104511**
   - 2.3. COMPOSITE: FOR CORROSION RESISTANT MANHOLE LID APPLICATIONS
     COVER: EAST JORDAN IRON WORKS PRODUCT NUMBER: **COM104098**
     FRAME: EAST JORDAN IRON WORKS PRODUCT NUMBER: **COM104098**
3. BEARING SURFACES SHALL BE MACHINED.

SPALDING COUNTY WATER AUTHORITY

STANDARD SANITARY SEWER MANHOLE LID (SCWA BRANDED)

SPEC. DATE: 2026
REVISED: N/A
SCALE: N.T.S
DETAIL NO. S09

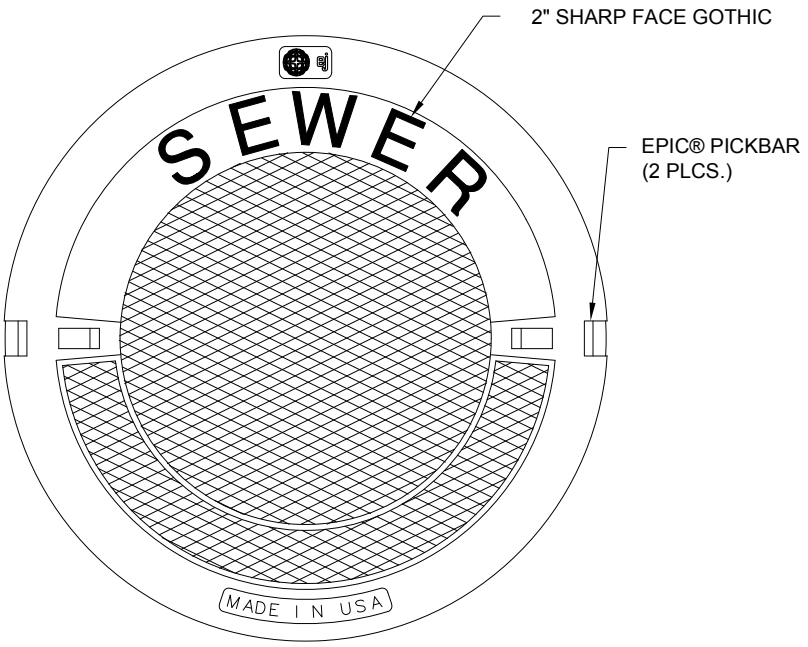

PLAN VIEW

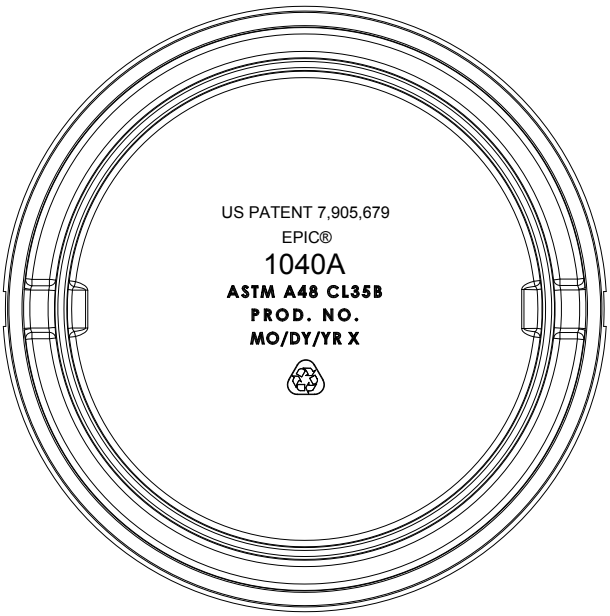

BOTTOM VIEW

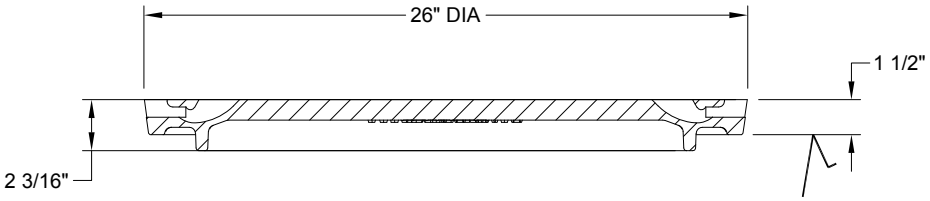

COVER SECTION

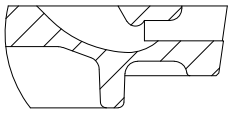

EPIC® DETAIL

NOTES:

1. PRIVATELY OWNED AND OPERATED MANHOLES SHALL BE GENERIC SEWER LIDS AS MANUFACTURED BY EAST JORDAN IRON WORKS.
2. MANHOLE FRAME AND COVER SHALL BE:
   - 2.1. CAST IRON: FOR GENERAL MANHOLE LID APPLICATIONS
     COVER: EAST JORDAN IRON WORKS PRODUCT NUMBER: **00104134** OR SCWA APPROVED EQUAL.
     FRAME: EAST JORDAN IRON WORKS PRODUCT NUMBER: **00104511** OR SCWA APPROVED EQUAL.
   - 2.2. HEAVY DUTY DUCTILE IRON: FOR TRAFFIC RATED MANHOLE LID APPLICATIONS
     COVER: EAST JORDAN IRON WORKS PRODUCT NUMBER: **00190580W01** OR SCWA APPROVED EQUAL.
     FRAME: EAST JORDAN IRON WORKS PRODUCT NUMBER: **00104511** OR SCWA APPROVED EQUAL.
   - 2.3. COMPOSITE: FOR CORROSION RESISTANT MANHOLE LID APPLICATIONS
     COVER: EAST JORDAN IRON WORKS PRODUCT NUMBER: **COM260234A01** OR SCWA APPROVED EQUAL.
     FRAME: EAST JORDAN IRON WORKS PRODUCT NUMBER: **COM260234A01** OR SCWA APPROVED EQUAL.
3. BEARING SURFACES SHALL BE MACHINED.

spalding county SCWA water authority

SPALDING COUNTY WATER AUTHORITY

STANDARD SANITARY SEWER MANHOLE LID (GENERIC)

SPEC. DATE: 2026

REVISED: N/A

SCALE: N.T.S

DETAIL NO.
S09.1

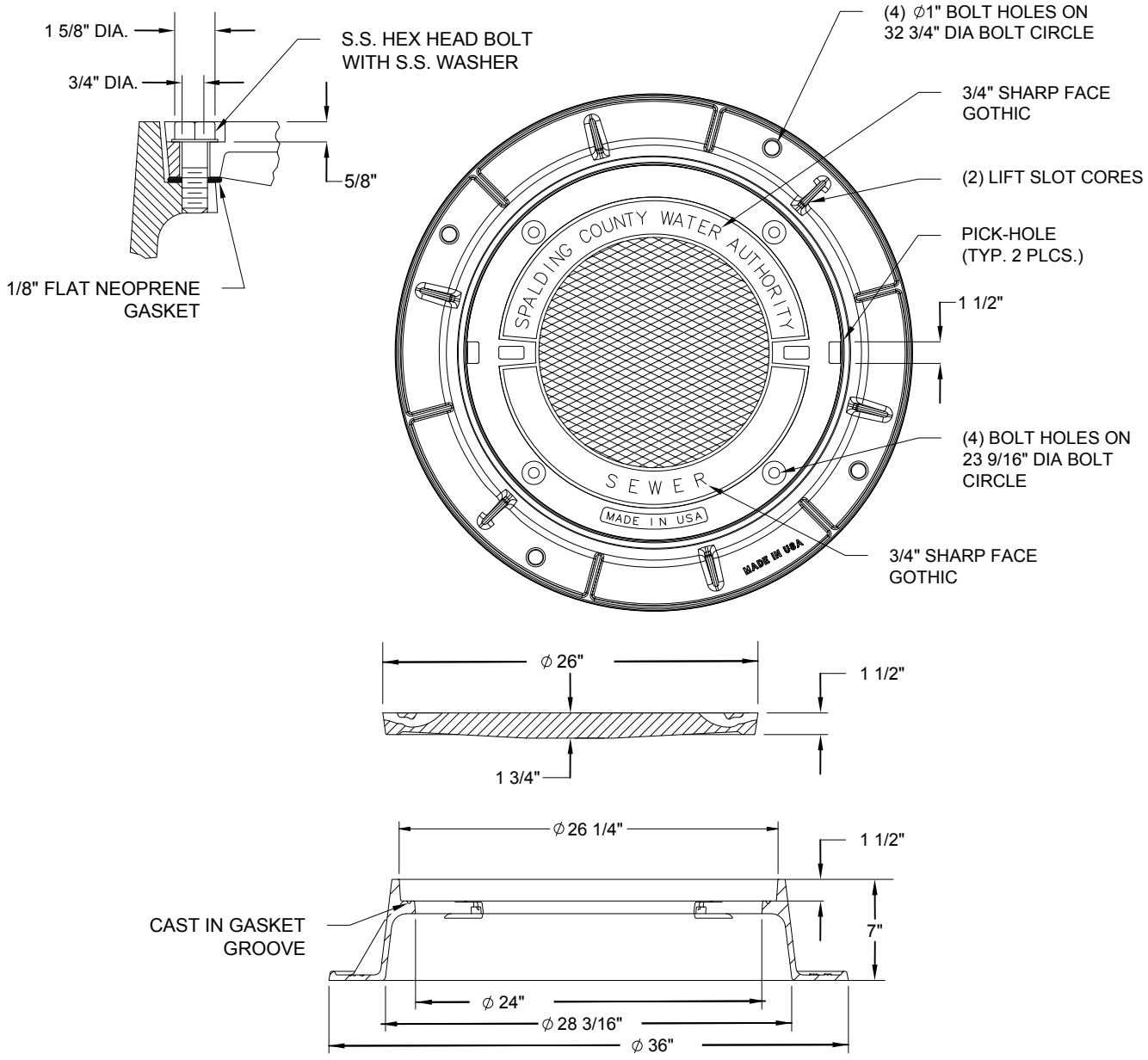

NOTES:

1. SCWA BRANDED MANHOLES LIDS SHALL BE USED FOR ALL MANHOLES OWNED AND MAINTAINED BY SCWA.
2. MANHOLE FRAME AND COVER SHALL BE:
   - 2.1. CAST IRON: FOR GENERAL MANHOLE LID APPLICATIONS
     COVER: EAST JORDAN IRON WORKS PRODUCT NUMBER: **001040734**
     FRAME: EAST JORDAN IRON WORKS PRODUCT NUMBER: **00104511**
   - 2.2. HEAVY DUTY DUCTILE IRON: FOR TRAFFIC RATED MANHOLE LID APPLICATIONS
     COVER: EAST JORDAN IRON WORKS PRODUCT NUMBER: **00190595**
     FRAME: EAST JORDAN IRON WORKS PRODUCT NUMBER: **00104511**
   - 2.3. COMPOSITE: FOR CORROSION RESISTANT MANHOLE LID APPLICATIONS
     COVER: EAST JORDAN IRON WORKS PRODUCT NUMBER: **COM104098**
     FRAME: EAST JORDAN IRON WORKS PRODUCT NUMBER: **COM104098**
3. BEARING SURFACES SHALL BE MACHINED.

SPALDING COUNTY WATER AUTHORITY

WATERTIGHT SANITARY SEWER MANHOLE LID (SCWA BRANDED)

SPEC. DATE: 2026

REVISED: N/A

SCALE: N.T.S

DETAIL NO.
S10

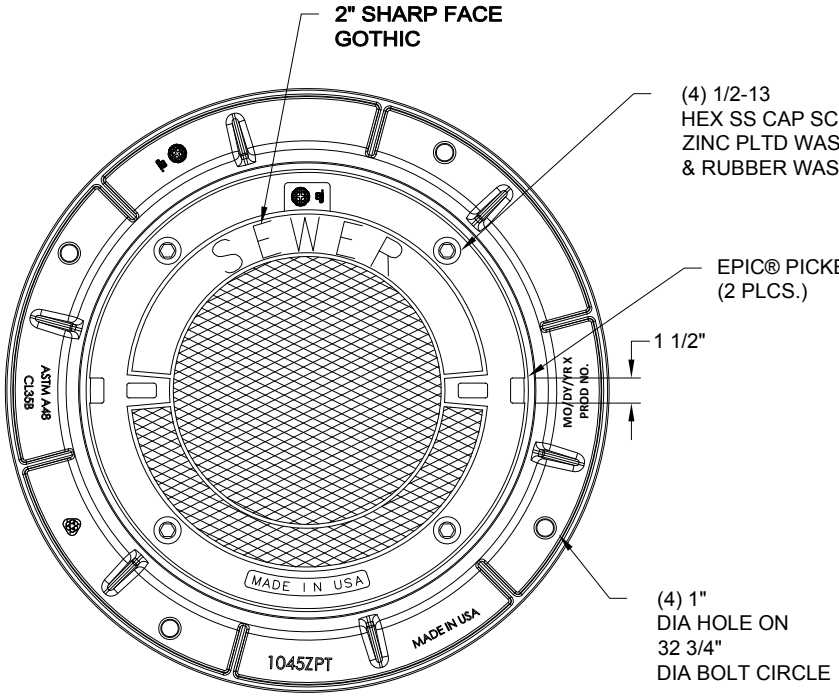

PLAN VIEW

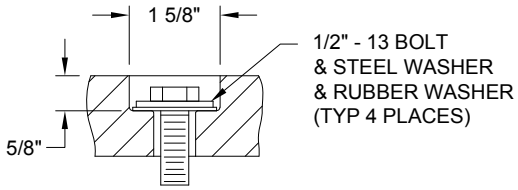

BOLT DETAIL

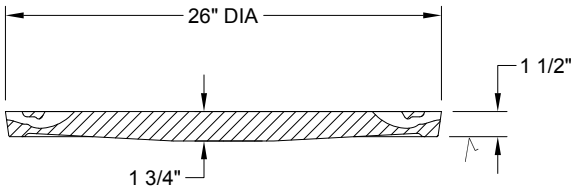

COVER SECTION

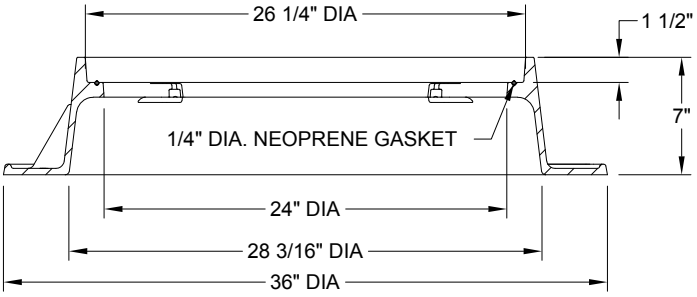

FRAME SECTION

NOTES:

1. PRIVATELY OWNED AND OPERATED MANHOLES SHALL BE GENERIC SEWER LIDS AS MANUFACTURED BY EAST JORDAN IRON WORKS.
2. MANHOLE FRAME AND COVER SHALL BE:
   - 2.1. CAST IRON: FOR GENERAL MANHOLE LID APPLICATIONS
     COVER: EAST JORDAN IRON WORKS PRODUCT NUMBER: **00104134** OR SCWA APPROVED EQUAL.
     FRAME: EAST JORDAN IRON WORKS PRODUCT NUMBER: **00104511** OR SCWA APPROVED EQUAL.
   - 2.2. HEAVY DUTY DUCTILE IRON: FOR TRAFFIC RATED MANHOLE LID APPLICATIONS
     COVER: EAST JORDAN IRON WORKS PRODUCT NUMBER: **00190580W01** OR SCWA APPROVED EQUAL.
     FRAME: EAST JORDAN IRON WORKS PRODUCT NUMBER: **00104511** OR SCWA APPROVED EQUAL.
   - 2.3. COMPOSITE: FOR CORROSION RESISTANT MANHOLE LID APPLICATIONS
     COVER: EAST JORDAN IRON WORKS PRODUCT NUMBER: **COM260234A01** OR SCWA APPROVED EQUAL.
     FRAME: EAST JORDAN IRON WORKS PRODUCT NUMBER: **COM260234A01** OR SCWA APPROVED EQUAL.
3. BEARING SURFACES SHALL BE MACHINED.

spalding county SCWA water authority

SPALDING COUNTY WATER AUTHORITY

WATERTIGHT SANITARY SEWER MANHOLE LID (GENERIC)

SPEC. DATE: 2026

REVISED: N/A

SCALE: N.T.S

DETAIL NO.
S10.1

2600 DUROSTREET® Composite Assembly

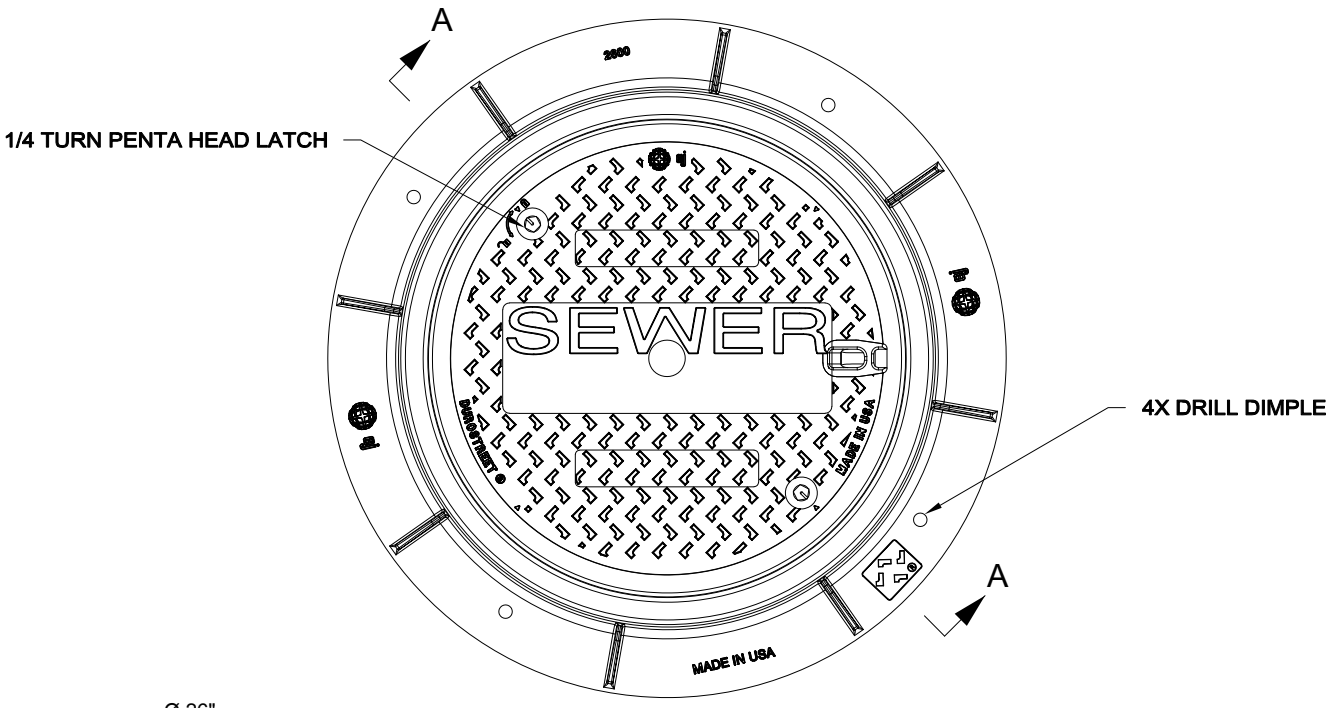

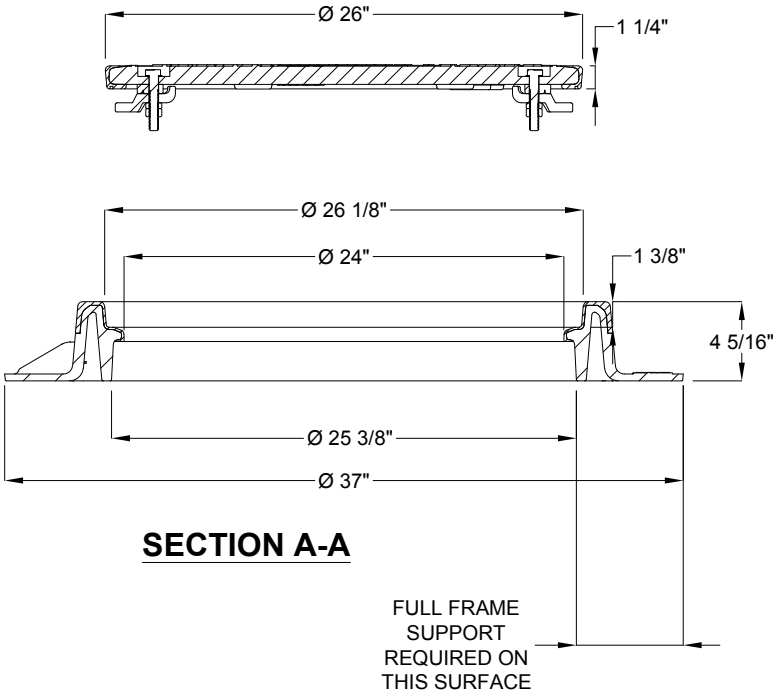

SECTION A-A

NOTES:

1. PRIVATELY OWNED AND OPERATED MANHOLES SHALL BE GENERIC SEWER LIDS AS MANUFACTURED BY EAST JORDAN IRON WORKS.
2. MANHOLE FRAME AND COVER SHALL BE:
   - 2.1. CAST IRON: FOR GENERAL MANHOLE LID APPLICATIONS
     COVER: EAST JORDAN IRON WORKS PRODUCT NUMBER: **00104134** OR SCWA APPROVED EQUAL.
     FRAME: EAST JORDAN IRON WORKS PRODUCT NUMBER: **00104511** OR SCWA APPROVED EQUAL.
   - 2.2. HEAVY DUTY DUCTILE IRON: FOR TRAFFIC RATED MANHOLE LID APPLICATIONS
     COVER: EAST JORDAN IRON WORKS PRODUCT NUMBER: **00190580W01** OR SCWA APPROVED EQUAL.
     FRAME: EAST JORDAN IRON WORKS PRODUCT NUMBER: **00104511** OR SCWA APPROVED EQUAL.
   - 2.3. COMPOSITE: FOR CORROSION RESISTANT MANHOLE LID APPLICATIONS
     COVER: EAST JORDAN IRON WORKS PRODUCT NUMBER: **COM260234A01** OR SCWA APPROVED EQUAL.
     FRAME: EAST JORDAN IRON WORKS PRODUCT NUMBER: **COM260234A01** OR SCWA APPROVED EQUAL.
3. BEARING SURFACES SHALL BE MACHINED.

spalding county SCWA water authority

SPALDING COUNTY WATER AUTHORITY

COMPOSITE SANITARY SEWER MANHOLE LID (GENERIC)

SPEC. DATE: 2026

REVISED: N/A

SCALE: N.T.S

DETAIL NO. S11.1

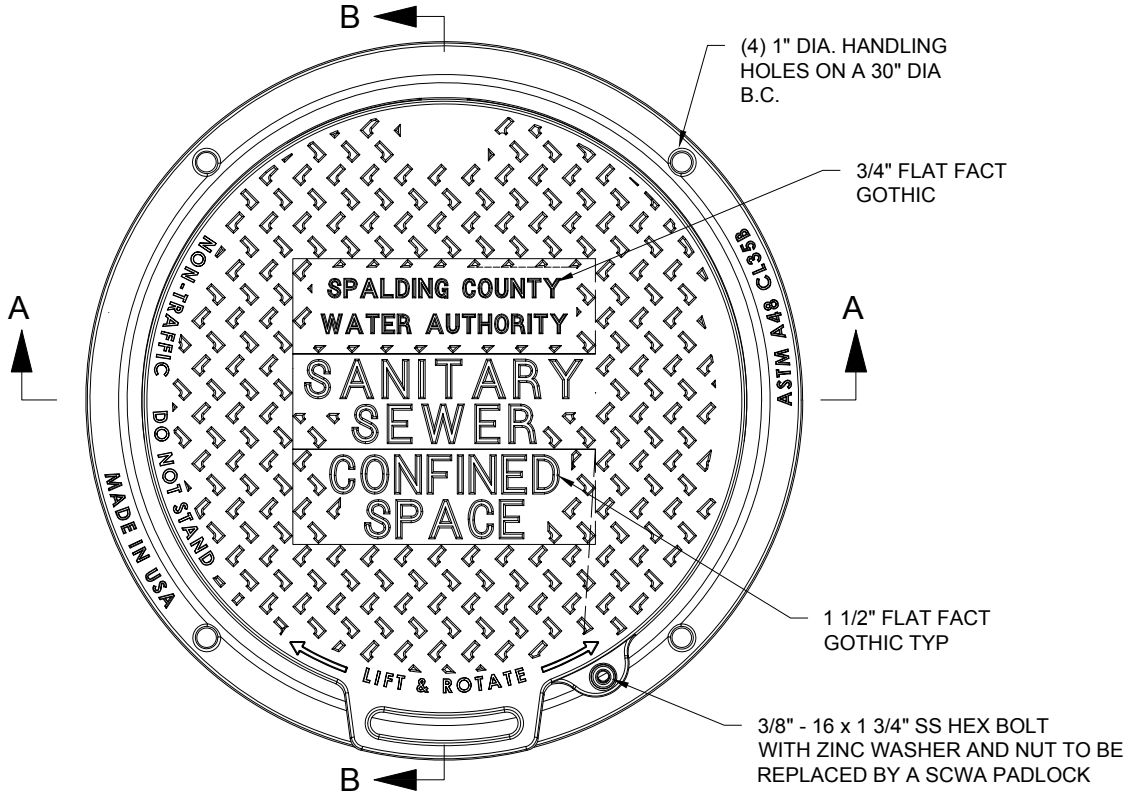

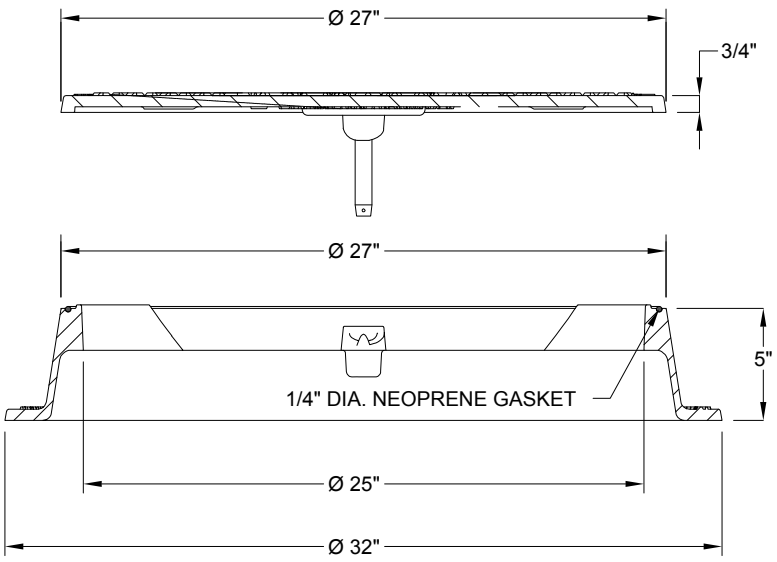

SECTION A-A

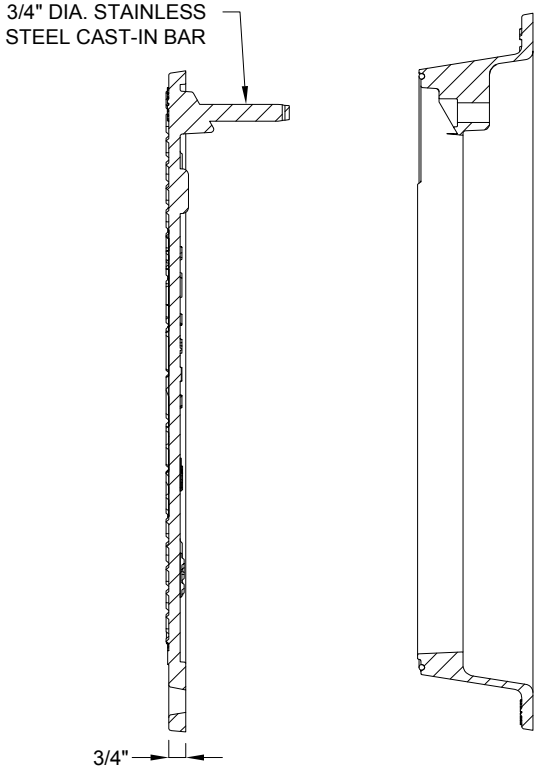

SECTION B-B

NOTES:
1. MANHOLE LIDS WITH RIM ELEVATIONS 3 FEET OR MORE ABOVE FINAL GRADE SHALL UTILIZE ARTICULATING COVER.
2. ARTICULATING MANHOLE FRAME AND COVER SHALL BE:
   2.1. EAST JORDAN IRON WORKS PRODUCT NUMBER: **NPR25-001917-03726**

SPALDING COUNTY WATER AUTHORITY

ARTICULATING SANITARY SEWER MANHOLE LID (SCWA BRANDED)

SPEC. DATE: 2026
REVISED: N/A
SCALE: N.T.S
DETAIL NO. S12

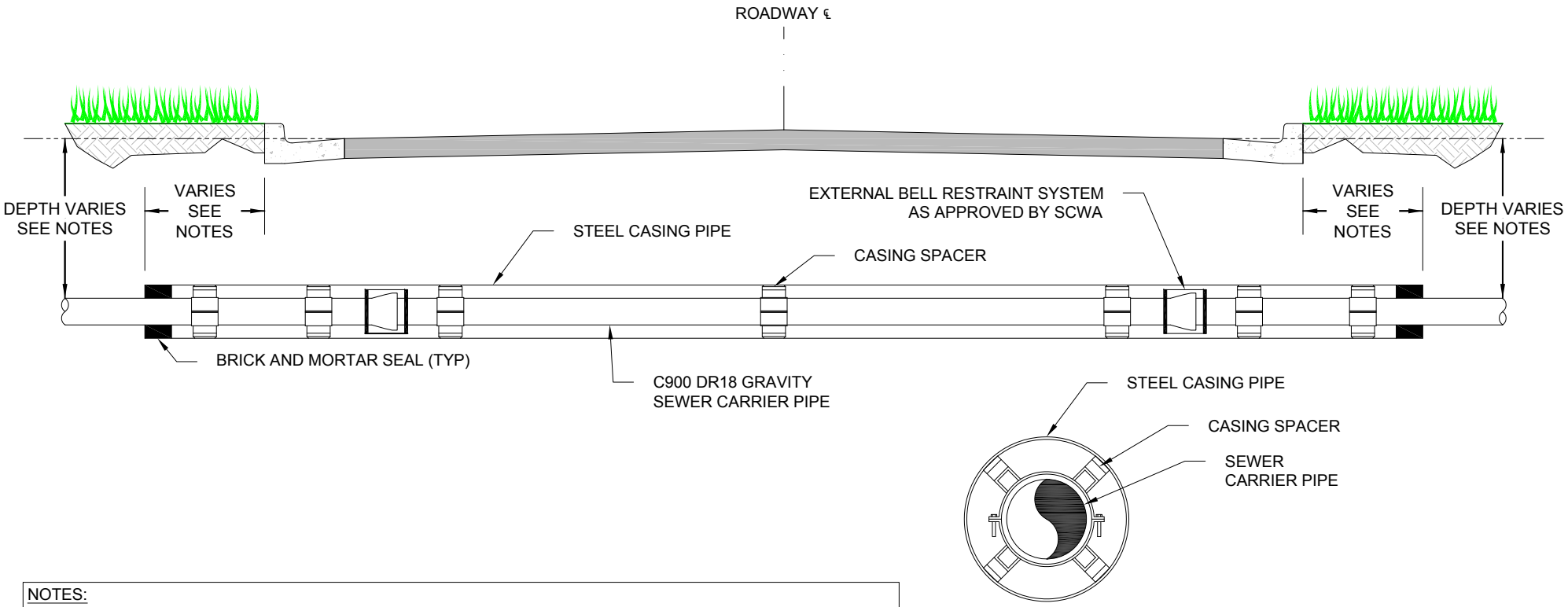

NOTES:

1. SEWER CARRIER PIPE SHALL BE PVC C900 DR18 AND SHALL BE RESTRAINED USING TWO INDEPENDENT METHODS: AN INTERNAL RIEBER GASKET RESTRAINT AND EXTERNAL APPROVED BELL RESTRAINT SYSTEM.
2. PROVIDE A MINIMUM OF 3 CASING SPACERS PER JOINT OF PIPE.
3. ENDS OF CASING PIPE SHALL BE SEALED WITH 8" BRICK AND CEMENT MORTAR.
4. ALL COUNTY ROAD CROSSINGS SHALL BE INSTALLED IN ACCORDANCE WITH SPALDING COUNTY DOT STANDARDS AND PERMIT REQUIREMENTS.
   - 4.1. CASING SHALL EXTEND MINIMUM OF 3 FEET BEYOND THE EDGE OF PAVEMENT, CURB, OR BEYOND THE TOE OF SLOPE OR DITCHLINE, WHICHEVER IS GREATER.
   - 4.2. CASING SHALL BE INSTALLED AT A DEPTH OF 4'-0" MINIMUM.
5. ALL STATE HIGHWAY CROSSINGS SHALL BE INSTALLED IN ACCORDANCE WITH GEORGIA DOT STANDARDS AND PERMIT REQUIREMENTS.
   - 5.1. CASING SHALL EXTEND MINIMUM OF 10 FEET BEYOND THE EDGE OF PAVEMENT, CURB, OR BEYOND THE TOE OF SLOPE OR DITCHLINE, WHICHEVER IS GREATER.
   - 5.2. CASING SHALL BE INSTALLED AT A DEPTH OF 10'-0" MINIMUM.
   - 5.3. FOR CONTROLLED-ACCESS HIGHWAY CROSSINGS, CASING MUST EXTEND FROM R/W TO R/W. BORE AND RECEIVING PITS ARE NOT ALLOWED WITHIN CONTROLLED-ACCESS LIMITS.
6. ALL RAILROAD CROSSINGS SHALL BE INSTALLED IN ACCORDANCE WITH AMERICAN RAILWAY ENGINEERING ASSOCIATION REGULATIONS AND IN ACCORDANCE WITH PERMIT REQUIREMENTS.

CARRIER PIPE NOMINAL DIAMETER (IN)	CASING PIPE NOMINAL DIAMETER (IN)	CASING PIPE THICKNESS (IN)
8	16	0.2500
10	18	0.2500
12	20	0.3130
16	26	0.3750
20	30	0.4380
24	36	0.5000
30	42	0.5000
36	48	0.6250
42	54	0.7500

SPALDING COUNTY WATER AUTHORITY

TYPICAL JACK AND BORE DETAIL GRAVITY SEWER

SPEC. DATE: 2026

REVISED: 11/2026

SCALE: N.T.S

DETAIL NO. S13

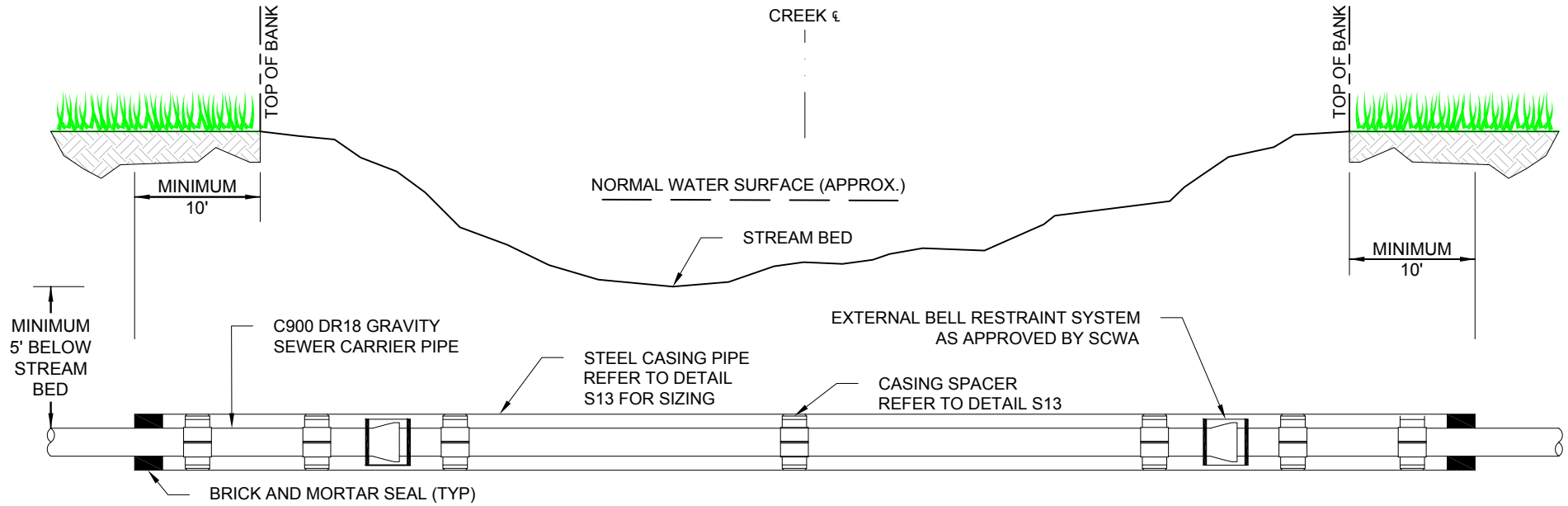

NOTES:

1. ALL CREEK, STREAM, AND PERENNIAL DRAINAGE CHANNEL CROSSINGS SHALL BE INSTALLED USING THE JACK AND BORE METHOD OR OTHER APPROVED TRENCHLESS INSTALLATION METHOD. OPEN-CUT INSTALLATION SHALL NOT BE PERMITTED UNLESS SPECIFICALLY APPROVED BY SCWA AND ALL APPLICABLE REGULATORY AGENCIES.
2. THE PROPOSED BORE ALIGNMENT SHALL EXTEND BEYOND THE TOP OF BANK ON BOTH SIDES OF THE CREEK. BORING AND RECEIVING PITS SHALL BE LOCATED OUTSIDE THE STREAM BANKS AND APPLICABLE STATE AND FEDERAL REGULATORY BUFFERS, UNLESS OTHERWISE AUTHORIZED BY THE APPROPRIATE REGULATORY AGENCIES.
3. THE TOP OF THE CASING PIPE SHALL BE INSTALLED A MINIMUM OF 5 FEET BELOW THE EXISTING STREAMBED ELEVATION. ADDITIONAL DEPTH SHALL BE PROVIDED WHERE NECESSARY TO ACCOUNT FOR ANTICIPATED STREAMBED SCOUR, CHANNEL MIGRATION, AND FUTURE CHANNEL EROSION. THE ENGINEER SHALL VERIFY THE REQUIRED INSTALLATION DEPTH BASED ON SITE-SPECIFIC CONDITIONS.
4. THE CONTRACTOR SHALL MAINTAIN THE EXISTING STREAMBED, STREAM BANKS, AND NATURAL DRAINAGE PATTERNS. NO DISTURBANCE OF THE STREAMBED OR BANKS SHALL BE PERMITTED EXCEPT AS AUTHORIZED BY APPLICABLE PERMITS.
5. THE CONTRACTOR SHALL TAKE ALL NECESSARY PRECAUTIONS TO PREVENT THE RELEASE OF DRILLING FLUIDS, GROUT, OR OTHER CONSTRUCTION MATERIALS INTO THE CREEK OR ADJACENT WETLANDS. AN INADVERTENT RETURN (FRAC-OUT) CONTINGENCY PLAN SHALL BE DEVELOPED AND IMPLEMENTED PRIOR TO COMMENCING BORING OPERATIONS.
6. THE CASING PIPE SHALL BE CONTINUOUS THROUGHOUT THE ENTIRE CREEK CROSSING AND SHALL EXTEND BEYOND THE TOP OF BANK ON BOTH SIDES. CASING ENDS SHALL BE SEALED TO PREVENT THE INFILTRATION OF GROUNDWATER, SOIL, AND OTHER FOREIGN MATERIALS.
   THE CARRIER PIPE SHALL BE SUPPORTED AND CENTERED WITHIN THE CASING USING APPROVED CASING SPACERS. CASING SPACERS SHALL BE INSTALLED IN ACCORDANCE WITH THE MANUFACTURER'S RECOMMENDATIONS.
7. THE CONTRACTOR SHALL PROVIDE ADEQUATE EROSION AND SEDIMENT CONTROL MEASURES AT ALL BORING AND RECEIVING PIT LOCATIONS. DISTURBED AREAS SHALL BE RESTORED TO THEIR ORIGINAL OR BETTER CONDITION UPON COMPLETION OF THE WORK.
8. ALL APPLICABLE STATE AND FEDERAL PERMITS, INCLUDING STREAM BUFFER VARIANCES AND U.S. ARMY CORPS OF ENGINEERS AUTHORIZATIONS, SHALL BE OBTAINED PRIOR TO CONSTRUCTION. THE CONTRACTOR SHALL COMPLY WITH ALL PERMIT CONDITIONS.
9. THE CONTRACTOR SHALL NOTIFY SCWA IMMEDIATELY OF ANY DAMAGE TO THE CASING, CARRIER PIPE, STREAM BANKS, OR OTHER EXISTING INFRASTRUCTURE DURING INSTALLATION.
10. THE STEEL CASING PIPE SHALL EXTEND A MINIMUM OF 10 FEET BEYOND THE TOP OF BANK ON BOTH SIDES OF THE CREEK, MEASURED HORIZONTALLY. THE CASING SHALL EXTEND FARTHER WHERE NECESSARY TO AVOID AREAS SUBJECT TO BANK EROSION, CHANNEL MIGRATION, OR FUTURE SCOUR, AS DETERMINED BY THE DESIGN ENGINEER.

spalding county SCWA water authority

SPALDING COUNTY WATER AUTHORITY

TYPICAL CREEK CROSSING DETAIL

SPEC. DATE: 2026

REVISED: 11/2026

SCALE: N.T.S

DETAIL NO.
S13.1

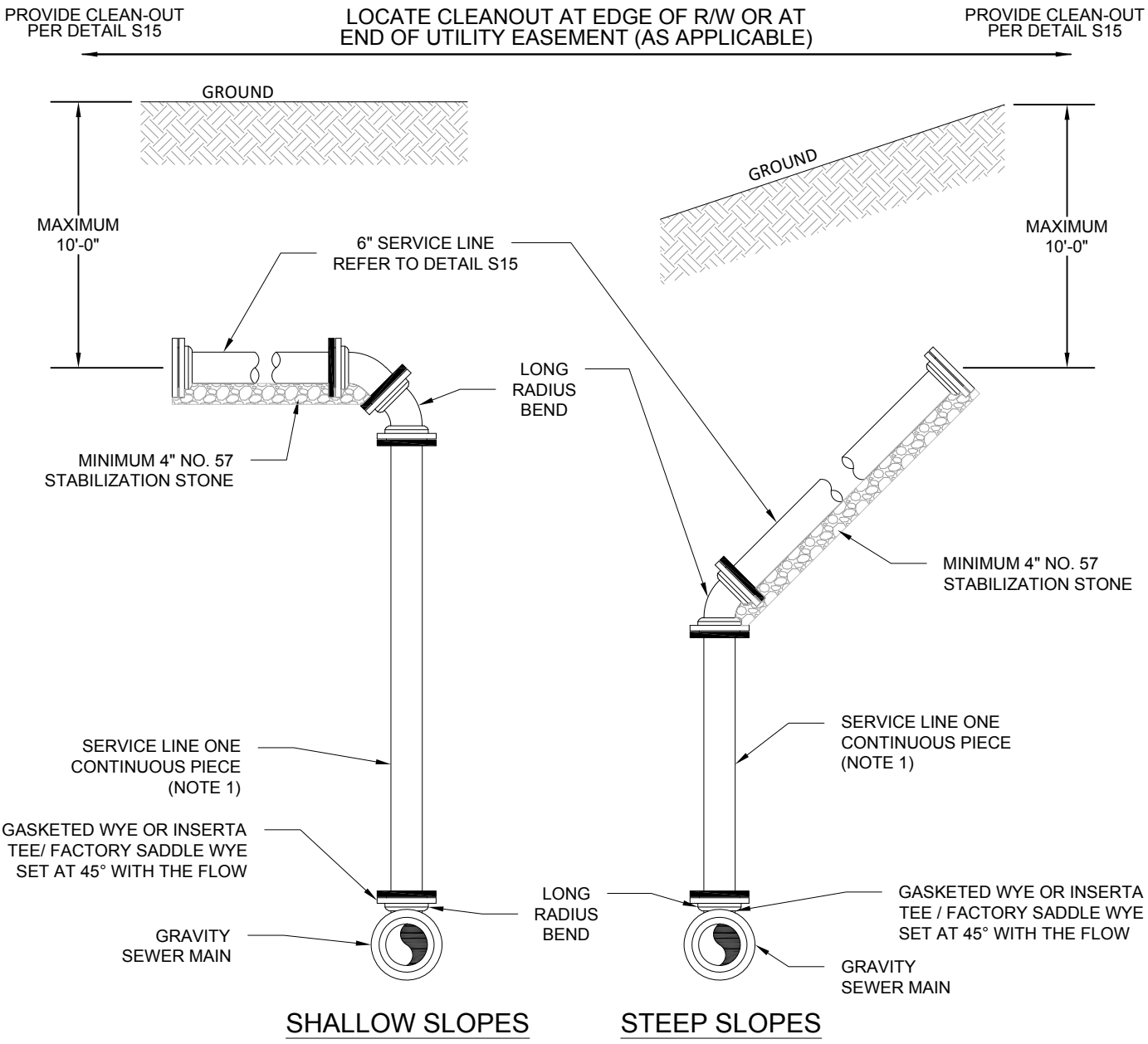

NOTES:

1. ACCEPTABLE USE OF SERVICE LINE MATERIAL WITH RESPECT TO DEPTH OF PIPE BURIAL SHALL BE VERIFIED BY THE DEVELOPER'S DESIGN PROFESSIONAL.
2. SERVICE LINES SHALL BE STUBBED OUT TO R/W OR BACK OF UTILITY EASEMENT (AS APPLICABLE) AND SHALL BE NO MORE THAN 10 FEET DEEP.
3. FITTINGS SHALL BE RESTRAINED.
4. SERVICE LINE SHALL BE PLUGGED WITH A WATERTIGHT CAP.

SPALDING COUNTY WATER AUTHORITY

SERVICE LATERAL FOR SEWER LINES OVER 16 FEET DEEP

SPEC. DATE: 2026

REVISED: N/A

SCALE: N.T.S

DETAIL NO. S14

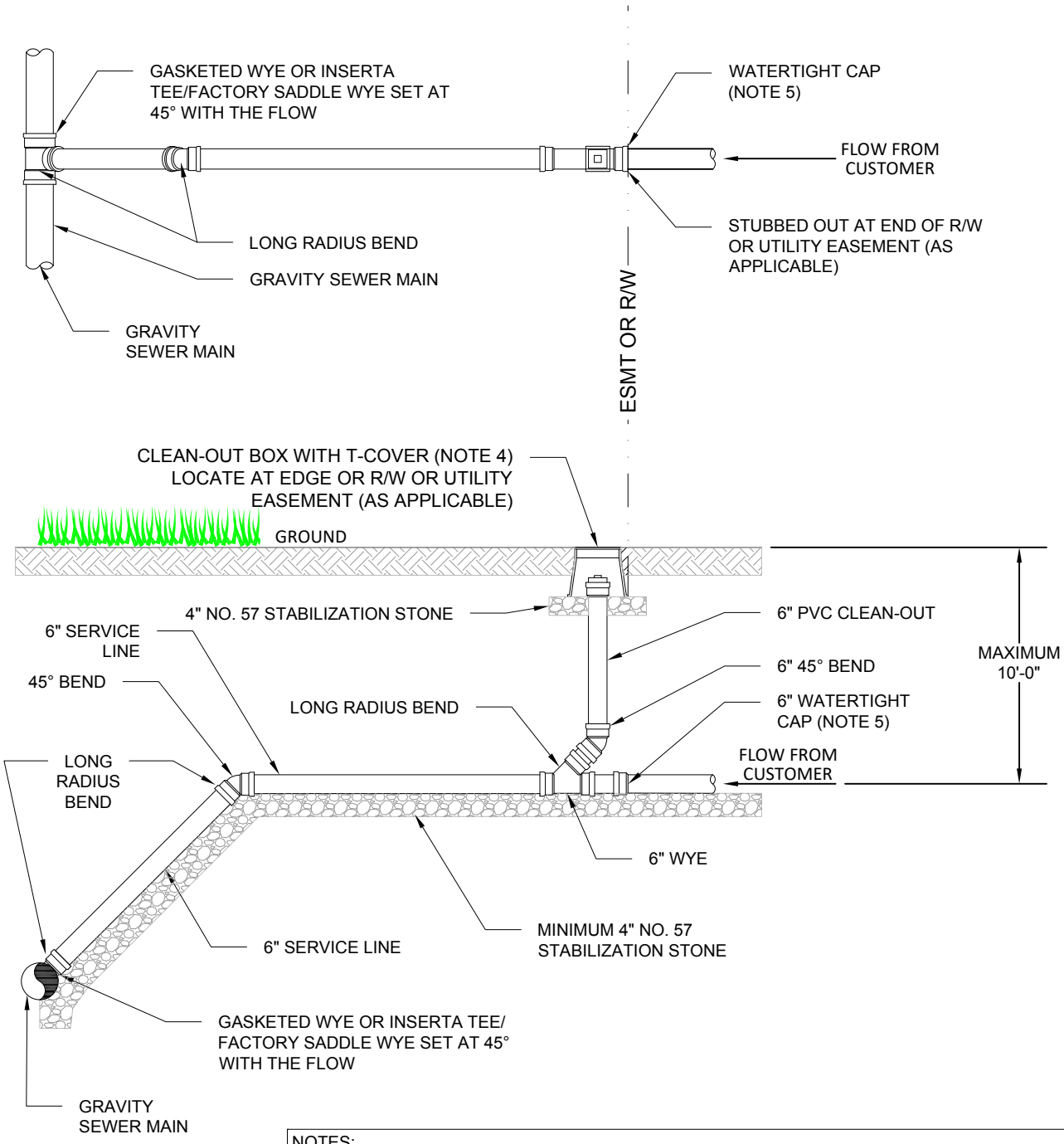

NOTES:

1. A SEWER TAP INSPECTION IS REQUIRED BY SCWA.
2. SERVICE LINES HAVING LESS THAN 5 FEET OF COVER MATERIAL SHALL BE SPECIFIED BY SCWA.
3. SERVICE LINES SHALL BE STUBBED OUT TO R/W OR BACK OF UTILITY EASEMENT (AS APPLICABLE) AND SHALL BE NO MORE THAN 10 FEET DEEP.
4. CLEAN-OUT COVER SHALL HAVE "SCWA SEWER" EMBOSSED ON LID AND BE FLUSH WITH FINISHED GRADE.
5. A WATER TIGHT CAP SHALL BE INSTALLED ON THE END OF THE LINE.
6. PLUMBING CONTRACTOR SHALL TIE ON TO SERVICE LINE USING STANDARD PVC FITTINGS OR FERNCO FITTING.

SPALDING COUNTY WATER AUTHORITY

SANITARY SEWER SERVICE LINE CLEAN-OUT CONNECTION

SPEC. DATE: 2026

REVISED: N/A

SCALE: N.T.S

DETAIL NO. S15

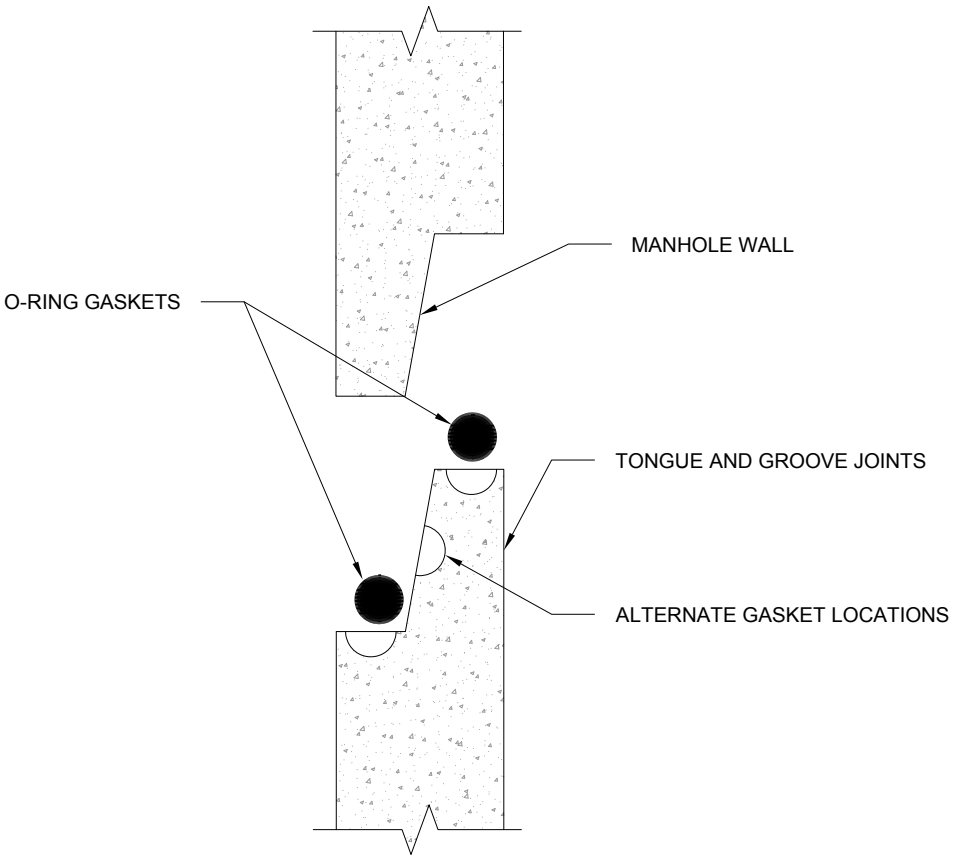

NOTES:

1. AFTER INSTALLATION JOINTS SHALL BE GROUTED SMOOTH WITH CEMENT GROUT ON INSIDE AND OUT.

2. AN EXTERNAL WRAP SUCH AS INFI-SHIELD GATOR WRAP OR EQUAL SHALL SEAL EACH OUTSIDE JOINT.

SPALDING COUNTY WATER AUTHORITY

MANHOLE JOINT DETAIL WITH JOINT WRAP

SPEC. DATE: 2026

REVISED: N/A

SCALE: N.T.S

DETAIL NO.
S16

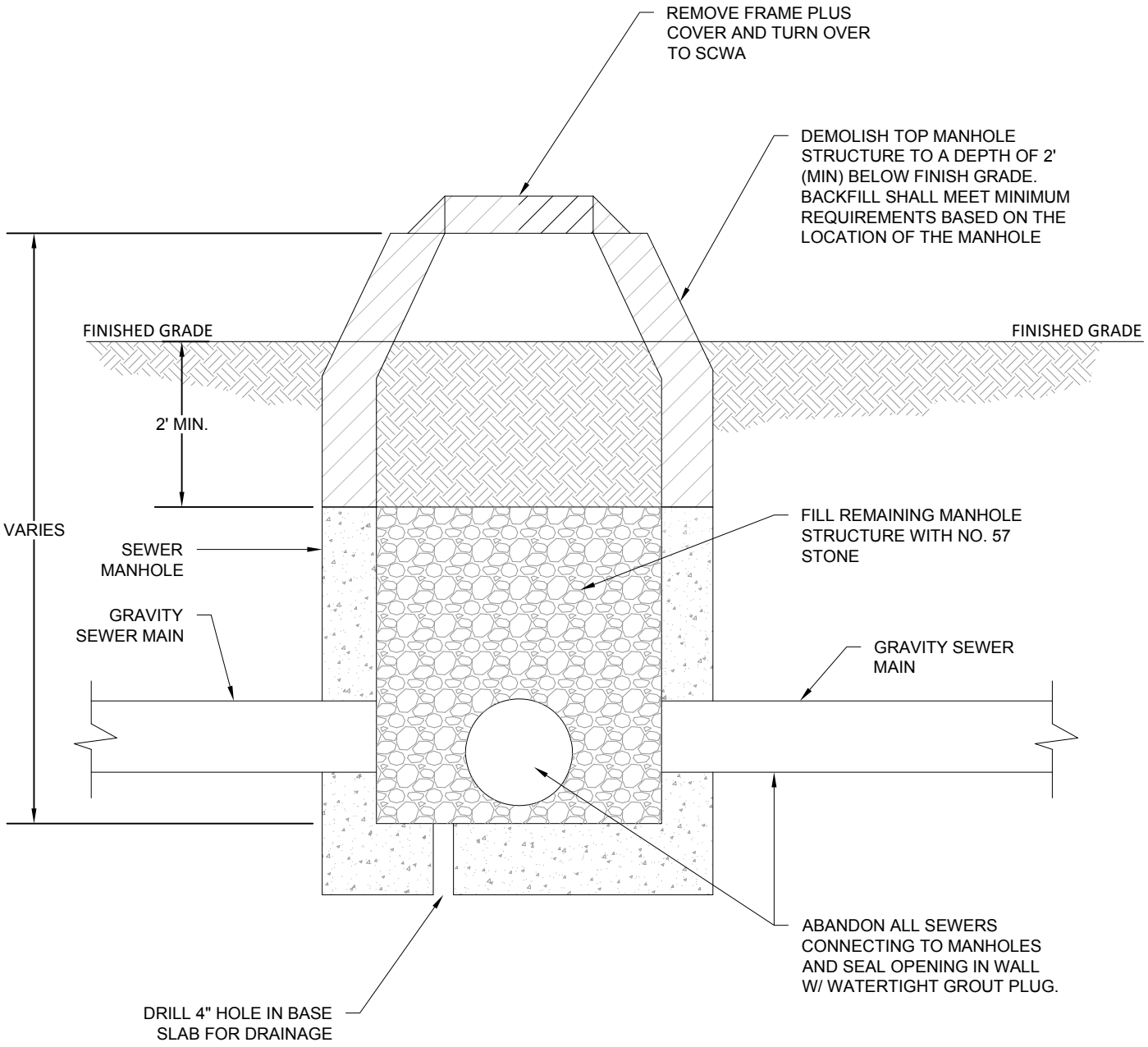

NOTES:

1. EXISTING GRAVITY SEWER MAINS DESIGNATED FOR ABANDONMENT SHALL BE VERIFIED TO BE OUT OF SERVICE PRIOR TO COMMENCING ABANDONMENT ACTIVITIES.
2. ALL ACTIVE SERVICE CONNECTIONS SHALL BE DISCONNECTED AND RECONNECTED TO THE PROPOSED SEWER SYSTEM PRIOR TO ABANDONMENT.
3. EXISTING SEWER MAINS APPROVED FOR ABANDONMENT IN PLACE SHALL BE CLEANED AND SEALED AT ALL OPEN ENDS AND CONNECTION POINTS. ABANDONED SEWER MAINS SHALL BE FILLED WITH APPROVED FLOWABLE GROUT WHERE INDICATED ON THE PLANS OR REQUIRED BY SCWA.
4. ABANDONED SEWER MAINS LOCATED BENEATH PROPOSED ROADWAYS, BUILDINGS, OR OTHER STRUCTURES SHALL BE GROUT-FILLED OR REMOVED AS DIRECTED BY SCWA.
5. EXISTING MANHOLES ASSOCIATED WITH ABANDONED SEWER MAINS SHALL BE REMOVED OR ABANDONED IN ACCORDANCE WITH SCWA REQUIREMENTS.
6. THE CONTRACTOR SHALL COORDINATE ALL ABANDONMENT ACTIVITIES WITH SCWA AND SHALL NOT ABANDON ANY EXISTING SEWER MAIN UNTIL ALL REQUIRED CONNECTIONS AND SERVICE TRANSFERS HAVE BEEN COMPLETED.

spalding county SCWA water authority

SPALDING COUNTY WATER AUTHORITY

METHOD OF SANITARY SEWER MANHOLE ABANDONMENT

SPEC. DATE: 2026

REVISED: N/A

SCALE: N.T.S

DETAIL NO.
S17

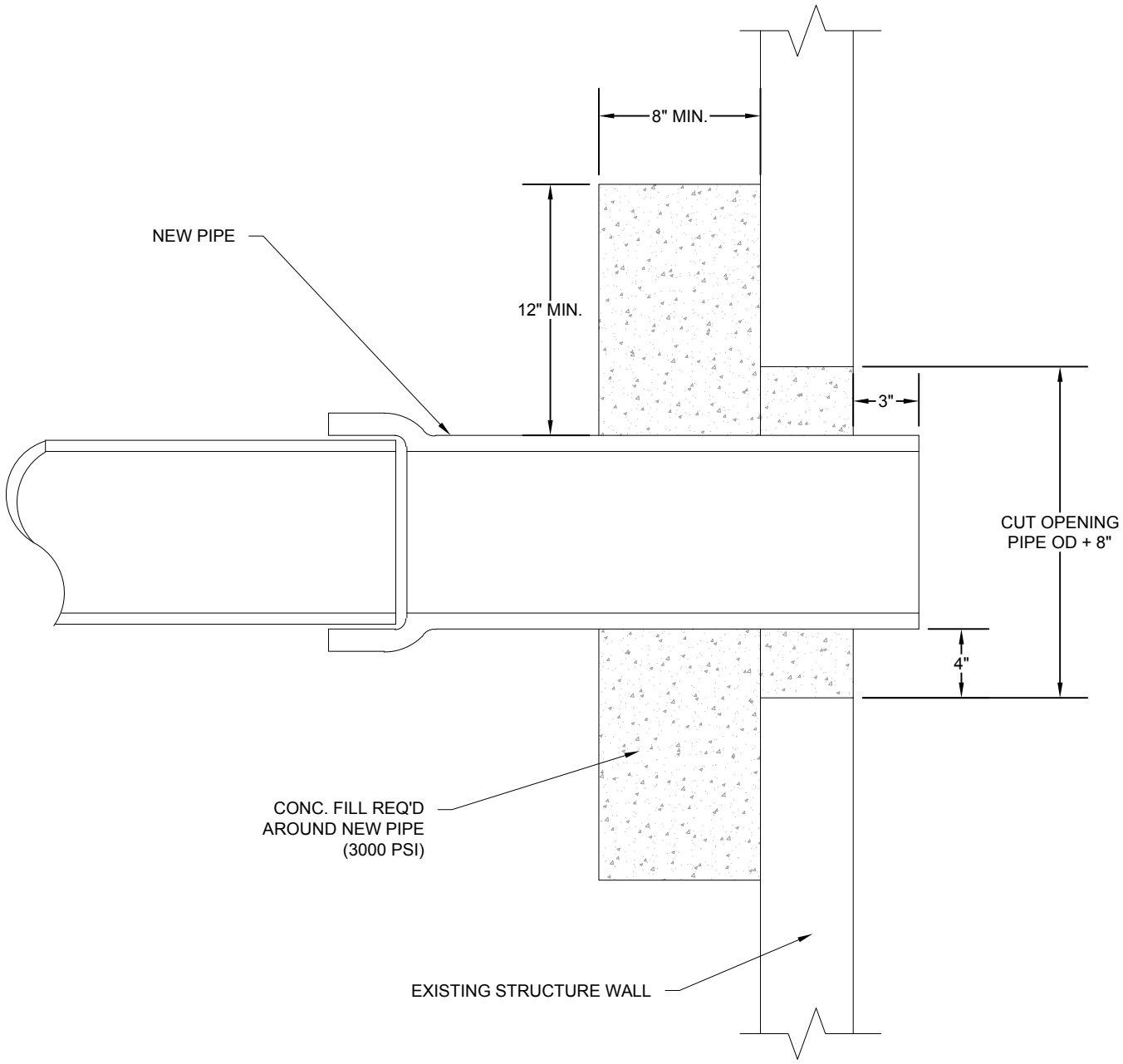

NOTES:

1. CORE-DRILL EXISTING MANHOLE WALL TO ACCOMMODATE PROPOSED SEWER PIPE. PROVIDE A FLEXIBLE, WATERTIGHT PIPE-TO-MANHOLE CONNECTOR CONFORMING TO ASTM C923 OR APPROVED EQUIVALENT.
2. INSTALL PIPE CONNECTOR IN ACCORDANCE WITH THE MANUFACTURER'S WRITTEN INSTRUCTIONS. GROUT ALONE SHALL NOT BE ACCEPTABLE AS THE PRIMARY MEANS OF SEALING THE PIPE PENETRATION.
3. REPAIR EXISTING MANHOLE WALL AND BENCHING AS NECESSARY TO PROVIDE A SMOOTH, CONTINUOUS FLOW CHANNEL. REMOVE ALL DRILLING DEBRIS AND CONSTRUCTION MATERIALS FROM THE MANHOLE.
4. CONTRACTOR SHALL DEMONSTRATE THE WATERTIGHTNESS OF THE NEW PIPE CONNECTION BY AN APPROVED TEST METHOD. TESTING SHALL BE PERFORMED IN ACCORDANCE WITH SCWA REQUIREMENTS AND APPROVED BY SCWA PRIOR TO ACCEPTANCE.

spalding county SCWA water authority

SPALDING COUNTY WATER AUTHORITY

NEW LINE CONNECTION TO AN EXISTING STRUCTURE

SPEC. DATE: 2026

REVISED: N/A

SCALE: N.T.S

DETAIL NO.
S18

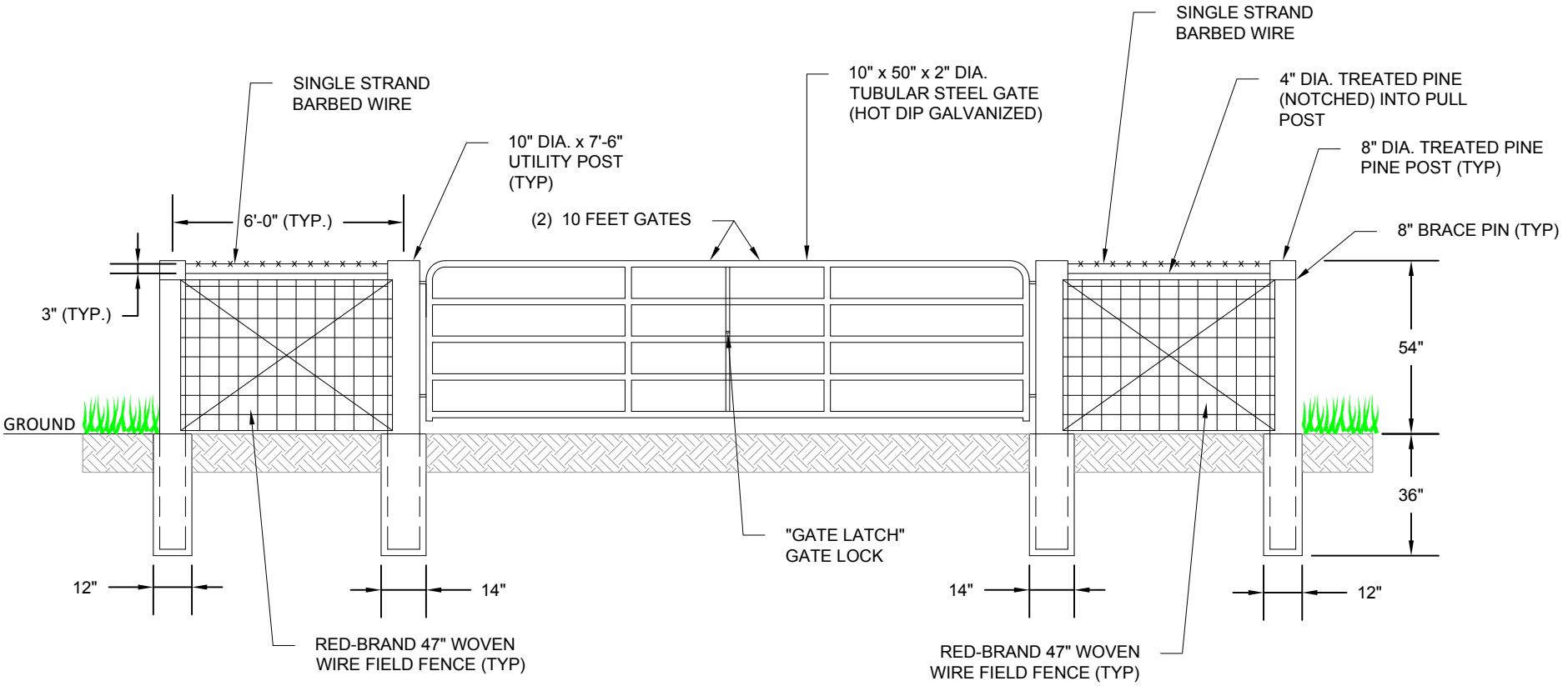

NOTES:

1. FENCE POSTS SHALL BE EMBEDDED IN CLASS "B" CONCRETE.
2. WOVEN WIRE FIELD FENCE SHALL BE ATTACHED TO FENCE POSTS WITH 1 ¼" GALVANIZED STAPLES.
3. ENSURE SCWA LOCK LOCATION DOES NOT GET LOCKED OUT BY OTHER LOCKS (I.E., PROPERTY OWNERS LOCK, ETC).

spalding county SCWA water authority

SPALDING COUNTY WATER AUTHORITY

SEWER EASEMENT ACCESS GATE

SPEC. DATE: 2026

REVISED: N/A

SCALE: N.T.S

DETAIL NO.
S23

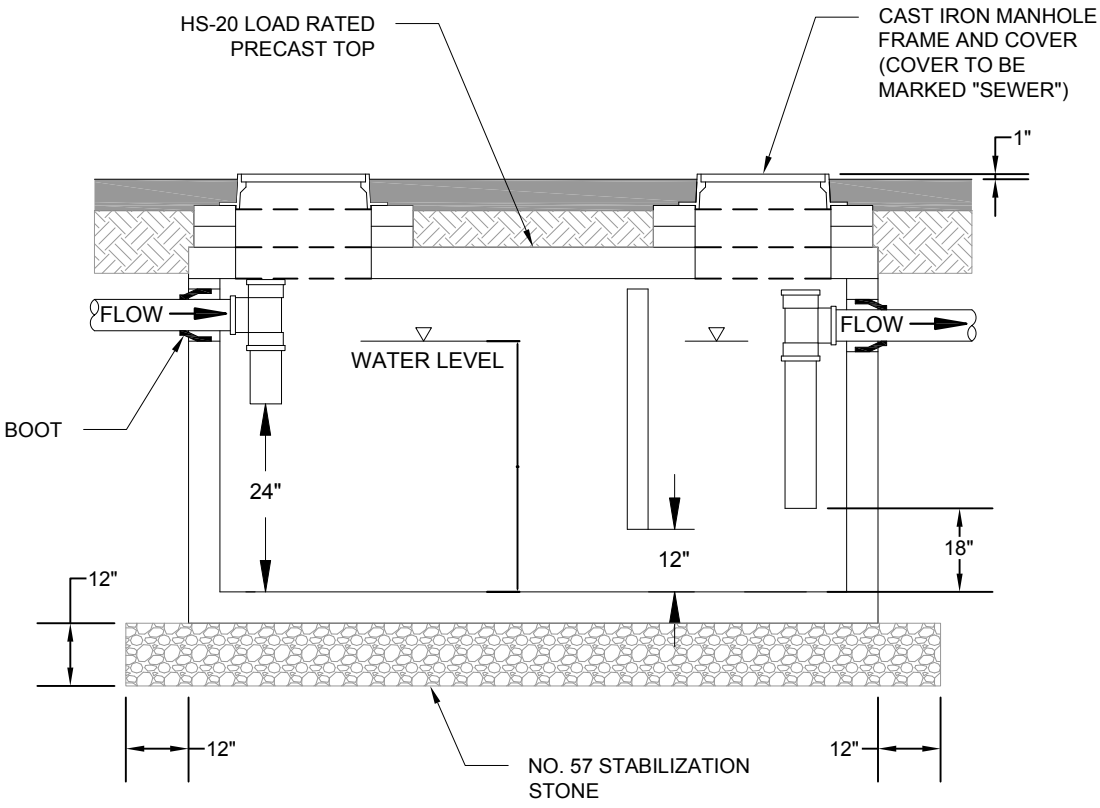

NOTES:

1. GREASE INTERCEPTOR SHALL HAVE A MINIMUM CAPACITY OF 1,500 GALLONS AND A MAXIMUM CAPACITY OF 3,000 GALLONS. IF REQUIRED CAPACITY IS GREATER THAN 3,000 GALLONS, MULTIPLE GREASE INTERCEPTORS SHALL BE USED.
2. CONCRETE DESIGN STRENGTH SHALL BE 4,000 PSI @ 28 DAYS.
3. GREASE INTERCEPTOR SHALL BE HS-20 LOAD RATED.

SPALDING COUNTY WATER AUTHORITY

GREASE INTERCEPTOR

SPEC. DATE: 2026

REVISED: N/A

SCALE: N.T.S

DETAIL NO.
S21

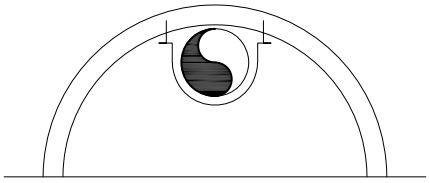

CLAMP DETAIL

A	SECTION
-	SCALE: NONE

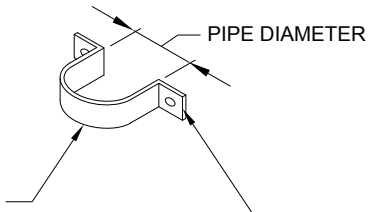

STRAP DETAIL

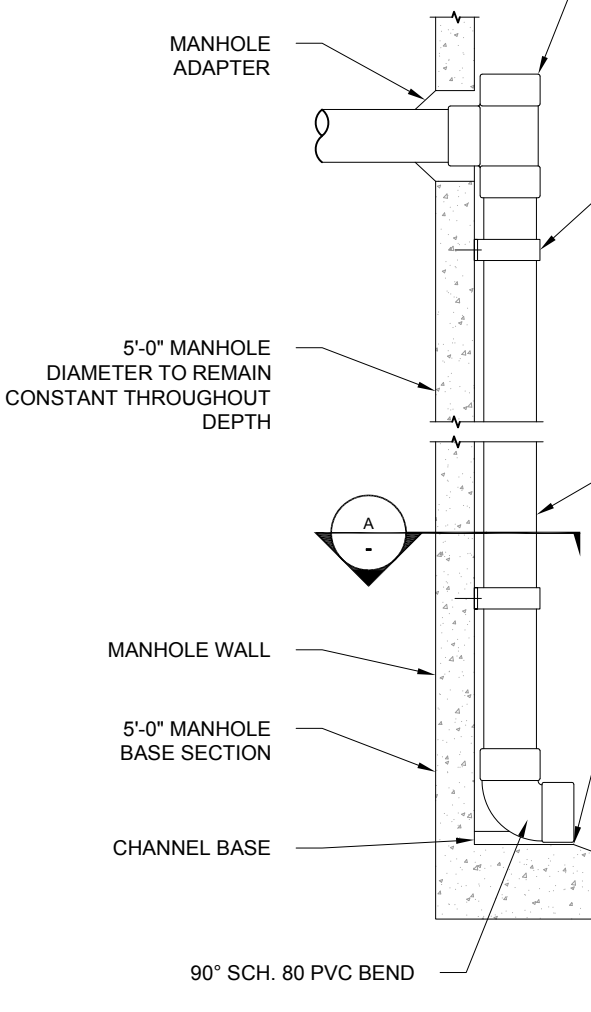

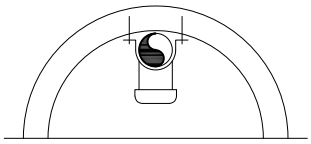

CLAMP DETAIL

A	SECTION
-	SCALE: NONE

NOTE:

1. DROP CONNECTIONS SHALL BE PROVIDED WHERE SEWER ENTERS A MANHOLE AT AN ELEVATION 24 INCHES OR MORE ABOVE THE DOWNSTREAM DISCHARGE SEWER INVERT.
2. MINIMUM MANHOLE DIAMETER SHALL BE 5'-0" FOR A MANHOLE WITH A PIPED INSIDE DROP CONNECTION.
3. MANHOLE DIAMETER SHALL REMAIN CONSTANT THROUGHOUT ITS DEPTH AND SHALL NOT BE REDUCED ABOVE OR BELOW THE SPECIFIED MINIMUM DIAMETER.

SPALDING COUNTY WATER AUTHORITY

PIPED INSIDE DROP CONNECTION FOR SEWER MANHOLE

SPEC. DATE: 2026

REVISED: 11/2026

SCALE: N.T.S

DETAIL NO. S24

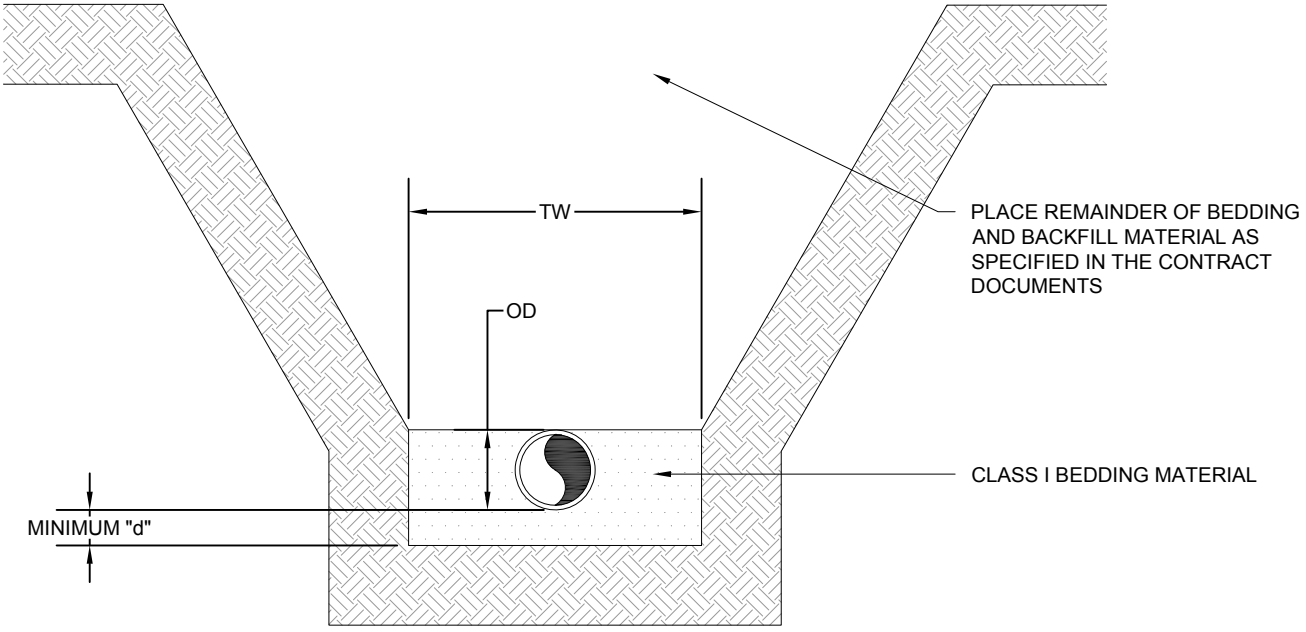

KEY:

OD = OUTSIDE DIAMETER OF PIPE

TW = TRENCH WIDTH AT TOP OF PIPE:
MIN. = OD + 18 INCHES OR 1.25xOD+12 INCHES (WHICHEVER IS GREATER)

d = DEPTH OF BEDDING MATERIAL BELOW PIPE:
MIN. = OD/8 OR 4 INCHES (WHICHEVER IS GREATER)

NOTES:

1. PVC GRAVITY SEWER PIPE SHALL CONFORM TO AWWA C900, DR18, FOR INSTALLATIONS WHERE DEPTH OF COVER EXCEEDS 20 FEET AND DOES NOT EXCEED 40 FEET. PIPE MATERIAL SHALL REMAIN CONSISTENT THROUGHOUT THE ENTIRE MANHOLE-TO-MANHOLE RUN. TRANSITIONS BETWEEN PIPE MATERIALS OR DIMENSION RATIOS WITHIN A RUN SHALL NOT BE PERMITTED.
2. CLASS I EMBEDMENT MATERIAL SHALL CONSIST OF CLEAN, ANGULAR NO. 57 STONE. INSTALL AND CONSOLIDATE IN ACCORDANCE WITH ASTM D2321 AND THE PIPE MANUFACTURER'S RECOMMENDATIONS.
3. PROVIDE A MINIMUM OF 4 INCHES OF BEDDING BELOW THE PIPE. CLASS I EMBEDMENT SHALL EXTEND A MINIMUM OF 6 INCHES ABOVE THE PIPE CROWN. PROVIDE PROPER HAUNCH SUPPORT AND CONSOLIDATION.
4. TRENCH WIDTH SHALL CONFORM TO THE MINIMUM DIMENSIONS SHOWN. ALTERNATIVE EMBEDMENT MATERIALS SHALL REQUIRE PRIOR APPROVAL BY SCWA.
5. MAXIMUM DEPTH OF COVER SHALL BE 40 FEET. INSTALLATIONS EXCEEDING 40 FEET SHALL REQUIRE SITE-SPECIFIC STRUCTURAL DESIGN AND PRIOR APPROVAL BY SCWA.
6. THIS DETAIL IS NOT INTENDED FOR INSTALLATIONS SUBJECT TO HIGHWAY OR ROADWAY LIVE LOADS. ROADWAY INSTALLATIONS SHALL BE DESIGNED FOR APPLICABLE LIVE LOADS AND SHALL BE SUBJECT TO SCWA APPROVAL.

spalding county SCWA water authority

SPALDING COUNTY WATER AUTHORITY

PVC C900 GRAVITY SEWER DEEP BURIAL

SPEC. DATE: 2026

REVISED: 11/2026

SCALE: N.T.S

DETAIL NO.
S25