DESIGN CALCULATIONS

NOTES:

A PRECONSTRUCTION CONFERENCE MUST BE HELD WITH THE SPALDING COUNTY WATER AUTHORITY AND THE CONTRACTOR OF RECORD BEFORE ANY WORK MAY BEGIN.

DESIGN CRITERIA:

SEE TABLE A.1 - SPALDING COUNTY GRAVITY SEWER DESIGN FLOW CALCULATION GUIDELINES

PEAK FACTOR = 2.5

DESIGN FLOWS _____ AVERAGE _____ PEAK

STATIC HEAD _____ FT

PUMP DESIGN TDH _____ GPM @ _____ FT

FORCE MAIN DIAMETER _____

FORCE MAIN VELOCITY _____ (2 F.P.S. MIN.)

HIGH ALARM ELEVATION _____

LOWEST OVERFLOW ELEVATION _____

STORAGE VOLUME _____

STORAGE TIME AT DESIGN FLOW _____

PUMPS:

MANUFACTURER _____

MODEL _____

_____ DIA. IMPELLER

_____ DIA. SUCTION

_____ DIA. DISCHARGE

_____ H.P.

_____ V, _____ Ø, _____ WIRE, _____ CYCLE

WETWELL VOLUME: _____ GAL.

PUMP CYCLE TIME: _____ AT MINIMUM ADF

_____ AT MINIMUM PEAK FLOW

GENERATOR:

MANUFACTURER _____

MODEL _____

RATING _____ KW _____ V _____ FUEL

spalding county SCWA water authority	SPALDING COUNTY WATER AUTHORITY	SPEC. DATE: 2024
		REVISED: N/A
	PUMP STATION DATA	SCALE: N.T.S.
		DETAIL NO. PS01

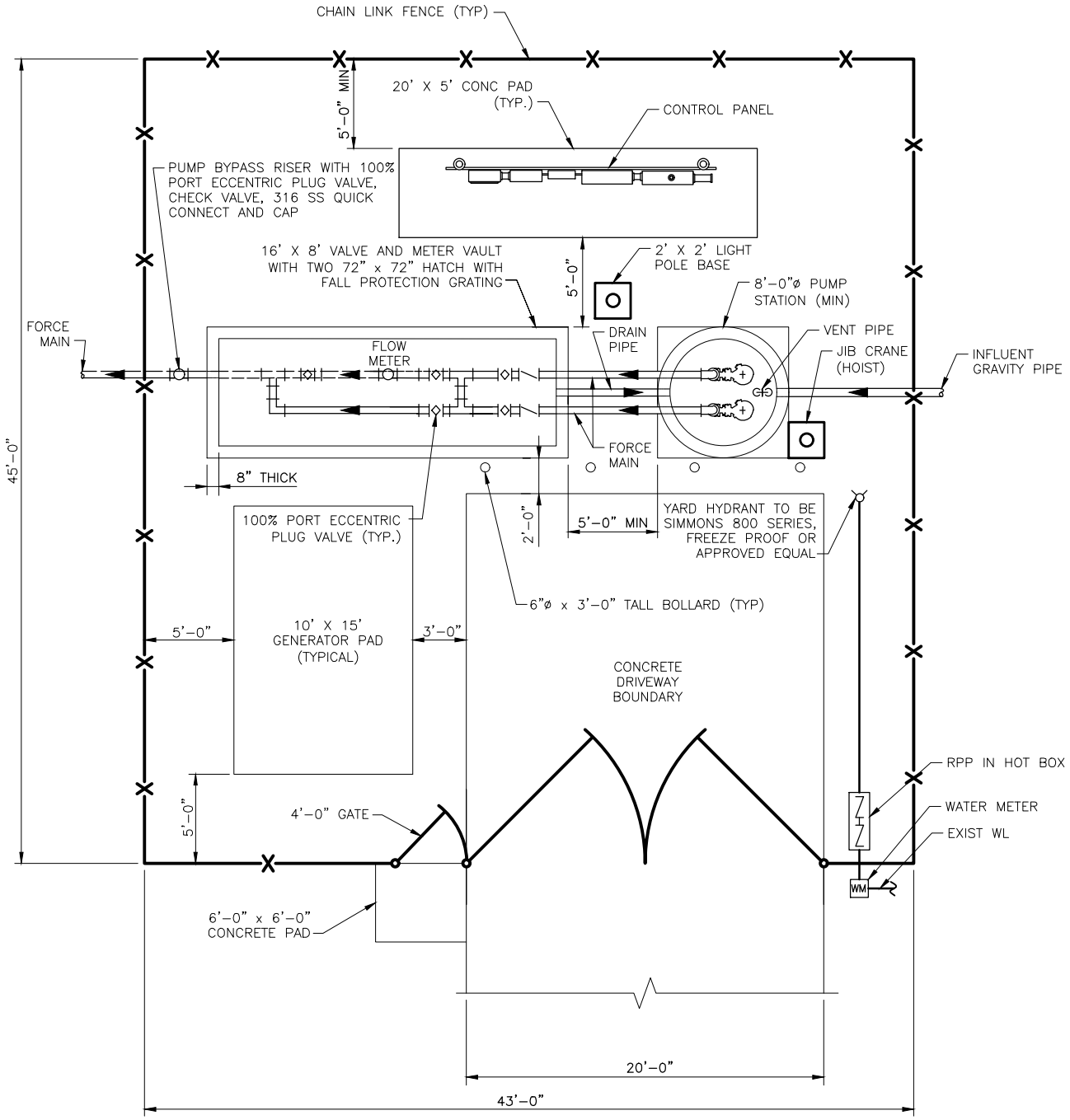

NOTES:

1. DETAIL IS EXAMPLE SITE PLAN. SIZES ARE RELATIVE AND BASED ON MINIMUM CRITERIA. LARGER WETWELLS, VALVE VAULTS, ETC, MAY BE REQUIRED BASED ON SITE SPECIFIC CONDITIONS.
2. PUMP STATION PAD AND DRIVEWAY SHALL INCLUDE EXPANSION JOINTS AS NEEDED.
3. PUMP STATION PAD< OVERFLOW VAULT TOP SLAB, AND DRIVEWAY REINFORCEMENT SHALL BE DESIGNED TO WITHSTAND 100,000 LB LOAD.
4. ELECTRICAL AND CONTROL PANELS SHALL BE PROVIDED WITH A 4 FT WIDE, 8 FT HIGH CANOPY. LENGTH OF CANOPY IS DETERMINED BY THE TOTAL COMBINED LENGTH OF ELECTRICAL AND CONTROL PANELS.

spalding county SCWA water authority	SPALDING COUNTY WATER AUTHORITY	SPEC. DATE: 2024
		REVISED: N/A
	PUMP STATION SITE PLAN	SCALE: N.T.S.
		DETAIL NO. PS02

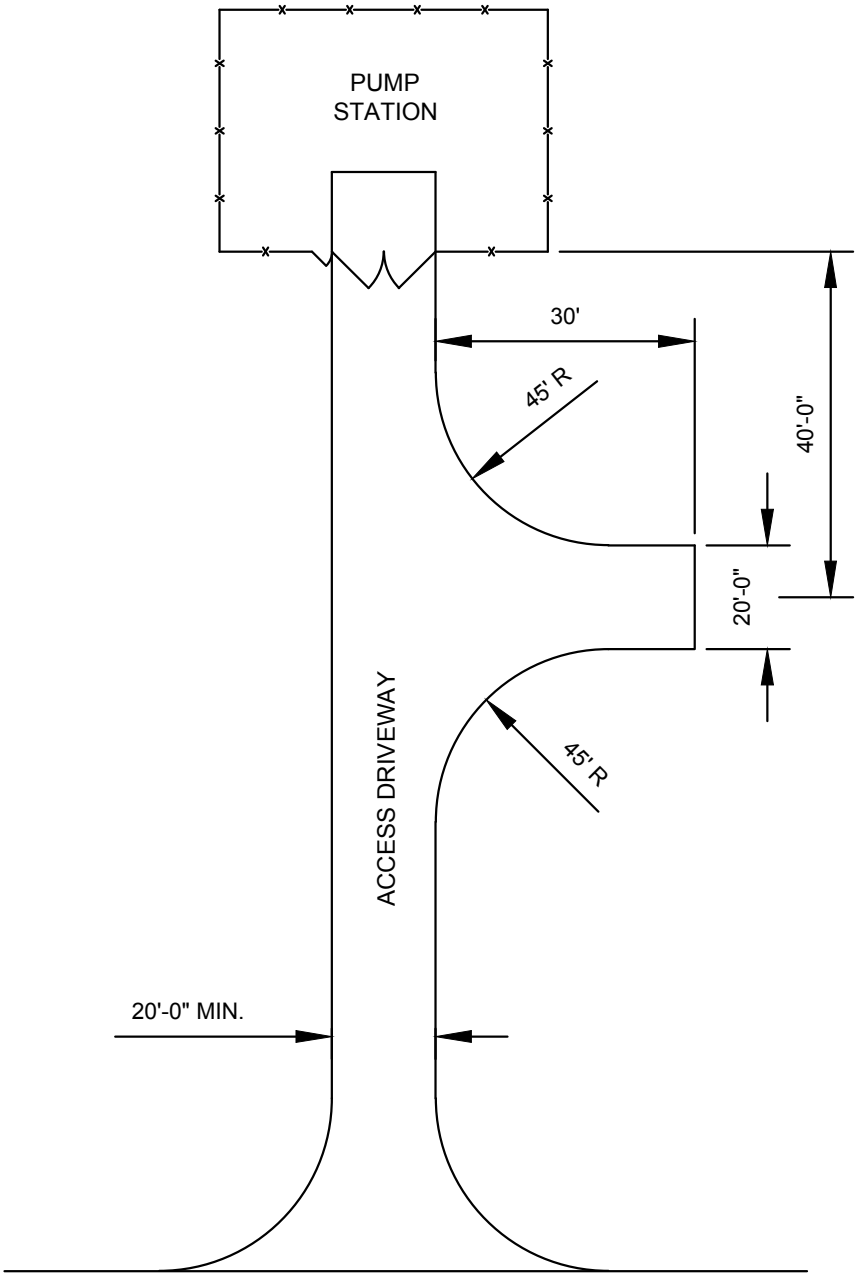

NOTES:

1. ENSURE THAT HAZMAT TRUCK MAY ENTER, BACK OUT, TURN AROUND AND EXIT PUMP STATION IN SAFE MANNER.

2. ACCESS DRIVEWAY SHALL INCLUDE EXPANSION JOINTS AS NEEDED.

3. ACCESS DRIVEWAY REINFORCEMENT SHALL BE DESIGNED TO WITHSTAND 100,000 LB LOAD.

spalding county SCWA water authority	SPALDING COUNTY WATER AUTHORITY	SPEC. DATE: 2024
	EXAMPLE ACCESS DRIVEWAY AND TURNAROUND AREA	REVISED: N/A
		SCALE: N.T.S.
		DETAIL NO. PS03

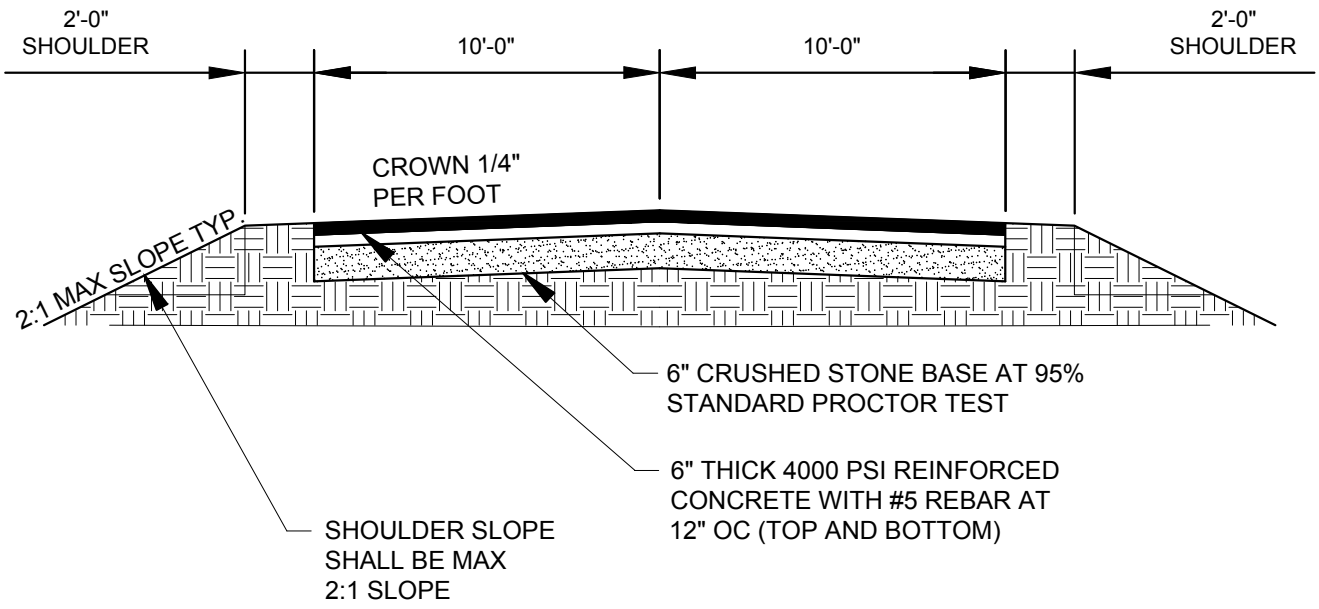

NOTES:

1. CONTRACTOR SHALL SUBMIT COPY OF PLAN AND PROFILES OF ACCESS ROAD FROM PUMP STATION SITE TO EXISTING ROAD OR STREET. SLOPE OF ACCESS ROAD SHALL COMPLY WITH SPALDING COUNTY REGULATIONS.
2. ACCESS DRIVEWAY SHALL INCLUDE EXPANSION JOINTS AS NEEDED.
3. ACCESS DRIVEWAY REINFORCEMENT SHALL BE DESIGNED TO WITHSTAND 80,000 LB LOAD

spalding county SCWA water authority	SPALDING COUNTY WATER AUTHORITY	SPEC. DATE: 2024
	PUMP STATION TYPICAL DRIVE CROSS SECTION	REVISED: N/A
		SCALE: N.T.S.
		DETAIL NO. PS04

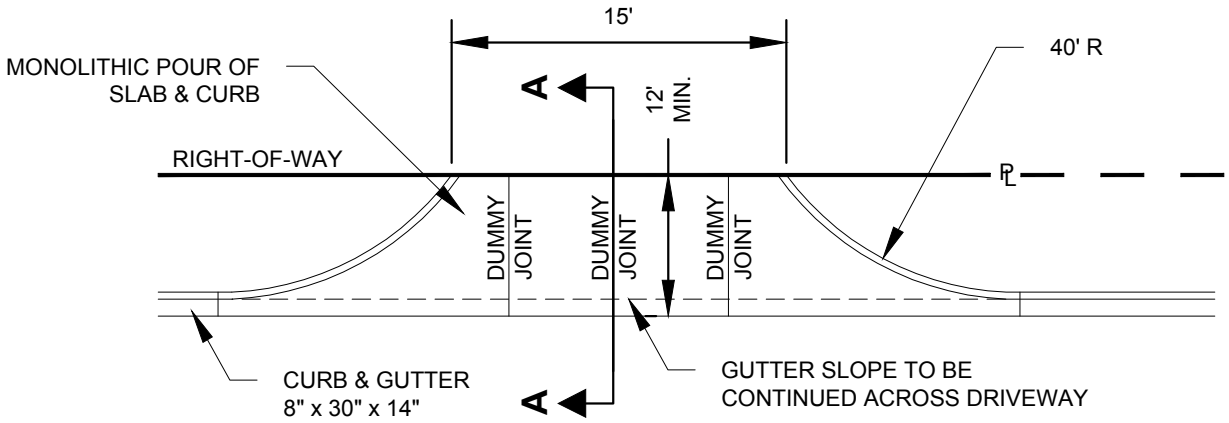

PLAN

ORIGINAL CURB AND GUTTER TO BE REMOVED.
ASPHALT TO BE PATCHED AS REQUIRED.

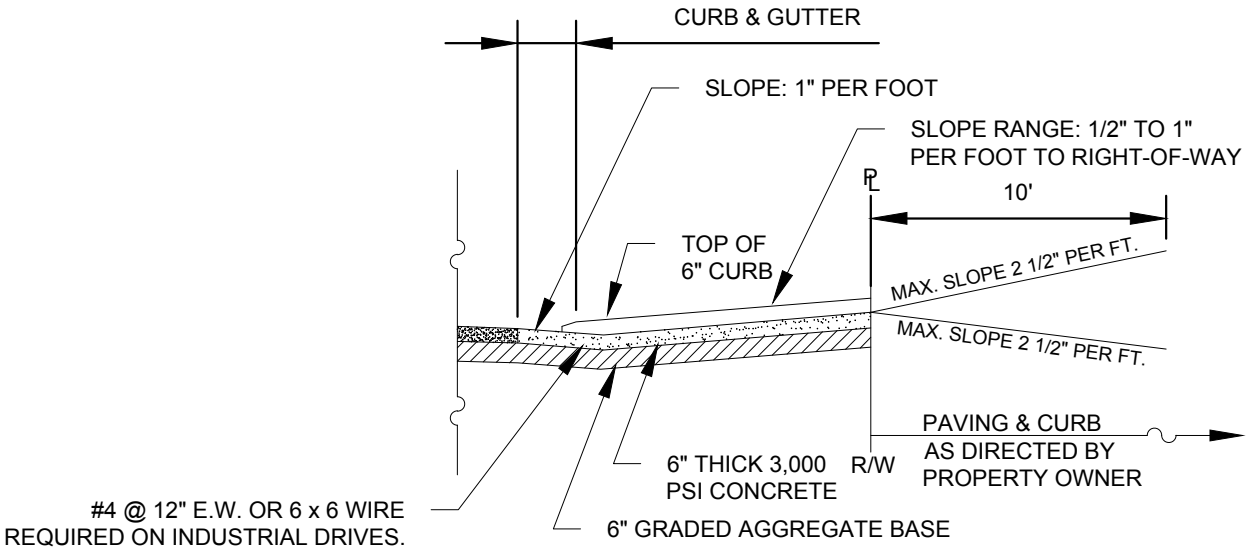

SECTION A-A

spalding county SCWA water authority	SPALDING COUNTY WATER AUTHORITY	SPEC. DATE: 2024
	ACCESS ROAD ENTRANCE	REVISED: N/A
		SCALE: N.T.S.
		DETAIL NO. PS05

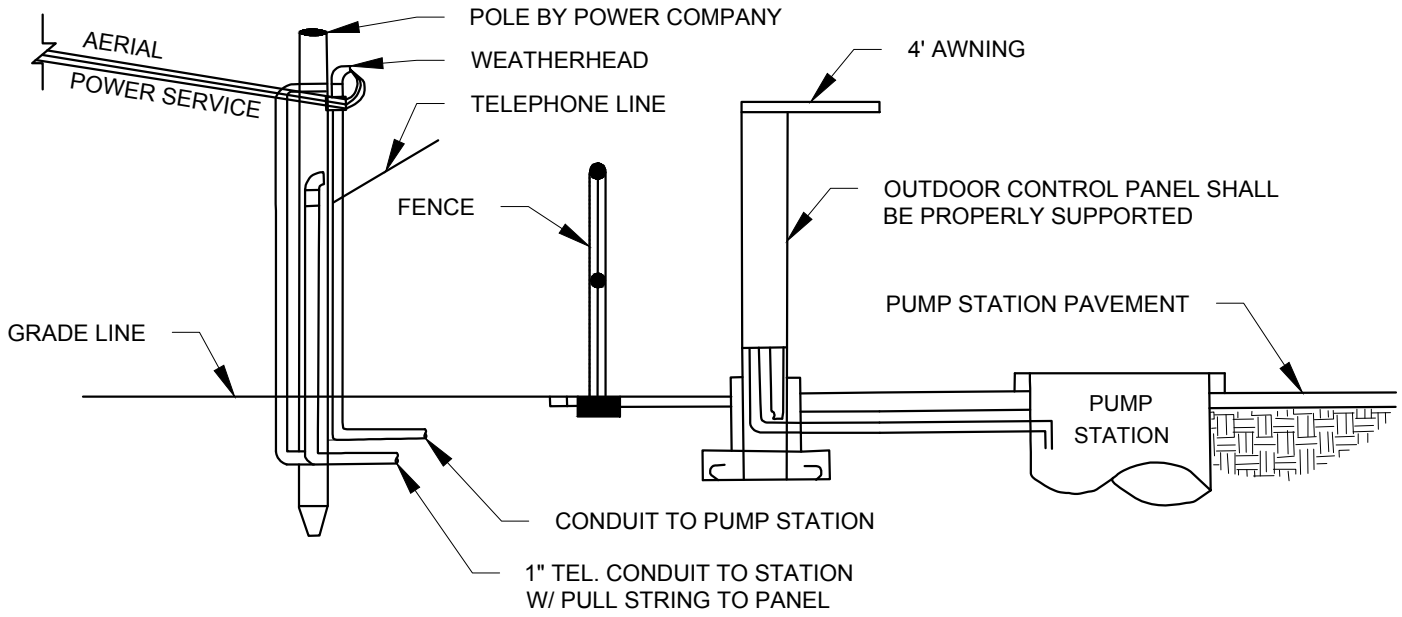

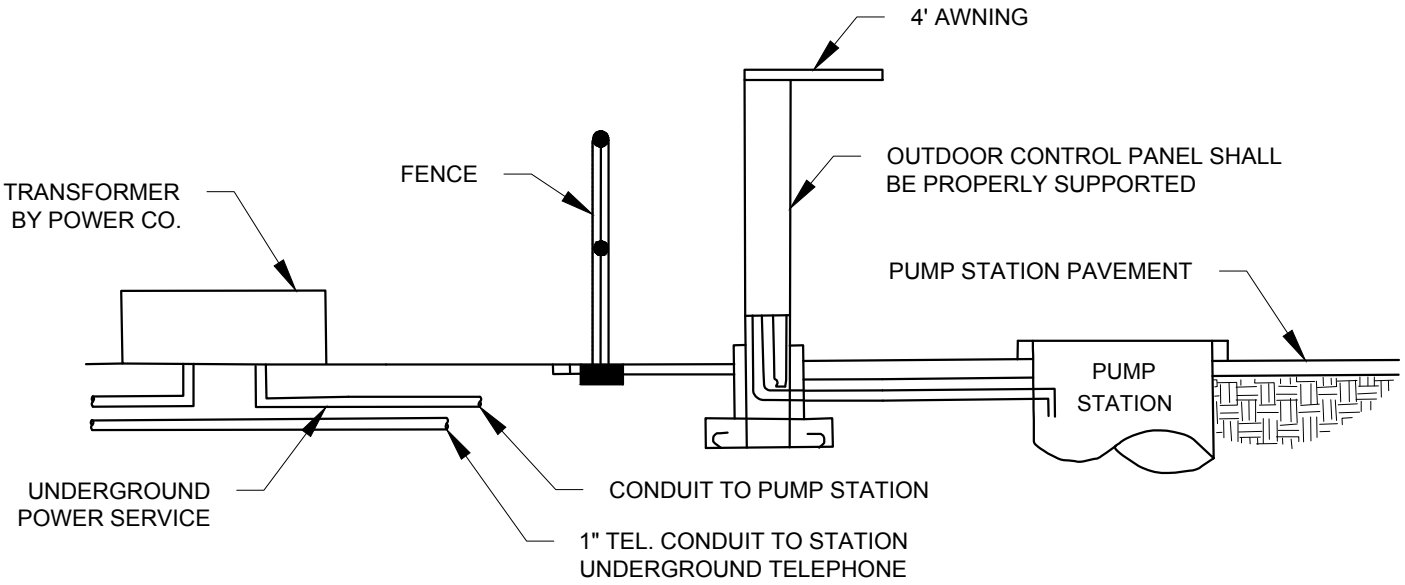

ALTERNATE

NOTES:

1. METER AND DISCONNECT SHALL BE PLACED ON ELECTRICAL/CONTROL PANEL SUPPORT. (MAIN BREAKER IS SHOWN ON P-022).

2. DISCONNECT SWITCH MUST BE LOCKABLE IN EACH POSITION.

spalding county SCWA water authority	SPALDING COUNTY WATER AUTHORITY	SPEC. DATE: 2024
	PUMP STATION OVERHEAD AND UNDERGROUND POWER DETAIL	REVISED: N/A
		SCALE: N.T.S.
		DETAIL NO. PS06

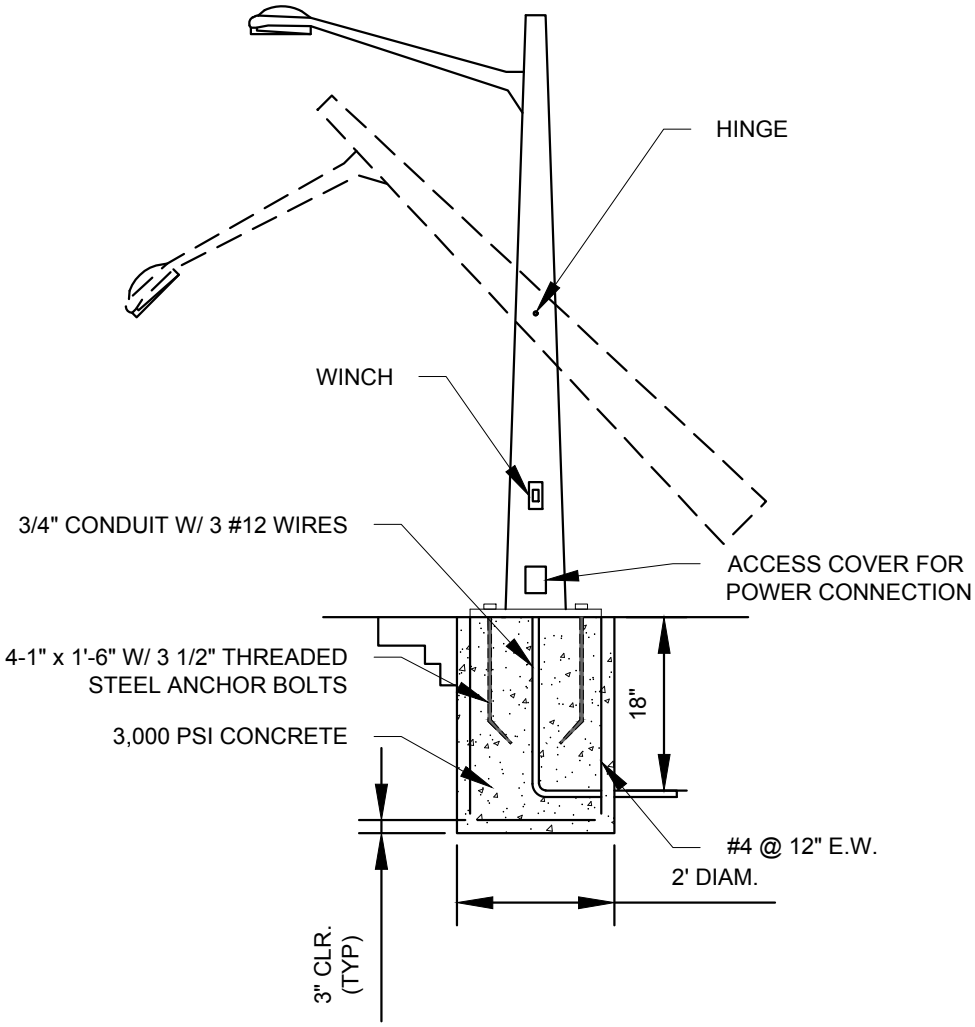

HIGH PRESSURE SODIUM SECURITY LIGHT ON 20' BREAK DOWN POLE

NOTES:

1. EXTERIOR HINGED LIGHT POLE WITH 150 WATT HIGH PRESSURE SODIUM LUMINAIRE, 120 VOLT BALLAST, PHOTOELECTRIC CONTROL, WITH HEAT AND IMPACT RESISTANT ACRYLIC LENS. POLE IS TO BE ARCHITECTURAL BROWN AND IS TO BE SUPPLIED WITH LOWERING WINCH

LUMINAIRE	→	GE PART # M2RR-15S1A2A-MN4
BRACKET	→	GE PART # RBSU2H6DB
POLE	→	GE PART # ASHS202T-6.4-11DB

2. BREAK DOWN POLE TO BE LOCATED INSIDE FENCE

spalding county SCWA water authority	SPALDING COUNTY WATER AUTHORITY	SPEC. DATE: 2024
		REVISED: N/A
		SCALE: N.T.S.
	YARD LIGHT	DETAIL NO. PS07

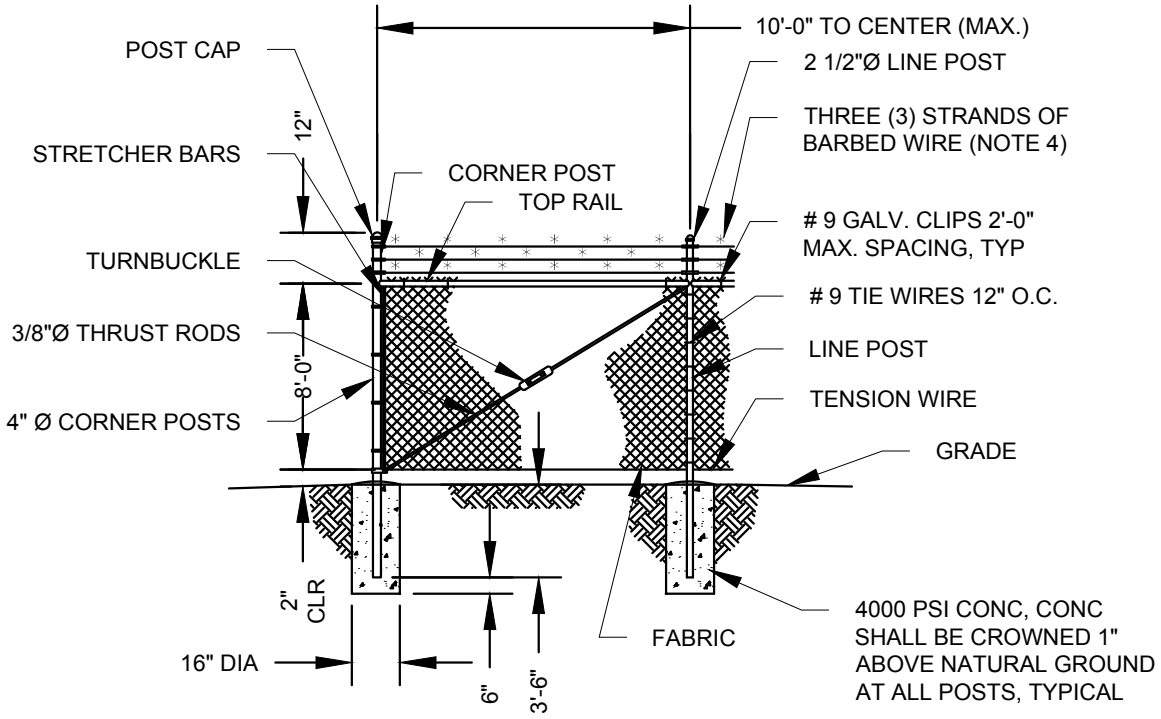

FENCING - CORNER DETAIL

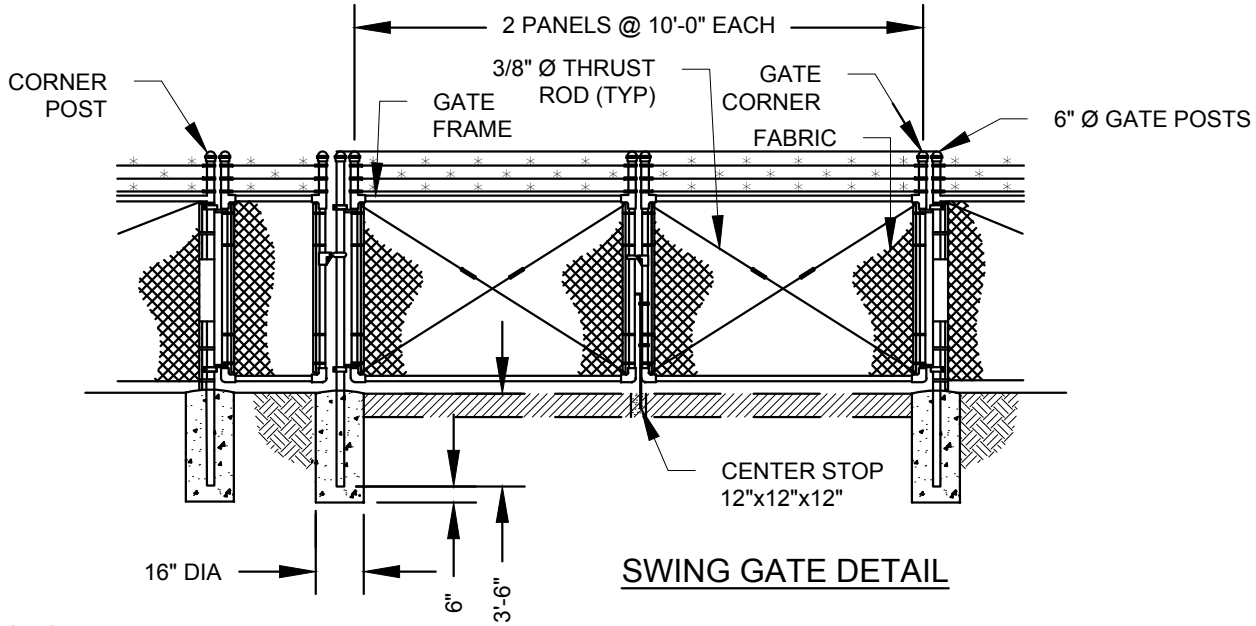

SWING GATE DETAIL

NOTES:

1. THRUST RODS ARE REQUIRED FOR EACH GATE SECTION AND THE FIRST SPAN ON EACH SIDE OF A CORNER POST ONLY.
2. TOP LOCK HDPE FENCE SLATS ARE REQUIRED FOR ALL PUMP STATION FENCES.
3. NUMBER 4 CHAINLINK WIRE FABRIC W/TOP RAILS.
4. THREE (3) STRANDS OF BARBED WIRE AT THE TOP ON ANGLED EXTENSION ARMS. GALVANIZED-STEEL BARBED WIRE SHALL CONSIST OF TWO STRANDS OF TWISTED NO. 12-1/2 GAGE WIRES WITH FOUR-(4)-POINT BARBS SPACED THREE (3) INCHES APART AND CONFORMING TO ASTM A121, WITH CLASS 3 ZINC COATING (MIN. OF 0.8 OZ OF ZINC COATING)

spalding county SCWA water authority	SPALDING COUNTY WATER AUTHORITY	SPEC. DATE: 2024
		REVISED: N/A
		SCALE: N.T.S.
	FENCE & GATE DETAIL	DETAIL NO. PS08

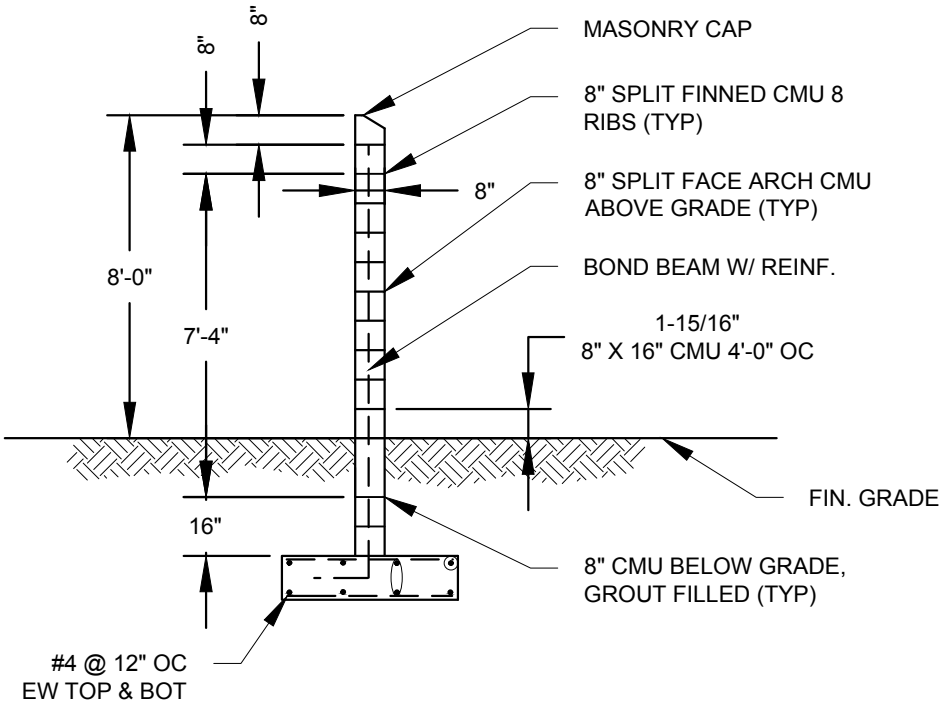

SECTION VIEW

NOTES:

1. DEVELOPER TO PROVIDE WALL DESIGN DRAWINGS SIGNED AND SEALED BY A PROFESSIONAL ENGINEER.

spalding county SCWA water authority	SPALDING COUNTY WATER AUTHORITY	SPEC. DATE: 2024
		REVISED: N/A
		SCALE: N.T.S.
	NOISE WALL	DETAIL NO. PS09

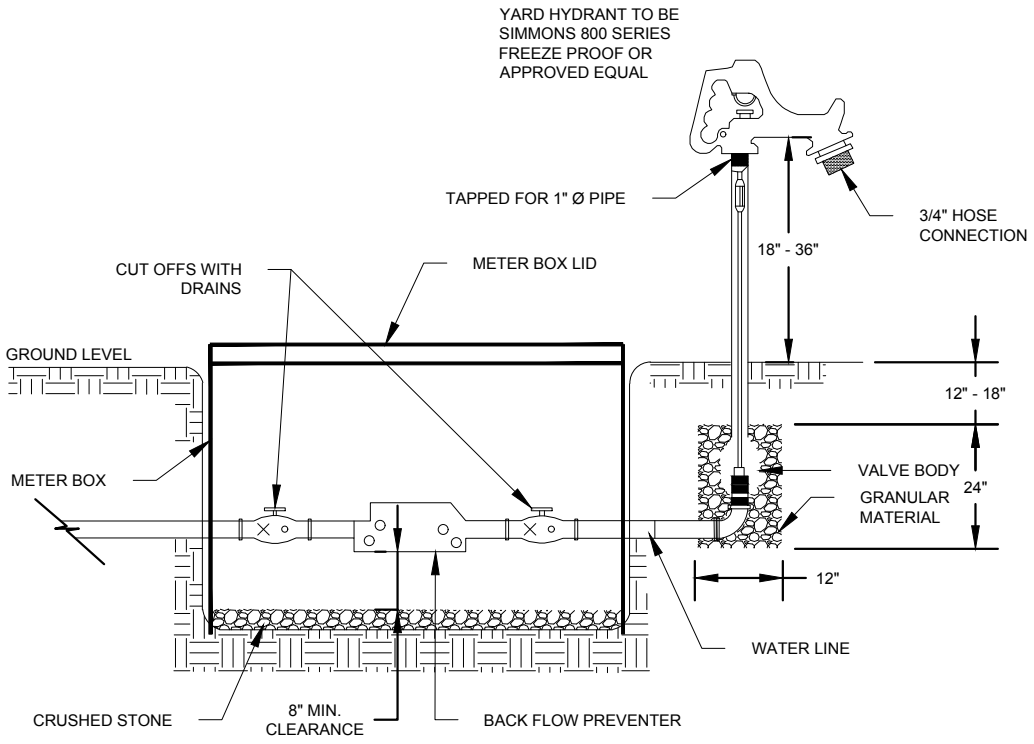

spalding county SCWA water authority	SPALDING COUNTY WATER AUTHORITY	SPEC. DATE: 2024
	HOSE BIB & BLACK FLOW PREVENTER	REVISED: N/A
		SCALE: N.T.S.
		DETAIL NO. PS10

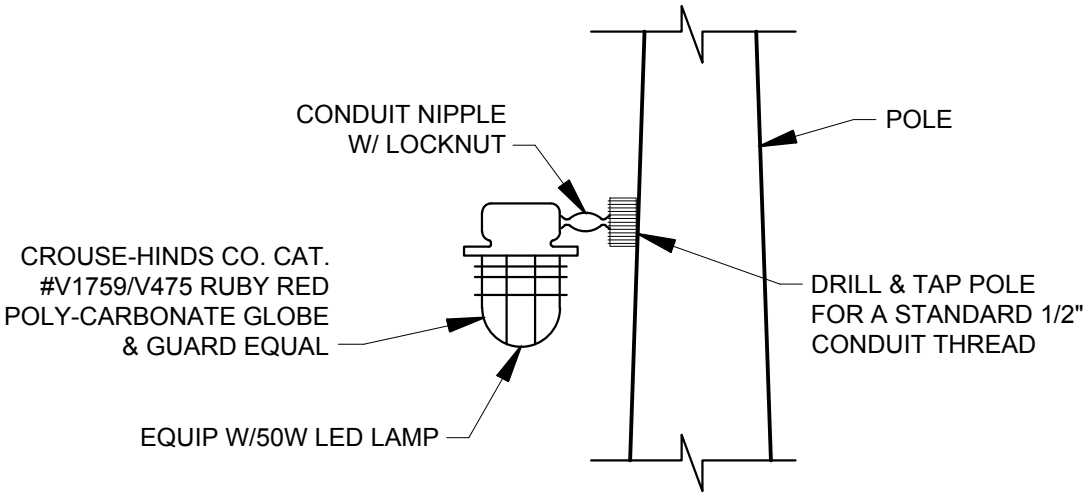

NOTES:

1. THE LUMINAIRE SHALL BE PHOTOELECTRIC AND SWITCH CONTROLLED.

spalding county SCWA water authority	SPALDING COUNTY WATER AUTHORITY	SPEC. DATE: 2024
	PUMP STATION HIGH WATER ALARM LIGHT MOUNTING DETAIL	REVISED: N/A
		SCALE: N.T.S.
		DETAIL NO. PS11

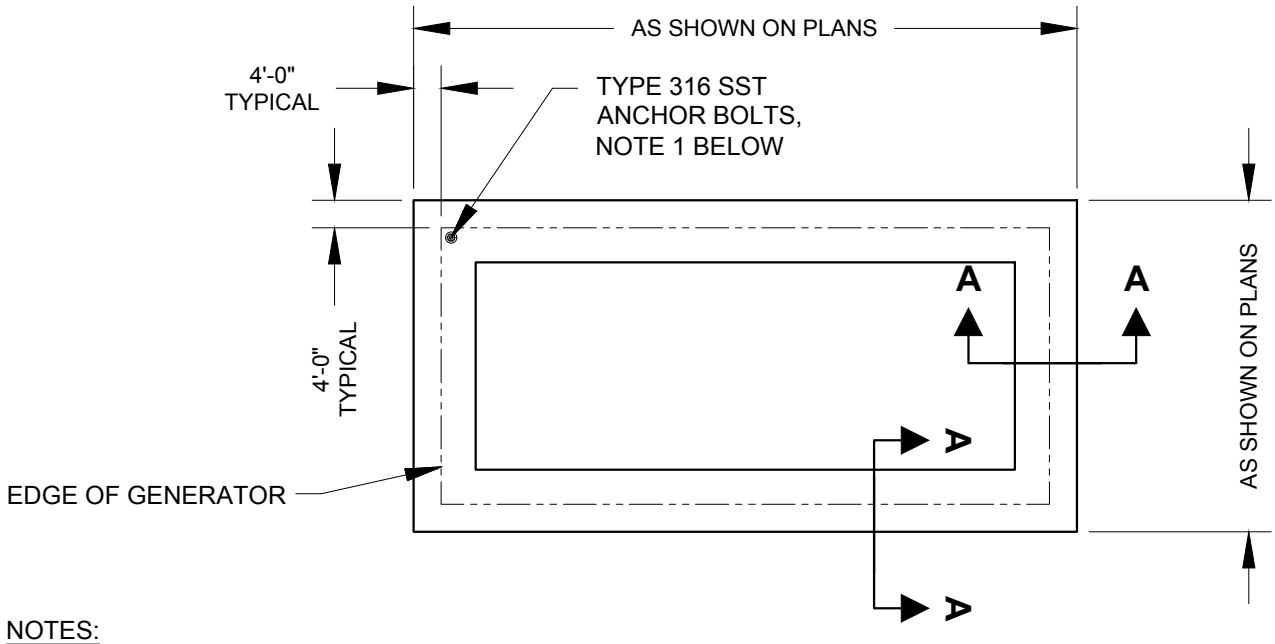

NOTES:

1. VERIFY QUANTITY, TYPE, DIAMETER AND LENGTH OF ANCHOR BOLTS REQUIRED BY MANUFACTURER PRIOR TO ORDERING AND/OR EMBEDDING FASTENERS IN CONCRETE SLAB.

2. DESIGN ENGINEER SHALL DESIGN GENERATOR SLAB TO MEET MINIMUM LOADING OF THE GENERATOR AND FUEL.

PLAN

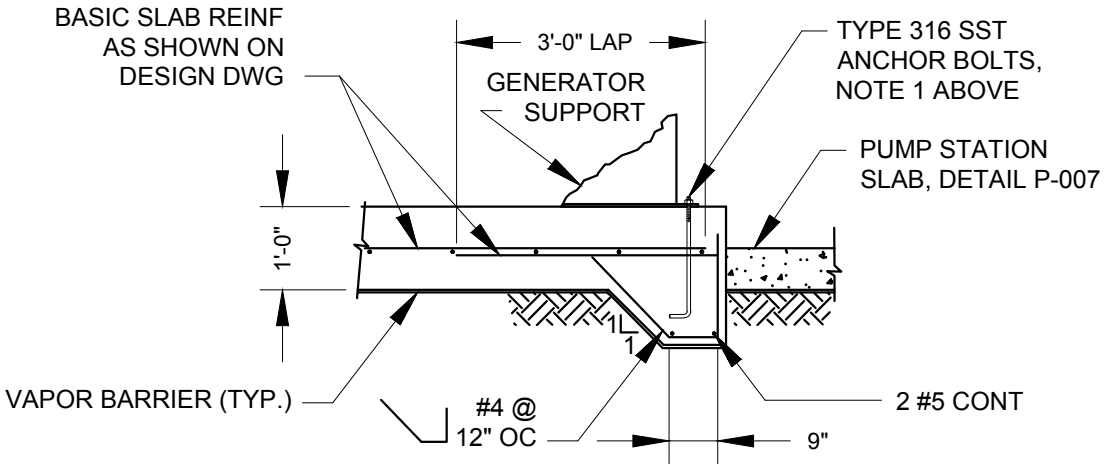

SECTION A-A

spalding county SCWA water authority	SPALDING COUNTY WATER AUTHORITY	SPEC. DATE: 2024
		REVISED: N/A
		SCALE: N.T.S.
	GENERATOR PAD DETAIL	DETAIL NO. PS12

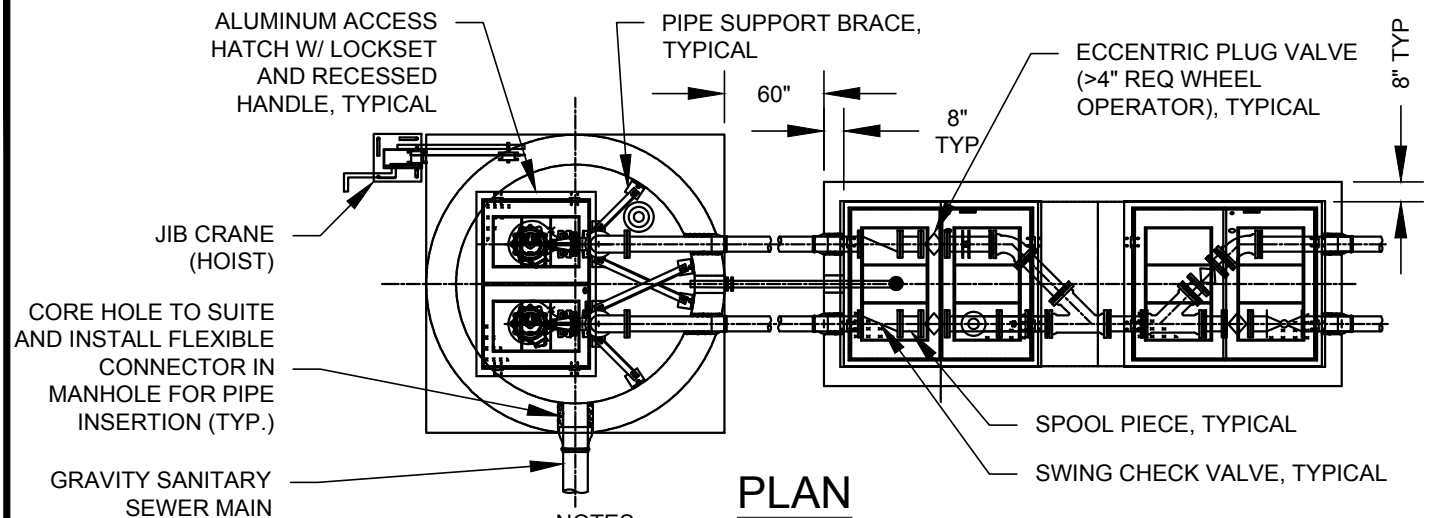

PLAN

NOTES:

1. MIN WET WELL DEPTH IS 8 FT.
2. MIN WET WELL DIAMETER IS 8 FT.
3. VALVE AND METER VAULT DIMENSIONS 12 FT X 6 FT MIN.
4. INSTALL FIBERGLASS TUB AS PART OF PRECAST BASE.
5. IF BASE OR CONE NOT PRECAST, SEE STANDARDS

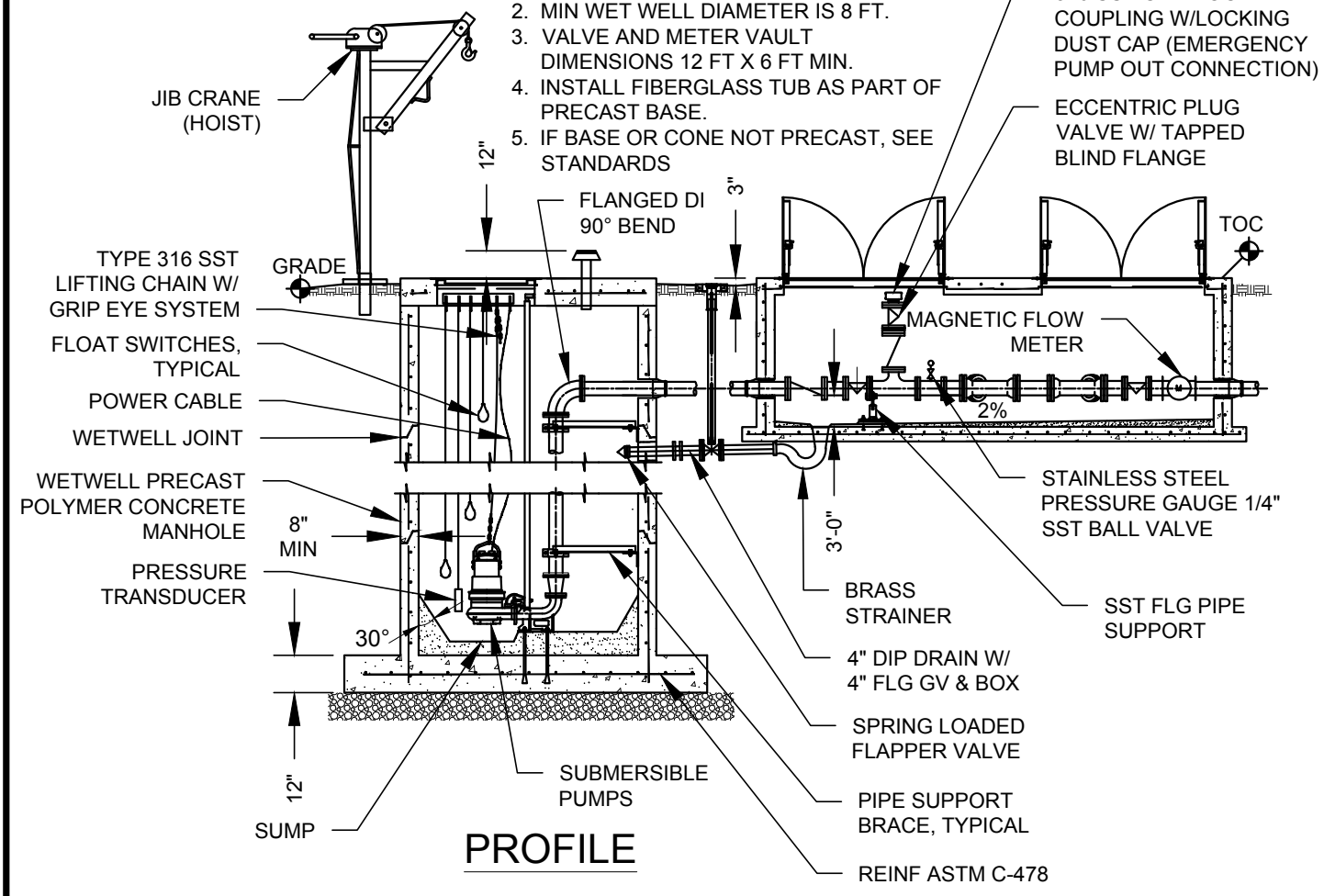

PROFILE

spalding county SCWA water authority	SPALDING COUNTY WATER AUTHORITY	SPEC. DATE: 2024
		REVISED: N/A
		SCALE: N.T.S.
	PUMP STATION DETAIL	DETAIL NO. PS13

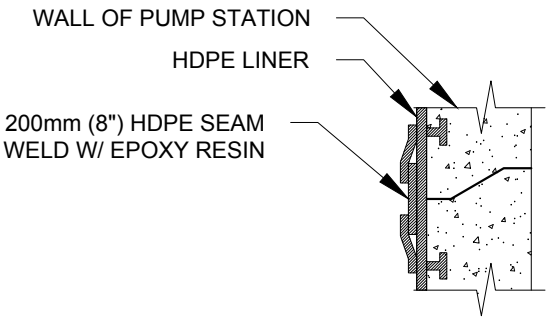

DETAIL "A"
PUMP STATION
JOINT SECTIONS

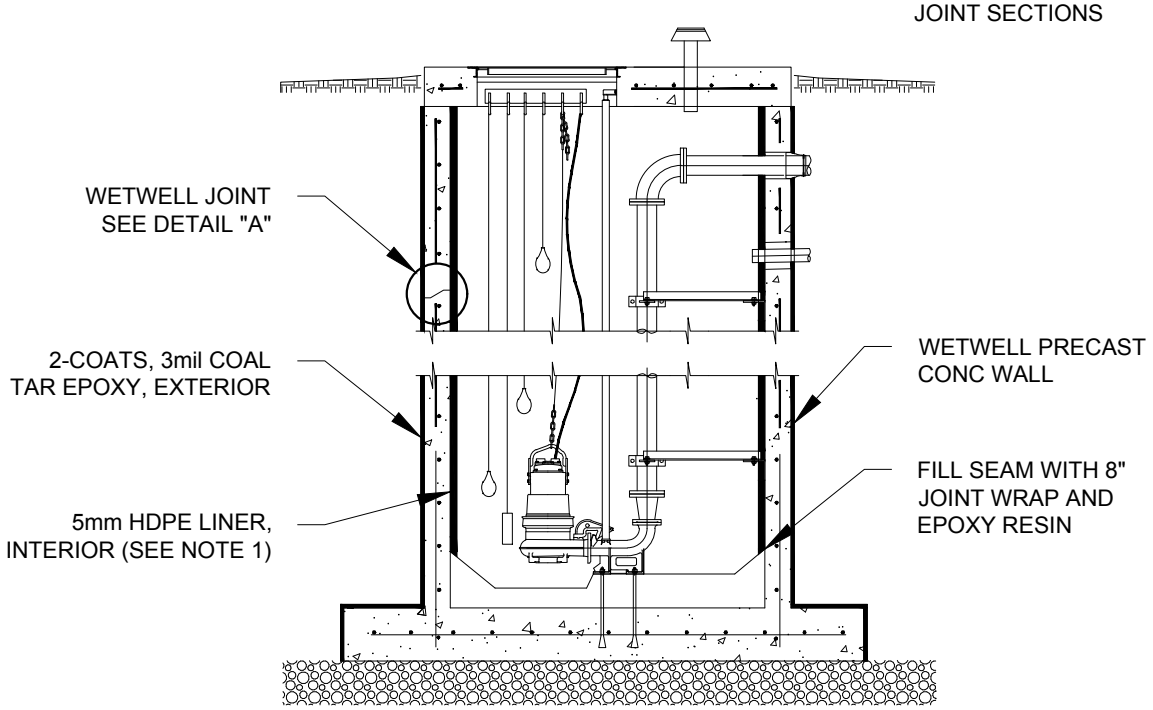

NOTES:

1. ADD SPRAYABLE EPOXY MEETING MANUFACTURER'S MINIMUM REQUIREMENTS AND THICKNESS MAY BE USED IN LIEU OF 5mm HDPE LINER. IF THIS PRODUCT IS APPROVED, THE ENTIRE INTERIOR AREA OF THE WET WELL WILL BE COATED (WALLS AND TUB).

2. ALL WETWELLS SHALL BE POLYMER CONCRETE UNLESS APPROVED OTHERWISE BY SCWA.

spalding county SCWA water authority	SPALDING COUNTY WATER AUTHORITY	SPEC. DATE: 2024
	PUMP STATION COATING DETAIL FOR HDPE LINER	REVISED: N/A
		SCALE: N.T.S.
		DETAIL NO. PS14

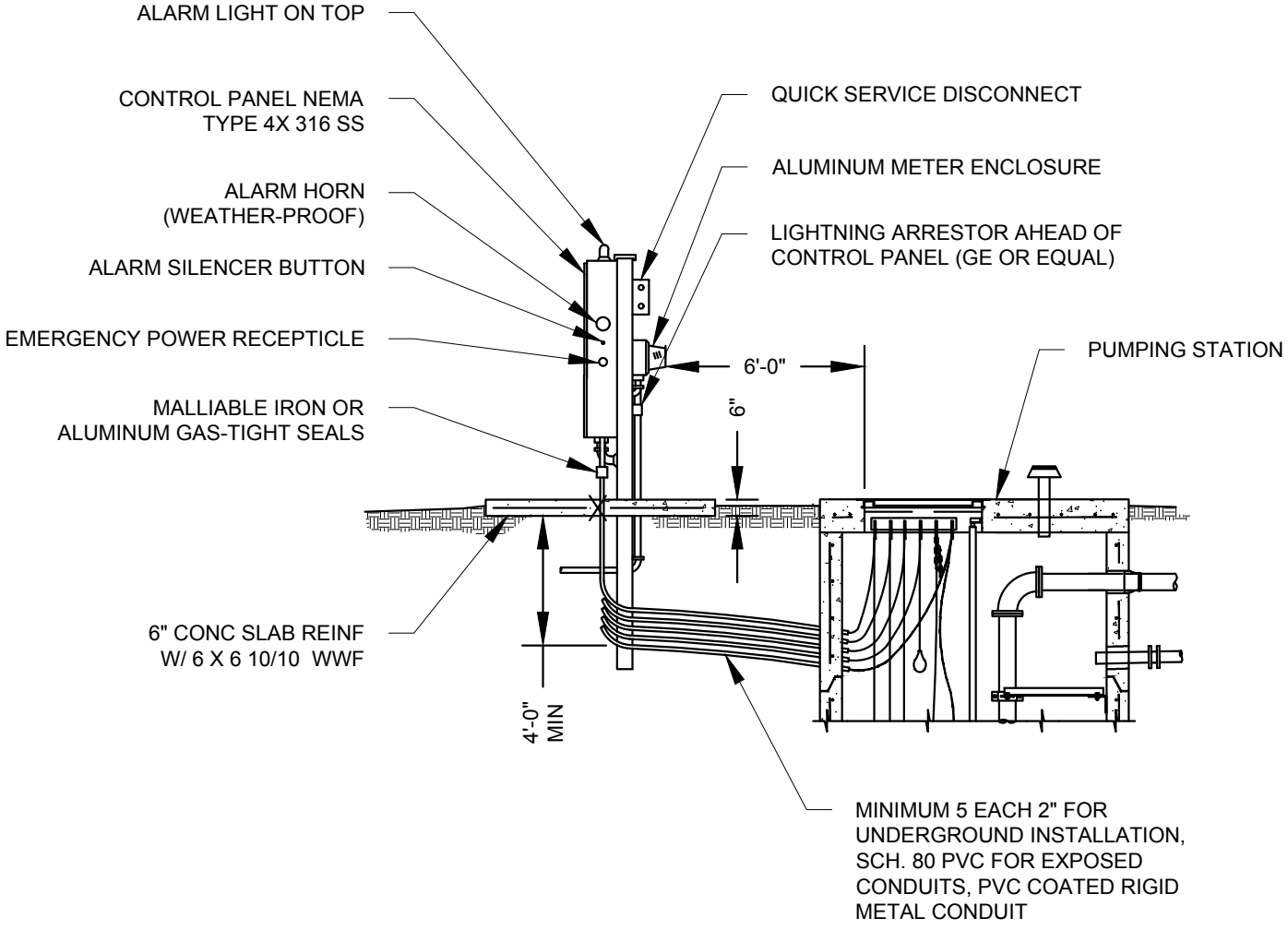

SECTION

NOTES:

1. CONTROL PANEL 4 FT. WIDE BY 8 FT. HIGH AWNING NOT SHOWN FOR CLARITY.

spalding county SCWA water authority	SPALDING COUNTY WATER AUTHORITY	SPEC. DATE: 2024
	PUMP STATION CABLE DETAIL	REVISED: N/A
		SCALE: N.T.S.
		DETAIL NO. PS15

LEGEND

AH	-	ALARM HORN
AL	-	ALARM LIGHT
ASB	-	ALARM SILENCE BUTTON
ATS	-	ALTERNATOR TEST SWITCH
CCB	-	CONTROL CIRCUIT BREAKER
DPDT	-	DOUBLE POLE DOUBLE THROW
DRB	-	DUPLEX RECEPTACLE BREAKER
ECB	-	ELAPSE TIME METER
F	-	FUSE
FB	-	FUSE BLOCK
FL	-	FLASHER
FR	-	FLOAT REGULATOR
GFDR	-	GROUND FAULT DUPLEX RECEPTACLE
GR	-	GENERATOR RECEPTACLE
HOA	-	HANDS-OFF-AUTO SELECTOR SWITCH
MB	-	MOTOR BREAKER
MCB	-	MAIN BREAKER
MS	-	MOTOR STARTER
OL	-	OVERLOAD
PL	-	PILOT LIGHT
PM	-	PHASE MONITOR
R	-	RELAY
RCB	-	RTU CIRCUIT BREAKER
RL	-	RUNNING LIGHT
RTU	-	REMOTE TRANSMITTING UNIT
TB	-	TERMINAL BLOCK
TTS	-	THERMAL TERMINAL STRIP
TVSS	-	TRANSIENT VOLTAGE SURGE SUPPRESSER
XFMR	-	TRANSFORMER

spalding county SCWA water authority

SPALDING COUNTY WATER AUTHORITY

SPEC. DATE: 2024

REVISED: N/A

SCALE: N.T.S.

ELECTRICAL LEGEND

DETAIL NO.

PS16

PUMPING STATION RTU CONNECTIONS

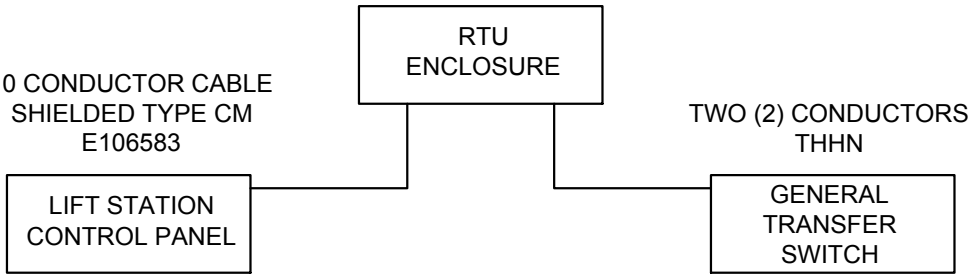

RTU ENCLOSURE

MIXED I/O MODULE

	1	SPARE
	2	SPARE
	3	SPARE
	4	SPARE
	5	SPARE
FROM RTU ENCLOSURE DOOR LIMIT	6	SITE SECURITY
	7	PUMP 3 FAILURE*
	8	PUMP 4 FAILURE*
#14 AWG FROM GEN TRANS	9	GENERATOR RUNNING
	10	PUMP 1 FAILURE
	11	PUMP 2 FAILURE
	12	HIGH WET WELL
	13	
	14	COMMON
	15	SPARE
	16	SPARE
	17	SPARE
	18	SPARE
	19	SPARE
	20	SPARE
	21	SPARE
	22	SPARE
	23	SPARE
	24	SPARE

* IF NEEDED

SPALDING COUNTY WATER AUTHORITY

SPEC. DATE: 2024

REVISED: N/A

SCALE: N.T.S.

PUMP STATION RTU CONNECTIONS

DETAIL NO.

PS17

BASIC LIFT STATION CONTROL PANEL - RTU ALARM INPUTS

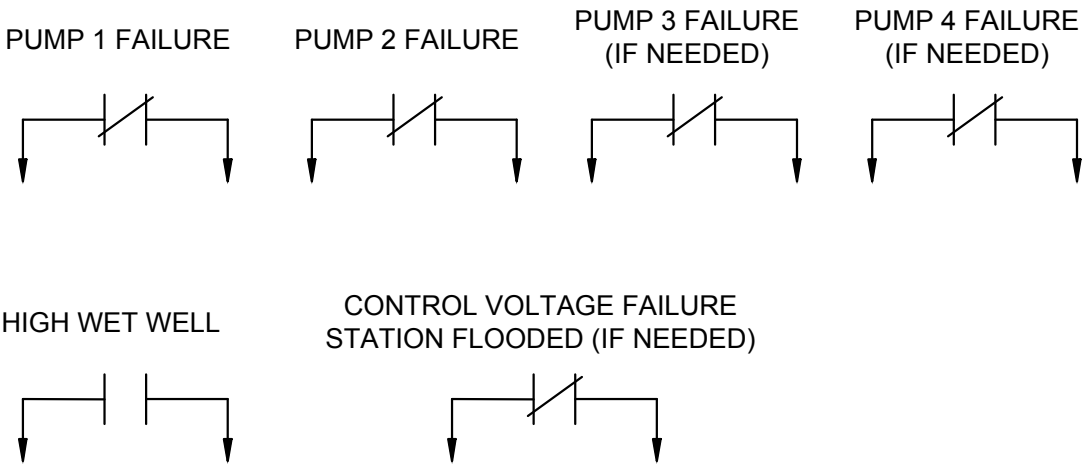

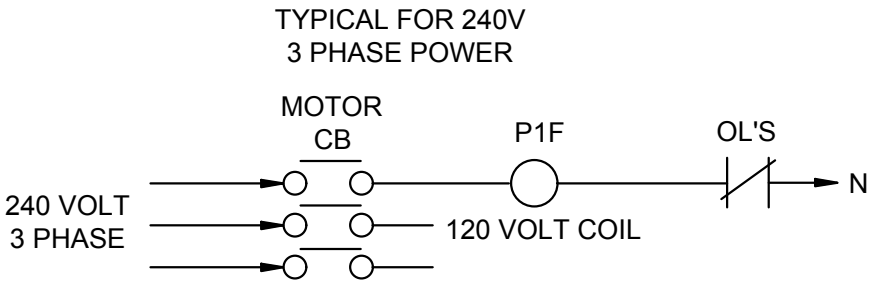

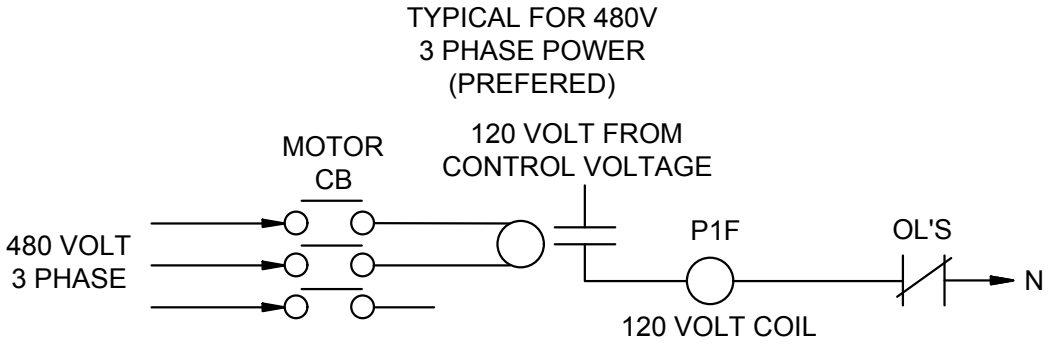

RELAY TYPE: 480 VOLT AC COIL, PORTER & BRUMFIELD PRD-11AYO-480 OR EQUAL.

spalding county SCWA water authority	SPALDING COUNTY WATER AUTHORITY	SPEC. DATE: 2024
	BASIC PUMP STATION CONTROL PANEL DETAIL RTU ALARM INPUTS	REVISED: N/A
		SCALE: N.T.S.
		DETAIL NO. PS18

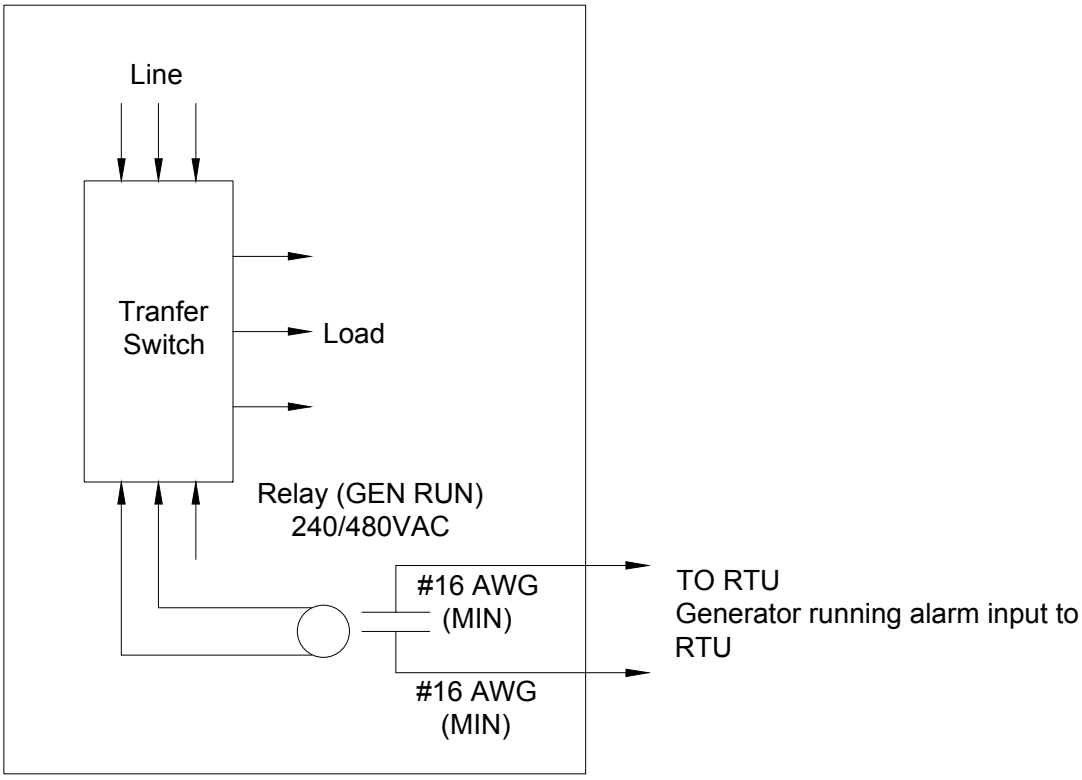

NOTES:

1. RELAY TYPES: 240VAC COIL, 8 PIN CUBE TYPE; 480VAC COIL PORTER & BRUMFIELD PRD-11AYO-480 OR EQUAL

spalding county SCWA water authority	SPALDING COUNTY WATER AUTHORITY	SPEC. DATE: 2024
	PUMP STATION GENERATOR TRANSFER SWITCH GENERATOR RUN ALARM	REVISED: N/A
		SCALE: N.T.S.
		DETAIL NO. PS19

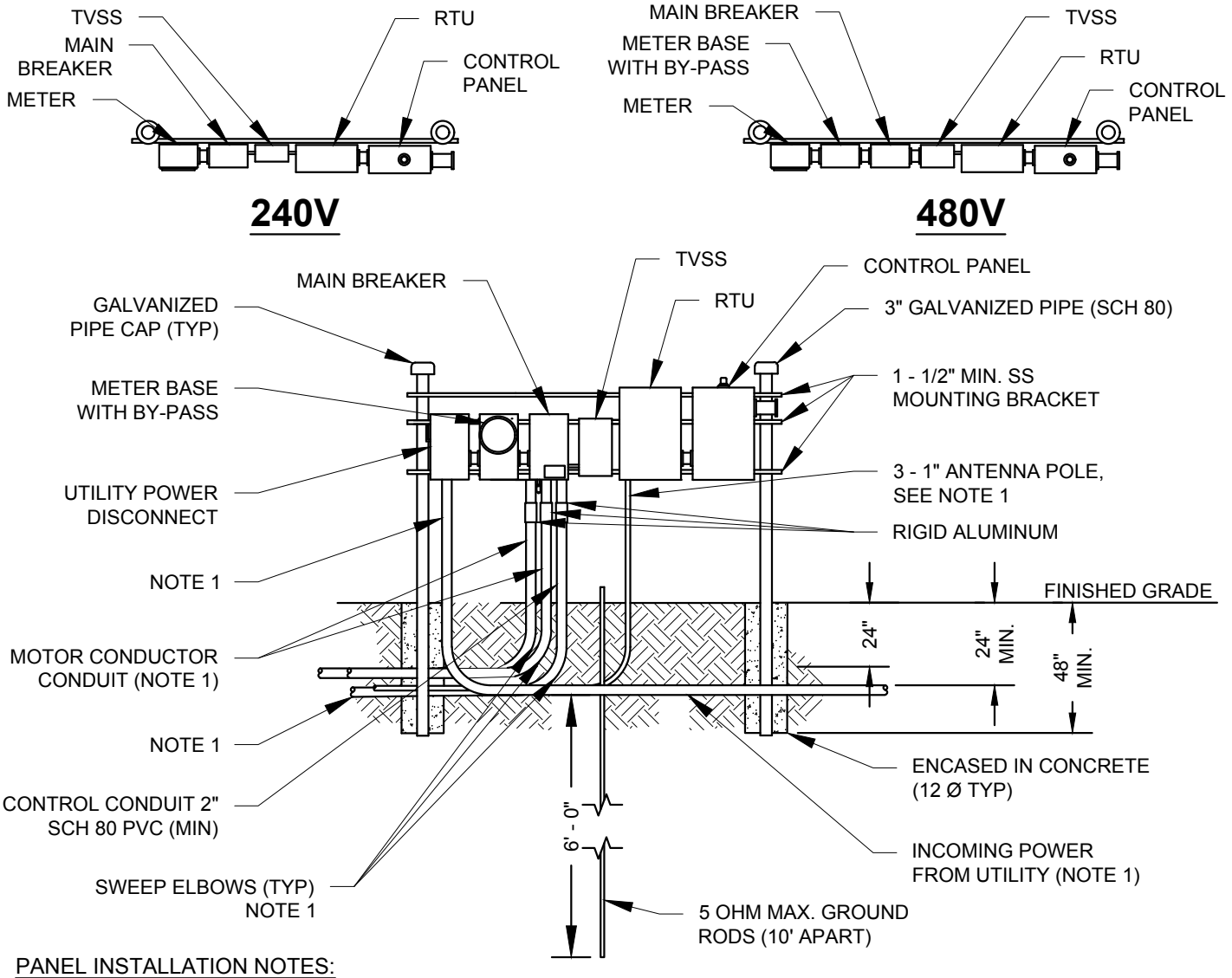

PANEL INSTALLATION NOTES:

1. TO BE MINIMUM 2" SCH 80 PVC COATED RIDGED METAL CONDUIT BY REDHZOT.
2. POWER SUPPLY SHALL BE UNDERGROUND ON THE LIFT STATION SITE AND SHALL BE 3-PHASE, FROM A 3-PHASE SOURCE ONLY.
3. AN ELECTRICAL GROUNDING SYSTEM SHALL BE INSTALLED AS PER THE NATIONAL ELECTRICAL CODE, LOCAL CODES AND ORDINANCES. AN UNDERGROUND PERIMETER CABLE GROUNDING SYSTEM SHALL BE INSTALLED WITH CONNECTIONS To AT LEAST WET WELL COVER, VALVE VAULT COVER, CONTROl PANELS, GENERATOR, UTILITY COMPANY TRANSFORMER, MANUAL DISCONNECT SWITCH AND METAL FENCE.
4. THE STATION NAME, UTILITIES I.D. NUMBER AND ADDRESS SHALL BE AFFIXED TO THE FRONT OF THE METER CABINET.
5. ALL MOUNTING HARDWARE & BRACKETS SHALL BE 316 STAINLESS STEEL.
6. ON A 4-WIRE, DELTA SYSTEM, THE HIGH-LEG SHALL BE IDENTIFIED WITH ORANGE COLOR TAPE AT ALL CONNECTION POINTS AND SHALL BE LOCATED ON THE "B" PHASE AT THE LINE SIDE OF THE MAIN DISCONNECT.
7. PANELS AND ELECTRICAL CABINETS SHALL BE COVERED WITH A 4 FT. BY 8 FT. AWNING (NOT SHOWN).
8. 240V AND 480V ARE THE SAME EXCEPT INCOMING POWER METER WITH Y-PASS, FOR 240V, NO UTILITY POWER DISCONNECT.

spalding county SCWA water authority	SPALDING COUNTY WATER AUTHORITY	SPEC. DATE: 2024
	PUMP STATION CONTROL PANEL FOR (240V) AND (480V)	REVISED: N/A
		SCALE: N.T.S.
		DETAIL NO. PS20

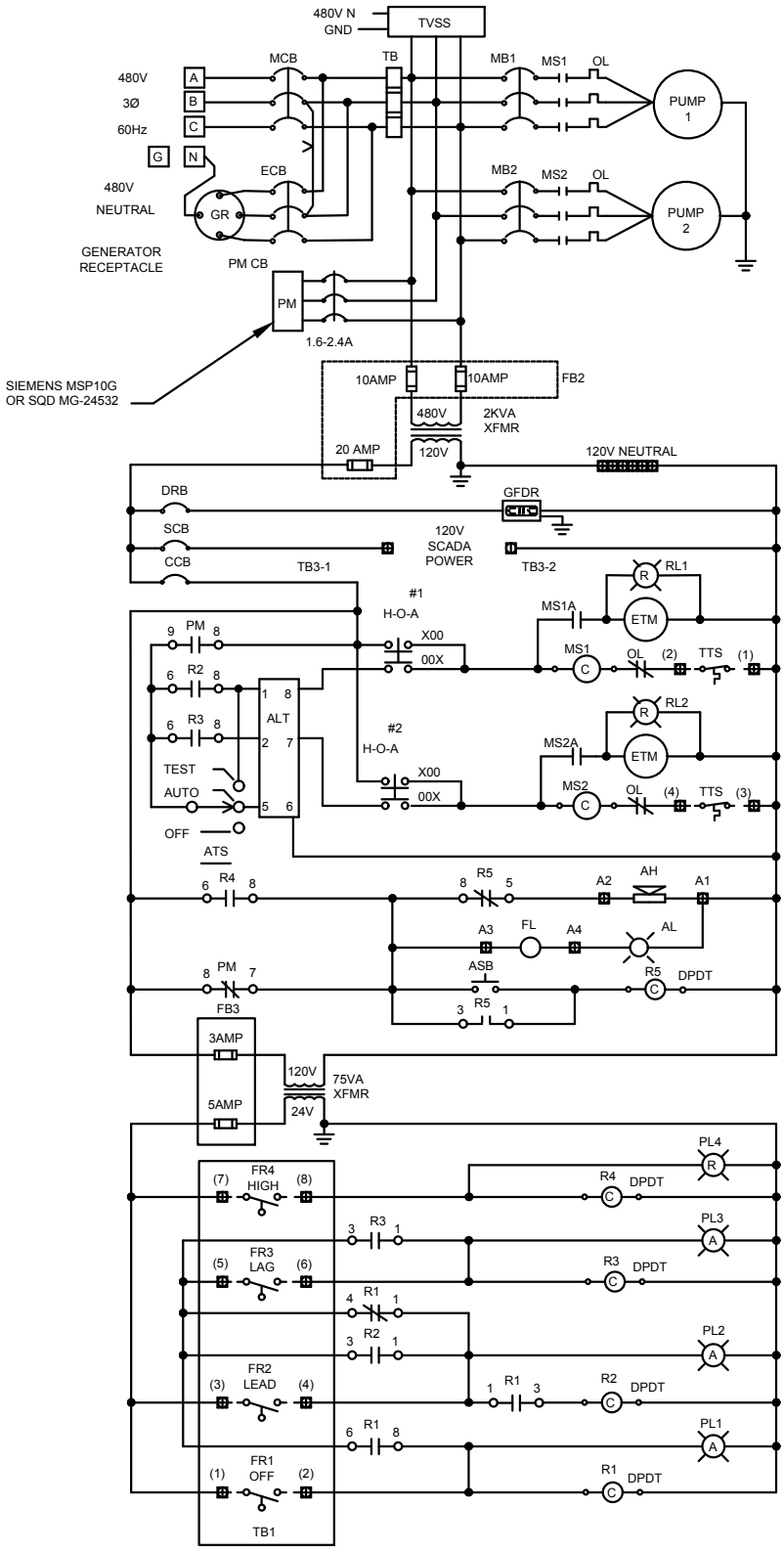

spalding county SCWA water authority	SPALDING COUNTY WATER AUTHORITY	SPEC. DATE: 2024
	EXAMPLE DUPLEX PUMP CONTROL SCHEMATIC (480V)	REVISED: N/A
		SCALE: N.T.S.
		DETAIL NO. PS21

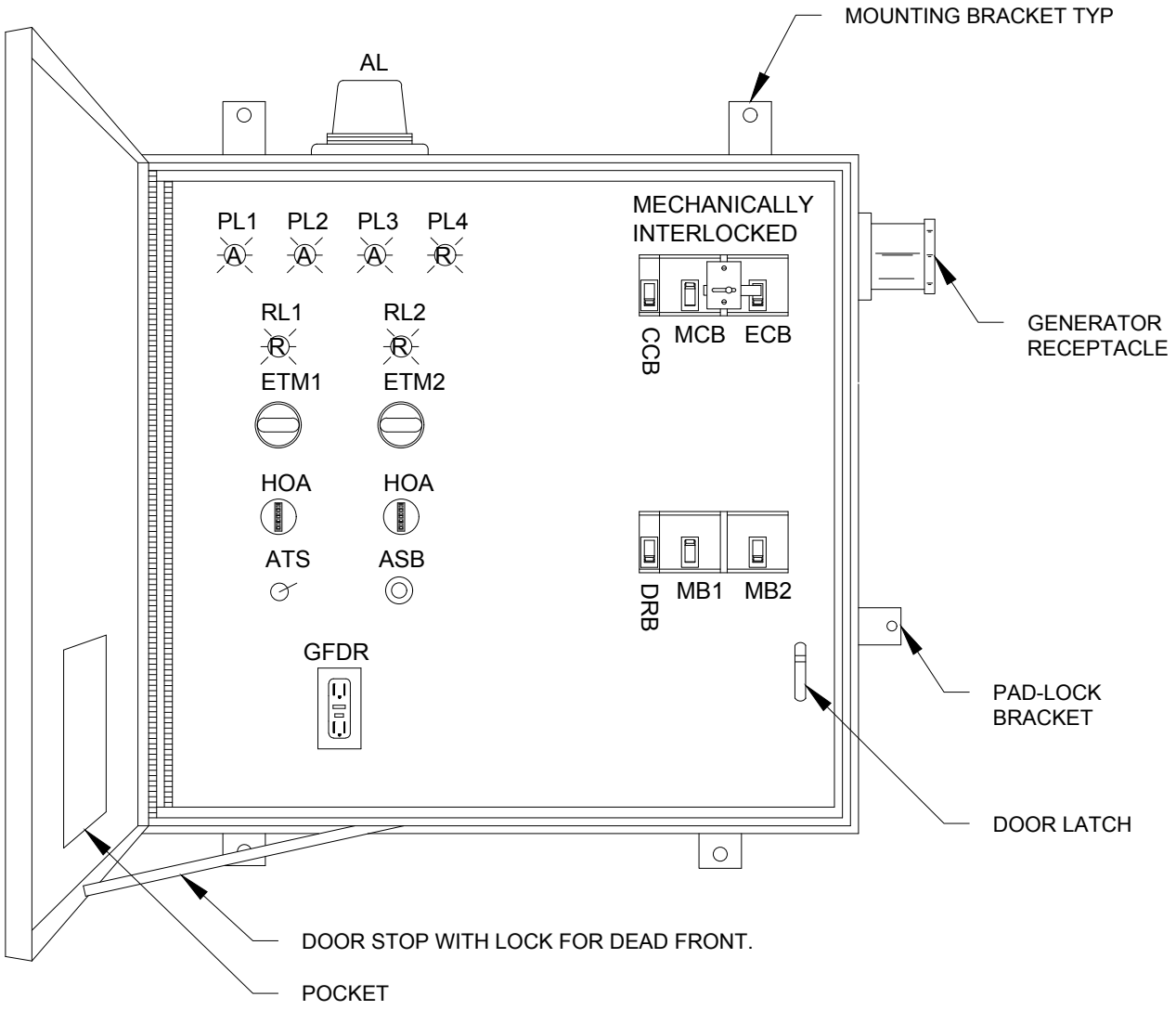

NOTES:

1. NEMA TYPE 3R BOX AND ALL HARDWARE AND BRACKETS SHALL BE 316 SS.
2. ALL CONTROL WIRE TO BE #16 AWG, MINIMUM.
3. CONTROL PANEL SHALL BE UL LISTED AND LABELED.

spalding county SCWA water authority	SPALDING COUNTY WATER AUTHORITY	SPEC. DATE: 2024
	EXAMPLE DUPLEX CONTROL PANEL ENCLOSURE DEAD FRONT LAYOUT	REVISED: N/A
		SCALE: N.T.S.
		DETAIL NO. PS22

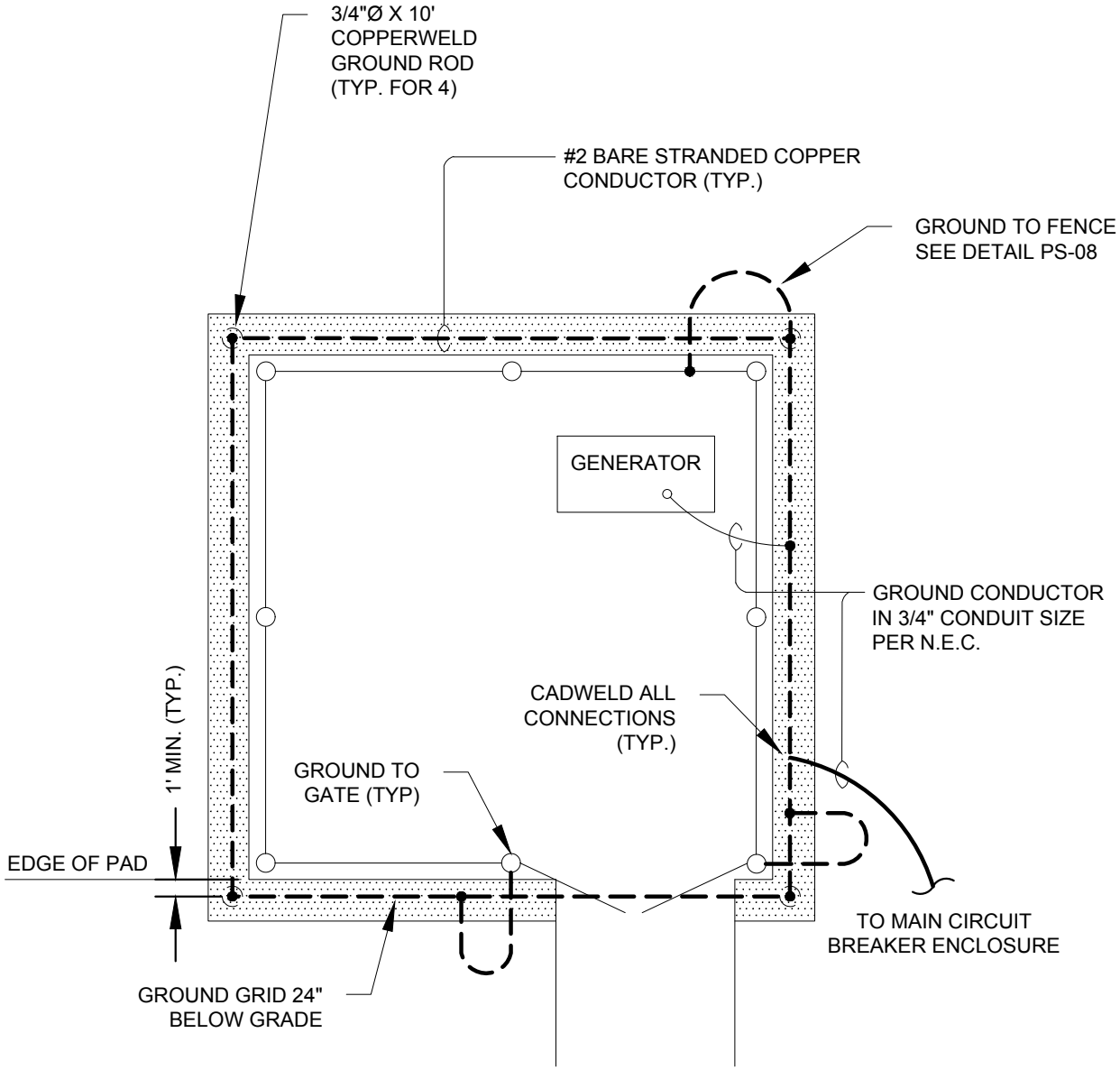

spalding county SCWA water authority	SPALDING COUNTY WATER AUTHORITY	SPEC. DATE: 2024
	PUMP STATION GROUNDING DETAIL	REVISED: N/A
		SCALE: N.T.S.
		DETAIL NO. PS23

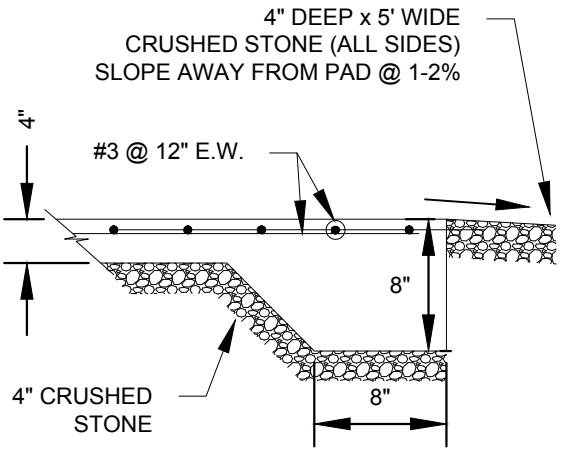

1 TYPICAL SLAB DETAIL

N.T.S.

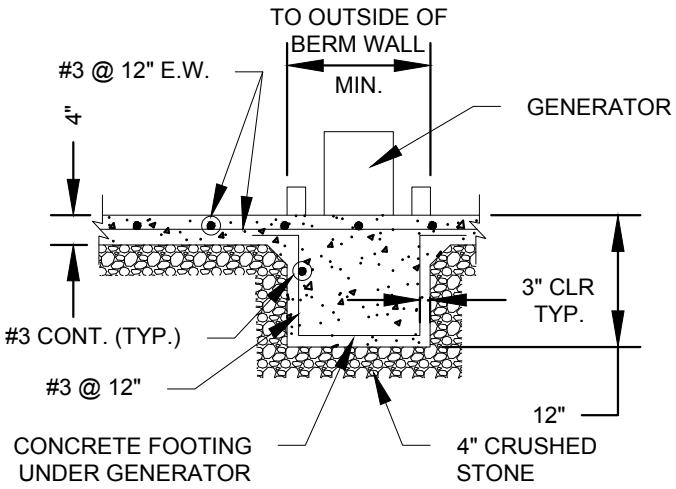

2 GENERATOR FOOTING

N.T.S.

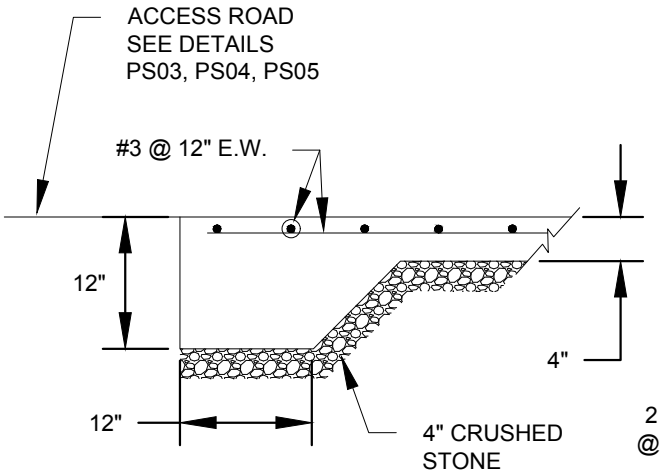

3 SLAB AT ENTRANCE GATE

N.T.S.

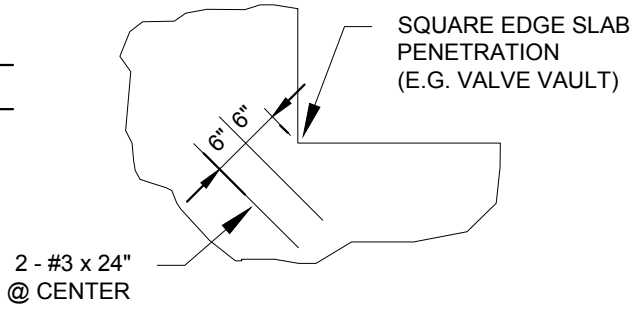

4 PLAN-SQUARE EDGE PENETRATION AT SLAB (TYP)

N.T.S.

spalding county SCWA water authority	SPALDING COUNTY WATER AUTHORITY	SPEC. DATE: 2024
	PUMP STATION CONCRETE SLAB DETAILS	REVISED: N/A
		SCALE: N.T.S.
		DETAIL NO. PS24

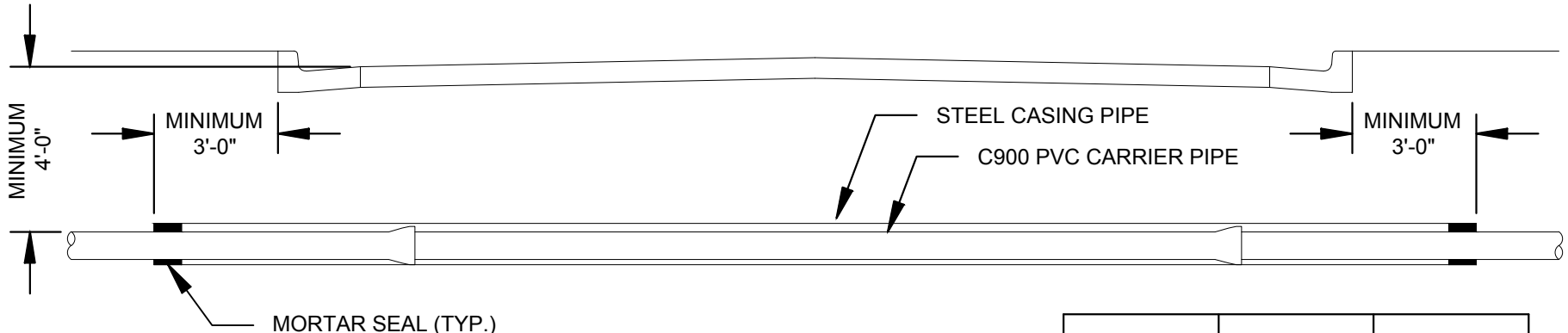

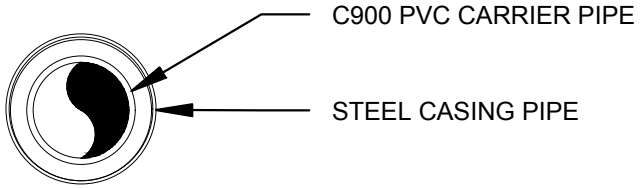

CARRIER PIPE NOMINAL DIAMETER (IN)	CASING PIPE NOMINAL DIAMETER (IN)	CASING PIPE THICKNESS (IN)
8	12	0.2500
10	16	0.2500
12	18	0.3130
16	24	0.3750

NOTES:

1. ENDS OF CASING PIPE SHALL BE SEALED WITH CEMENT MORTAR.
2. ALL COUNTY ROAD CROSSINGS SHALL BE INSTALLED IN ACCORDANCE WITH SPALDING COUNTY DOT STANDARDS AND PERMIT REQUIREMENTS.
3. ALL STATE HIGHWAY CROSSINGS SHALL BE INSTALLED IN ACCORDANCE WITH GEORGIA DOT STANDARDS AND PERMIT REQUIREMENTS.
4. ALL RAILROAD CROSSINGS SHALL BE INSTALLED IN ACCORDANCE WITH AMERICAN RAILWAY ENGINEERING ASSOCIATION REGULATIONS AND IN ACCORDANCE WITH PERMIT REQUIREMENTS.

SPALDING COUNTY WATER AUTHORITY

TYPICAL JACK AND BORE DETAIL SANITARY SEWER FORCE MAIN

SPEC. DATE: 2024

REVISED: N/A

SCALE: N.T.S.

DETAIL NO.

PS25

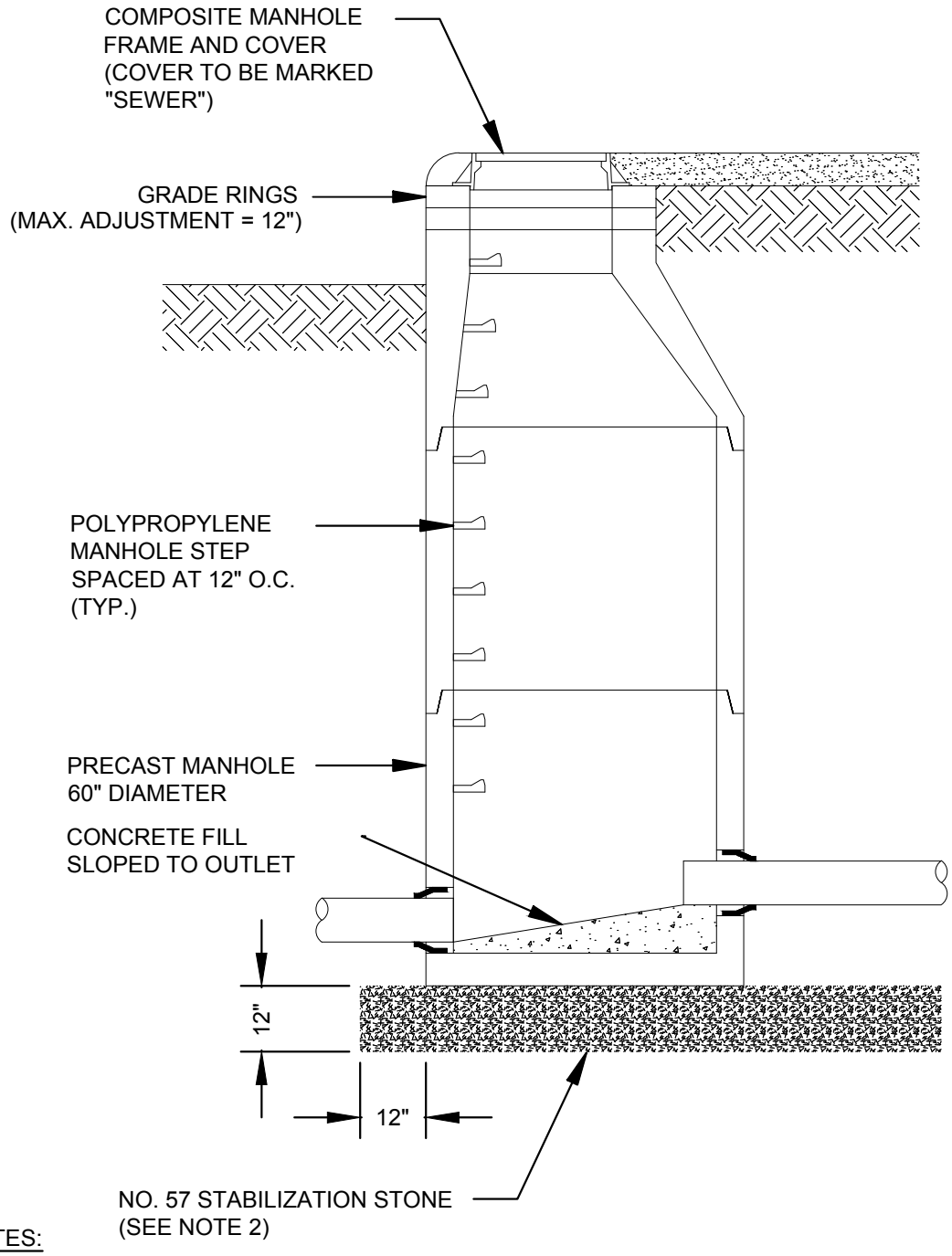

NOTES:

1. DISCHARGE MANHOLE AND MANHOLES 1,600 FEET UPSTREAM AND DOWNSTREAM OF TIE-IN SHALL BE LINED WITH SPECTRASHIELD'S TOTAL LINING SYSTEM FOR WASTEWATER STRUCTURES AS MANUFACTURED BY CCI SPECTRUM, OR SCWA APPROVED EQUAL.
2. IN DRIVEWAYS OR R/W COMPACT SUBGRADE TO 95% STANDARD PROCTOR / PROVIDE CONCRETE LEVELING PAD WHERE SOILS ARE POOR. IN YARDS, COMPACT SUBGRADE TO 90% STANDARD PROCTOR.

spalding county SCWA water authority	SPALDING COUNTY WATER AUTHORITY	SPEC. DATE: 2026
	SANITARY FORCE MAIN DISCHARGE MANHOLE	REVISED: N/A
		SCALE: N.T.S.
		DETAIL NO. PS26

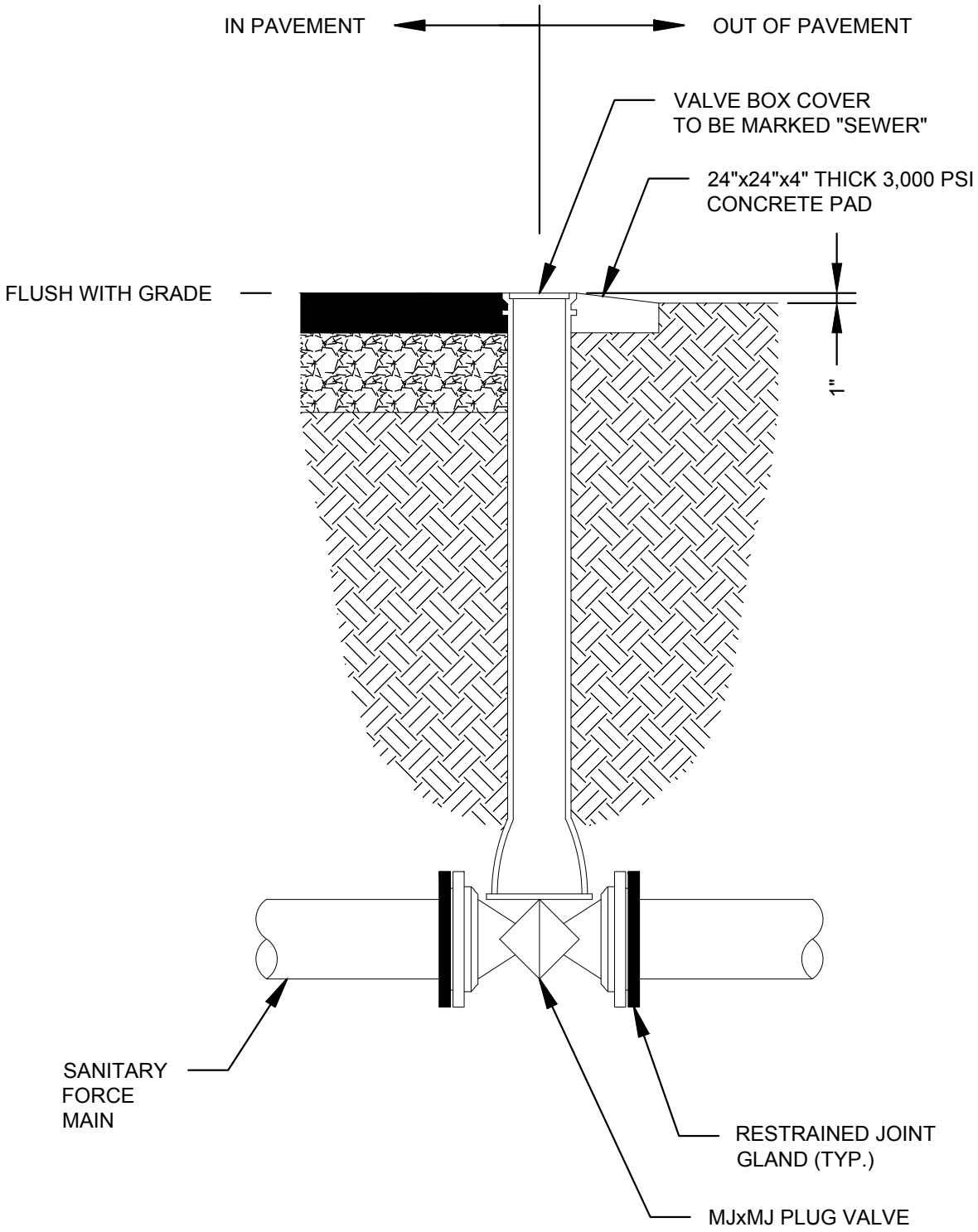

SPALDING COUNTY WATER AUTHORITY

SANITARY SEWAGE FORCE MAIN ISOLATION VALVE

SPEC. DATE: 2024

REVISED: N/A

SCALE: N.T.S.

DETAIL NO.

PS27

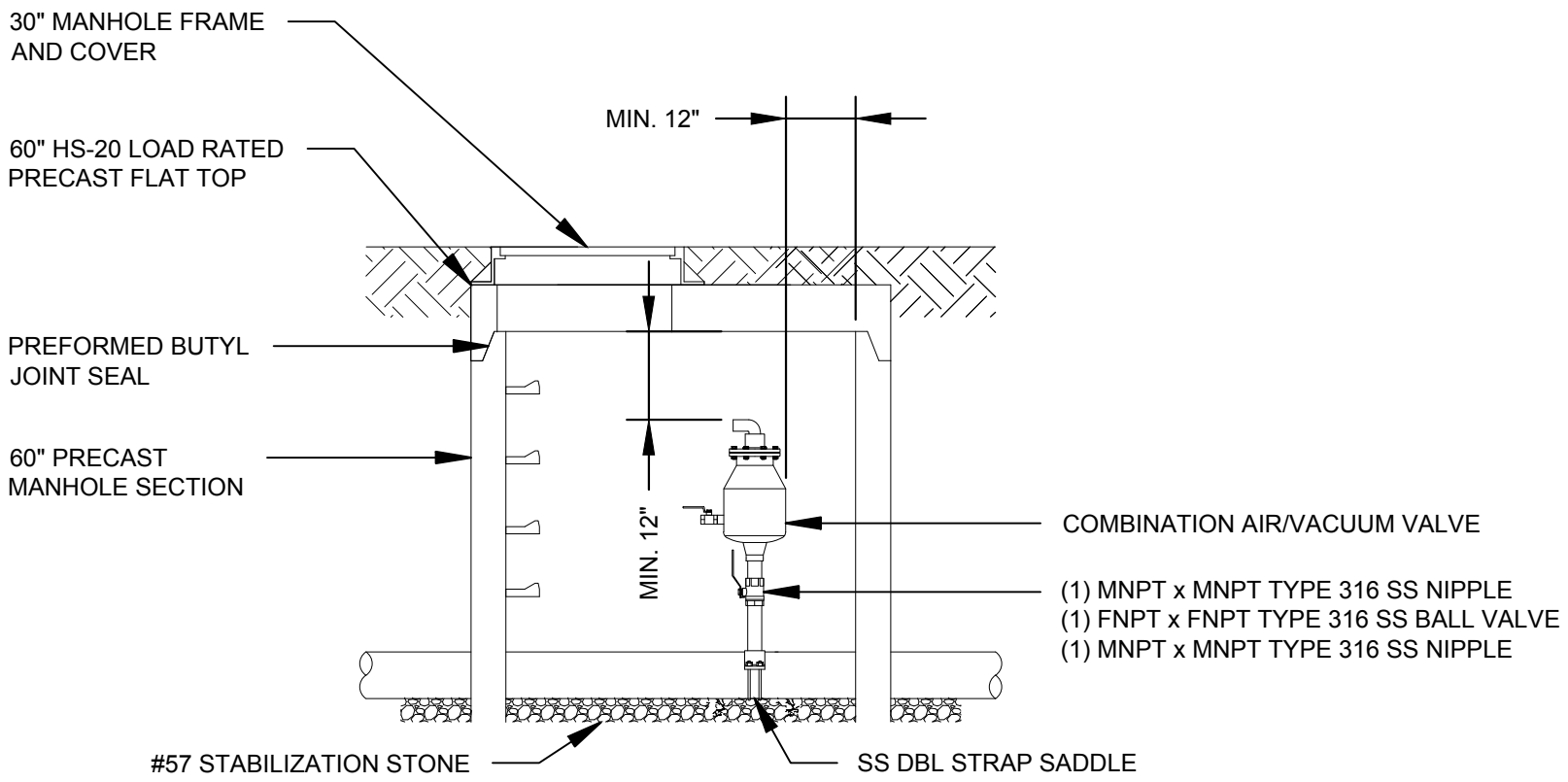

SPALDING COUNTY WATER AUTHORITY

SANITARY SEWAGE
COMBINATION AIR/VACUUM VALVE
(3" AND SMALLER)

SPEC. DATE: 2024

REVISED: N/A

SCALE: N.T.S.

DETAIL NO.

PS28

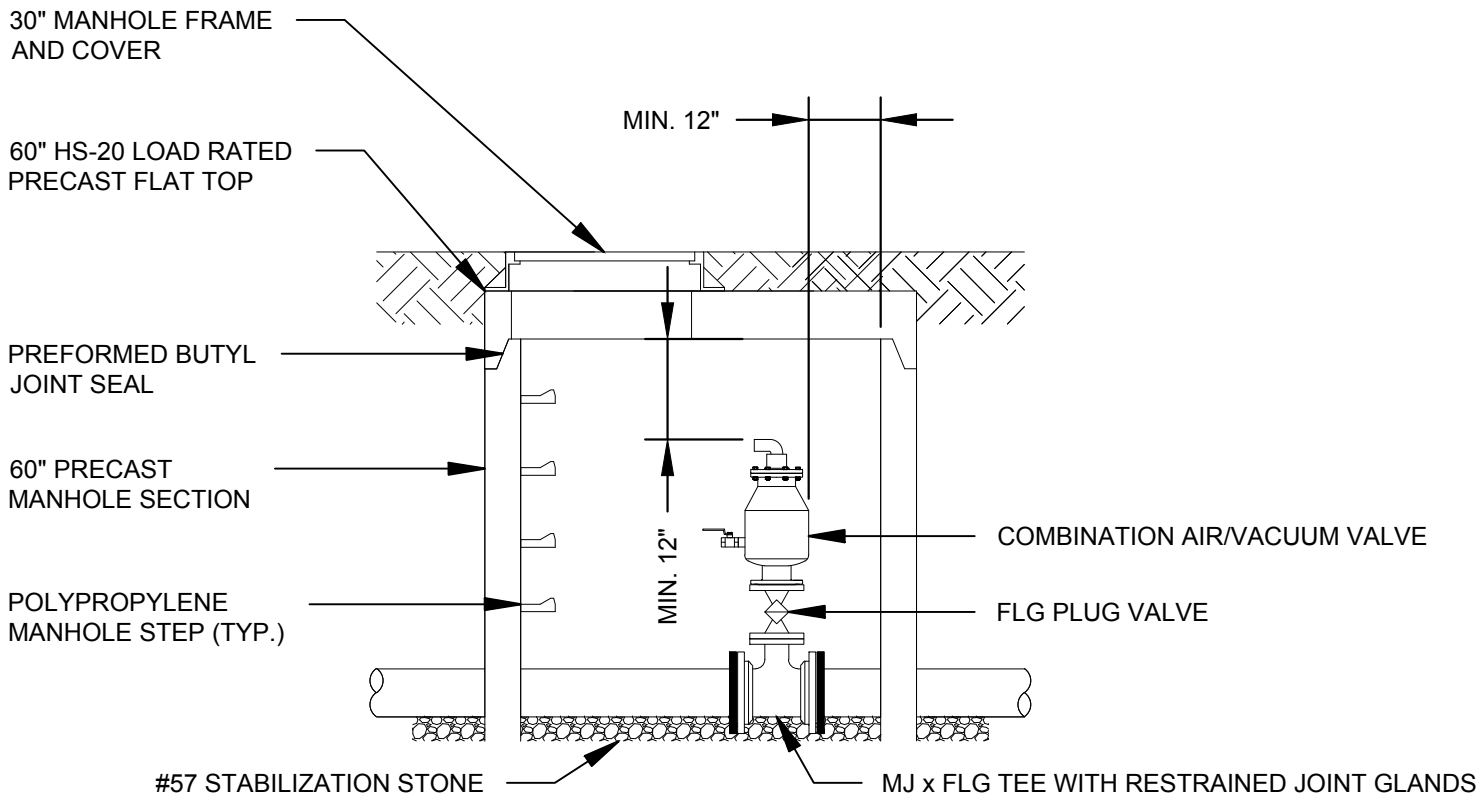

SPALDING COUNTY WATER AUTHORITY

SANITARY SEWAGE COMBINATION AIR/VACUUM VALVE (4" AND LARGER)

SPEC. DATE: 2024

REVISED: N/A

SCALE: N.T.S.

DETAIL NO.

PS29

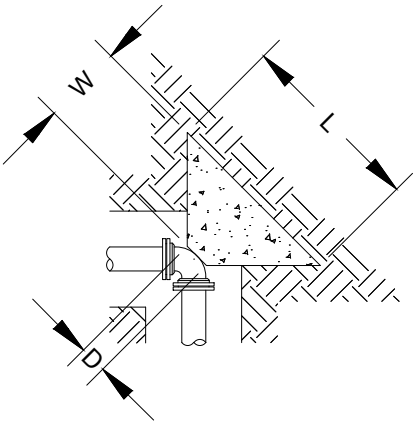

BEND PLAN

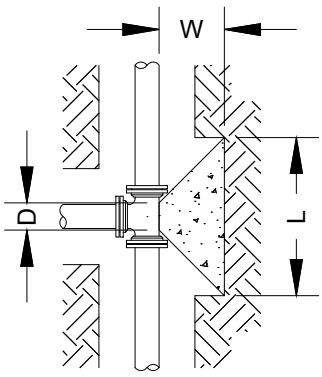

TEE PLAN

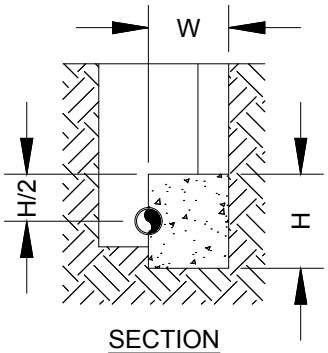

SECTION

TEES						
PIPE DIA. (IN)	D DIM.	L DIM.	H DIM.	W DIM.	CONC. VOLUME (YD^3)	THRUST (LBF)
4	0'-6"	2'-4"	1'-2"	0'-11"	0.06	4,072
6	0'-8"	3'-4"	1'-8"	1'-4"	0.16	8,413
8	0'-9"	4'-5"	2'-3"	1'-10"	0.39	14,473
10	0'-11"	5'-5"	2'-9"	2'-3"	0.73	21,773
12	1'-1"	6'-5"	3'-3"	2'-8"	1.20	30,791
90° BENDS						
PIPE DIA. (IN)	D DIM.	L DIM.	H DIM.	W DIM.	CONC. VOLUME (YD^3)	THRUST (LBF)
4	0'-5"	2'-9"	1'-5"	1'-2"	0.10	5,758
6	0'-8"	4'-0"	2'-0"	1'-8"	0.29	11,898
8	0'-9"	5'-3"	2'-8"	2'-3"	0.67	20,468
10	0'-11"	6'-5"	3'-3"	2'-9"	1.21	30,792
12	1'-1"	8'-7"	3'-10"	3'-3"	2.00	43,545
45° BENDS						
PIPE DIA. (IN)	D DIM.	L DIM.	H DIM.	W DIM.	CONC. VOLUME (YD^3)	THRUST (LBF)
4	0'-4"	2'-0"	1'-0"	0'-10"	0.04	3,116
6	0'-7"	2'-11"	1'-6"	1'-2"	0.11	6,439
8	0'-8"	3'-10"	1'-11"	1'-7"	0.25	11,077
10	0'-11"	4'-9"	2'-5"	1'-11"	0.49	16,664
12	1'-1"	6'-7"	2'-10"	2'-3"	0.79	23,566
22½° BENDS						
PIPE DIA. (IN)	D DIM.	L DIM.	H DIM.	W DIM.	CONC. VOLUME (YD^3)	THRUST (LBF)
4	0'-5"	1'-5"	0'-9"	0'-6"	0.01	1,589
6	0'-7"	2'-1"	1'-1"	0'-9"	0.04	3,283
8	0'-9"	2'-9"	1'-5"	1'-0"	0.09	5,647
10	0'-10"	3'-4"	1'-8"	1'-3"	0.16	8,495
12	1'-0"	4'-0"	2'-0"	1'-6"	0.28	12,014

NOTES:

1. THRUST BLOCK DIMENSIONS ARE BASED ON THE FOLLOWING DESIGN CRITERIA.

   WORKING PRESSURE = 150 PSI
   SOIL BEARING CAPACITY = 1,500 PSF
   SAFETY FACTOR = 1.5

   THESE ARE THE MINIMUM DESIGN CRITERIA. IF ACTUAL WORKING PRESSURE IS GREATER THAN 150 PSI OR IF ACTUAL SOIL BEARING CAPACITY IS LESS THAN 1,500 PSF, DIMENSIONS SHALL BE RECALCULATED.

2. THRUST BLOCK CONCRETE SHALL HAVE A MINIMUM 28 DAY COMPRESSIVE STRENGTH OF 2,500 PSI.
3. THRUST BLOCK SHALL BEAR AGAINST UNDISTURBED SOIL.
4. A MINIMUM 10 MIL PLASTIC SHEET SHALL BE PLACED BETWEEN CONCRETE AND PIPE.
5. ALL BOLTS SHALL REMAIN ACCESSIBLE. DO NOT COVER WITH CONCRETE.

spalding county SCWA water authority

SPALDING COUNTY WATER AUTHORITY

CONCRETE THRUST BLOCK

SPEC. DATE: 2024

REVISED: N/A

SCALE: N.T.S.

DETAIL NO.

PS30

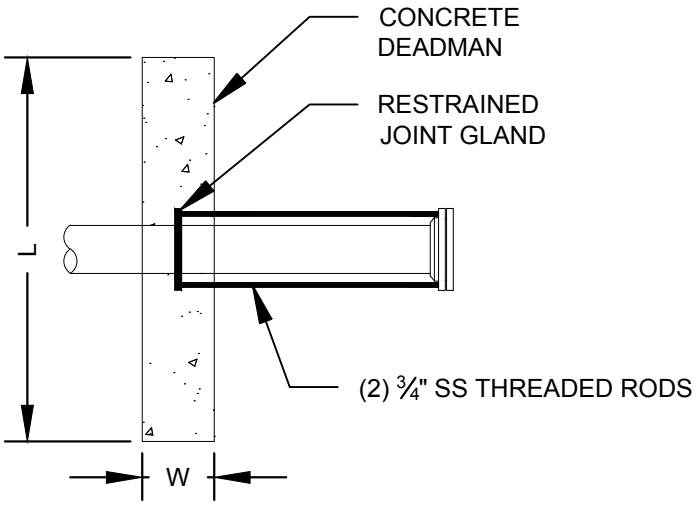

PLAN

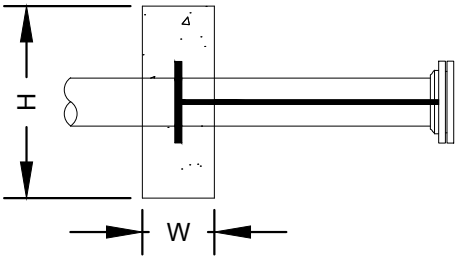

SECTION

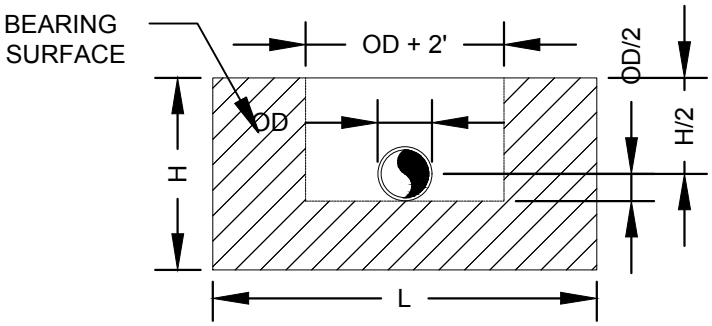

DEADMAN DIMENSION					
PIPE DIA. (IN)	L DIM.	H DIM.	W DIM.	CONC. VOLUME (YD^3)	THRUST (LBF)
4	3'-0"	1'-7"	1'-0"	0.18	4,072
6	4'-3"	2'-1"	1'-0"	0.33	8,413
8	5'-4"	2'-8"	1'-0"	0.53	14,473
10	6'-0"	3'-6"	1'-0"	0.78	21,773
12	7'-1"	4'-0"	1'-0"	1.05	30,791

NOTES:

1. DEADMAN DIMENSIONS ARE BASED ON THE FOLLOWING DESIGN CRITERIA.

   WORKING PRESSURE = 150 PSI
   SOIL BEARING CAPACITY = 1,500 PSF
   SAFETY FACTOR = 1.5

   THESE ARE THE MINIMUM DESIGN CRITERIA. IF ACTUAL WORKING PRESSURE IS GREATER THAN 150 PSI OR IF ACTUAL SOIL BEARING CAPACITY IS LESS THAN 1,500 PSF, DIMENSIONS SHALL BE RECALCULATED.

2. DEADMAN CONCRETE SHALL HAVE A MINIMUM 28 DAY COMPRESSIVE STRENGTH OF 2,500 PSI.
3. DEADMAN SHALL BEAR AGAINST UNDISTURBED SOIL.
4. A MINIMUM 10 MIL PLASTIC SHEET SHALL BE PLACED BETWEEN CONCRETE AND PIPE.
5. ALL BOLTS SHALL REMAIN ACCESSIBLE. DO NOT COVER WITH CONCRETE.

	SPALDING COUNTY WATER AUTHORITY	SPEC. DATE: 2024
spalding county SCWA water authority	CONCRETE DEADMAN	REVISED: N/A
		SCALE: N.T.S.
		DETAIL NO. PS31

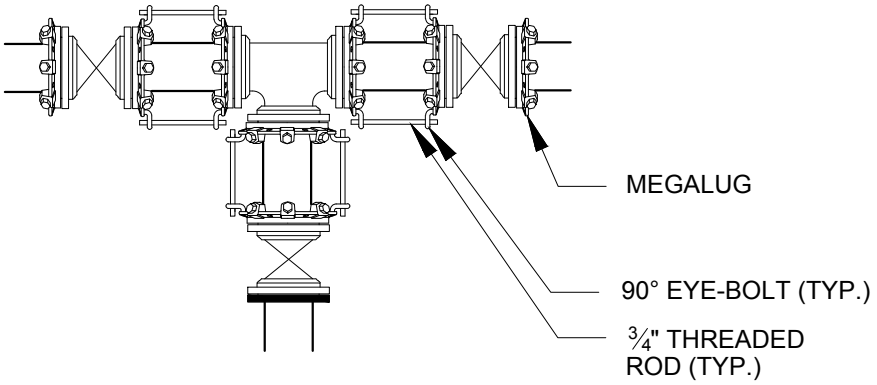

FITTING WITH TIE-RODS AND RESTRAINED JOINT GLANDS

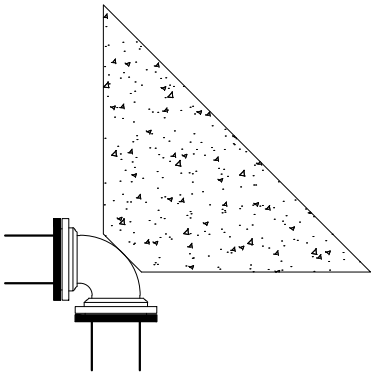

FITTING WITH RESTRAINED JOINT GLAND AND THRUST BLOCK

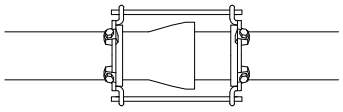

TIE-RODS FROM RESTRAINED JOINT GLAND TO RESTRAINED JOINT GLAND

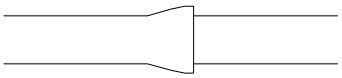

PUSH-ON JOINT WITH RESTRAINED JOINT GASKET

PIPE DIA. (IN)	ROD SIZE (IN)	# OF RODS
6	¾"	2
8	¾"	4
10	¾"	4
12	¾"	4
14	¾"	4
16	¾"	6

TIE-ROD CHART

NOTES:

1. RESTRAINED JOINT LENGTHS SHALL BE CALCULATED BY THE DESIGN ENGINEER. CALCULATIONS SHALL BE SUBMITTED TO SCWA.
2. THREADED ROD SHALL HAVE A MINIMUM YIELD STRENGTH OF 50,000 PSI.

SPALDING COUNTY WATER AUTHORITY

SPEC. DATE: 2024

REVISED: N/A

SCALE: N.T.S.

THRUST RESTRAINT

DETAIL NO.

PS32