2025 JCB 525-60

1,137 Hours

- GALAXY TYRES
- CLOTH SEATS
- Q FIT CARRIAGE
- FRONT WORK LIGHTS
- FRONT SCREEN GUARD
- ROOF WIPER CAB
- KEYPAD IMMOBILSER











USED TELEHANDLER | 2025 JCB 525-60

Our Ref: 0046096 Serial No: 3431997

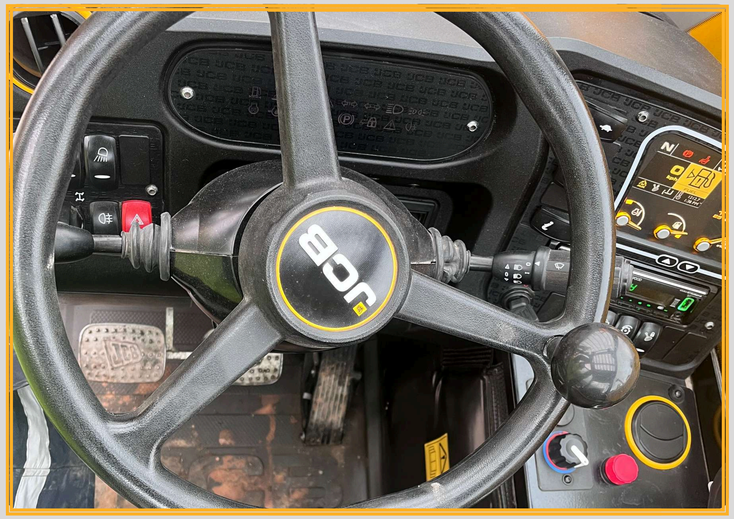





USED TELEHANDLER | 2025 JCB 525-60

Our Ref: 0046096 Serial No: 3431997

STATIC DIMENSIONS

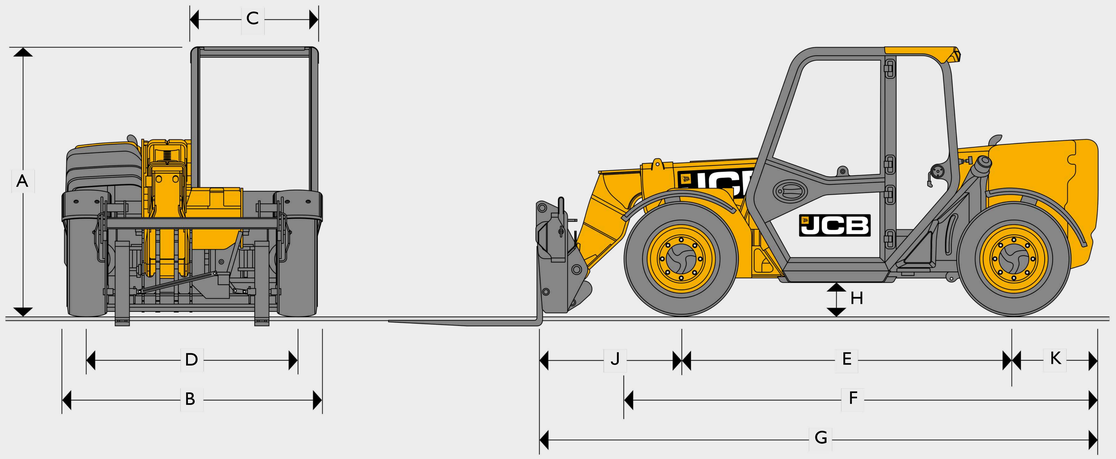

Machine model			525-60 Hi-Viz
A	Overall height*	m	1.89
B	Overall width (over tyres)*	m	1.84
C	Inside width of cab	m	0.88
D	Front track	m	1.53
E	Wheelbase	m	2.39
F	Overall Length to front tyres	m	3.38
G	Overall length to front carriage	m	4
H	Ground clearance	m	0.23
J	Front wheel centre to carriage	m	1.02
K	Rear wheel centre to rear face	m	0.6
	Carriage roll back angle at ground	degrees	11
	Carriage dump angle at max height	degrees	114
	Weight	kg	5490
	Tyres		12x16.5
		industrial	

* Dependant upon tyre specified.

LIFT PERFORMANCE

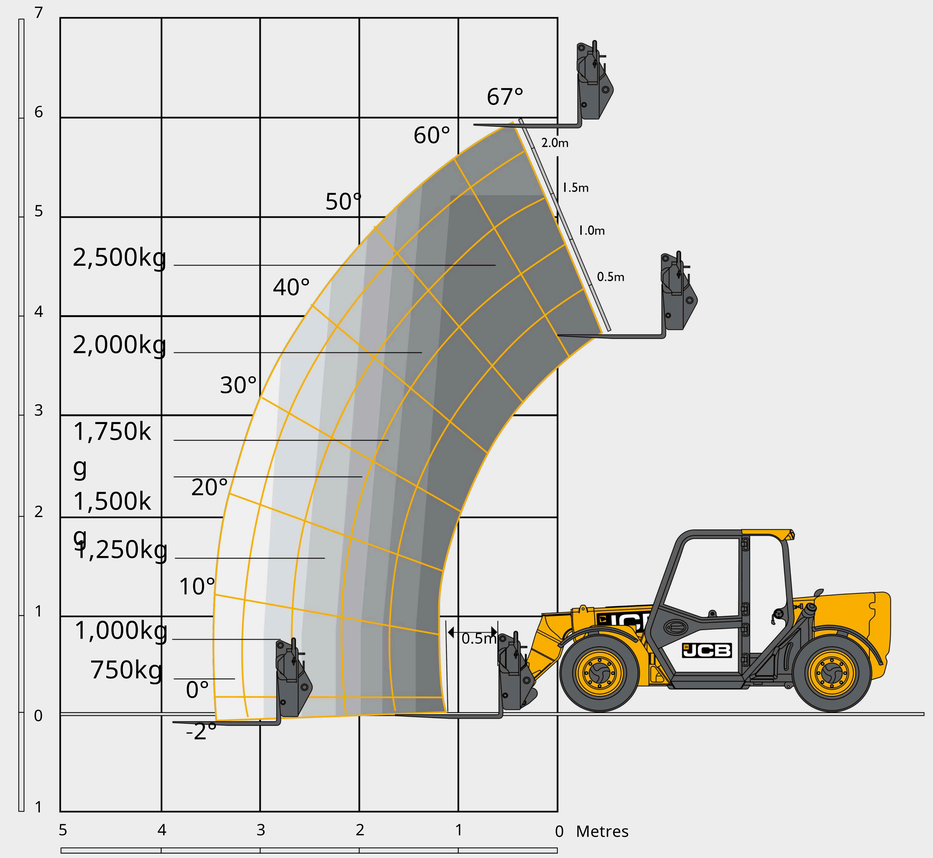

Machine model		525-60 Hi-Viz
Maximum lift capacity	kg	2500
Lift capacity to full height	kg	2000
Lift capacity at full reach	kg	800
Maximum lift height	mm	6000
Reach at max. lift height	mm	-150
Maximum forward reach	mm	3060
Reach with 1 tonne payload	mm	3000

Complies with stability test EN 1459 Annex B.

ENGINE		514-40	516-40	520-40	525-60 Hi-Viz
Engine model		Perkins 403J-11	Perkins 403J-17	Perkins 403J-17	JCB Diesel by Kohler
Power	kW	18.4	18.4	18.4	55
Torque	Nm	66.9Nm @ 1400rpm	98Nm @ 1400rpm	98Nm @ 1400rpm	300Nm @1500rpm
Displacement	litres	1.1	1.7	1.7	2.5
Number of cylinders		3	3	3	4

TRANSMISSION		514-40	516-40	520-40	525-60 Hi-Viz
Type		Hydrostatic			
Modes		2 Speed			
Drive		Permanent 4 Wheel Drive			
Maximum speed	kph	15	15	15	25

ELECTRICAL SYSTEM		514-40	516-40	520-40	525-60 Hi-Viz
System voltage	Volt	12	12	12	12
Alternator output	Amp hour	62	85	85	100
Battery capacity	Amp hour	65	80	80	120

HYDRAULICS		514-40	516-40	520-40	525-60 Hi-Viz
Maximum system pressure	bar	230	230	230	260
Flow rate	ltr/min	23	40	40	80
Joystick control		Twin lever	Single lever	Twin lever	Single lever Servo
Steer modes		Permanent 4 Wheel Steer			3 modes
Cycle times					
Boom Raise	seconds	7	8.9	8.9	7.6
Boom Lower	seconds	5	4.9	5.9	5.3
Extend	seconds	8.6	6.6	4.7	7.5
Retract	seconds	4.3	3.7	4.7	3.7
Bucket Dump	seconds	2.7	4.2	4.8	1.9
Bucket Crowd	seconds	3.7	3	4	2.9

SERVICE CAPACITIES		514-40	516-40	520-40	525-60 Hi-Viz
Fuel tank	litres	27	50	61	65
Hydraulic tank	litres	25	58	33	75

BRAKES	514-40	516-40	520-40	525-60 Hi-Viz
Service brakes	Hydraulically operated self-adjusting			
Parking brake	Cable manually operated drum brake			SAHR Handbrake self adjusting

OPTIONS	514-40	516-40	520-40	525-60 Hi-Viz
CAB				
ROPS ISO3471	•	•	•	•
FOPS ISO 3449	•	•	•	•
Hourmeter	•	•	•	•
Adjustable fabric seat	•	•	•	•
Digital dash display	•	•	•	•
LiveLink telematics	•	•	•	•
Load control system (LMI)	•	•	•	•
ACCESSORIES				
Reversing alarm	•	•	•	•
50mm towing ball with 7 pin trailer electrics	•	-	-	-
Halogen work lights	-	+	+	+
LED work lights	+	-	-	+
Amber beacon	+	+	+	+
Green beacon with orange seat belt	+	-	+	+
Competitor carriages	+	+	+	+
Window guards	-	+	+	+
Sun blind	+	+	+	+
Immobiliser	+	+	+	+
Air conditioning	-	-	-	+
FM radio kit	+	+	+	+

STANDARD •

OPTIONAL +

NOT APPLICABLE -