2021 JCB 4CX PRO

4,533 Hours

- 14 EXT DIPPER STAGE V ENGINE AEC HEAVY LIFT
- CAB WITH AIR CONDITION
- CLOTH AIR SUSPENSION SEAT
- KEY IMMOBILISER
- TERRITORY PACK
- HYDRAULIC QUICK HITCH
- LIFTING SENSOR KIT
- DIRECT MOUNT 6 IN 1 WITH FORKS & TEETH
- STABILISER STREET PADS











USED BACKHOE LOADER | 2021 JCB 4CX PRO

Our Ref: 0044927 Serial No: 3002458













USED BACKHOE LOADER | 2021 JCB 4CX

Our Ref: 0044927 Serial No: 3002458

STATIC DIMENSIONS

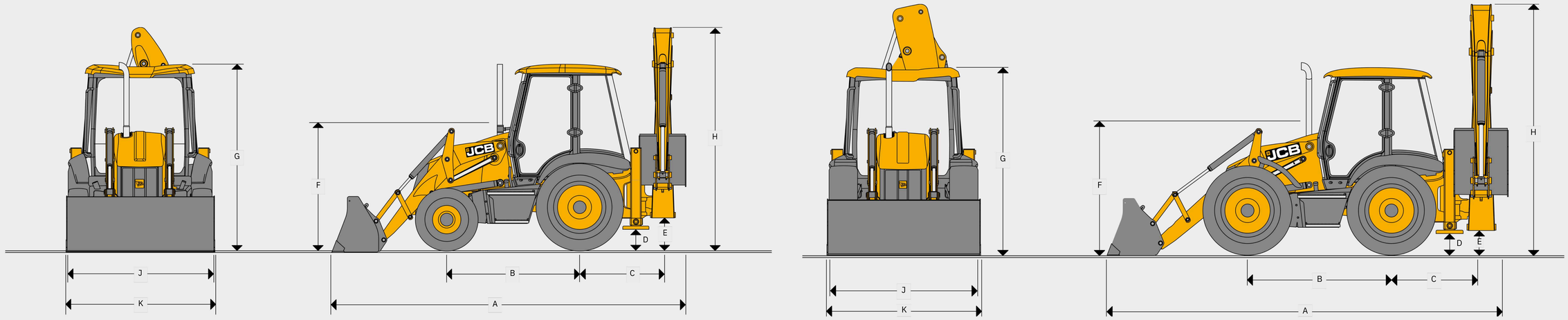

Dimensions in m		3CX		3CX PLUS		3CX PRO		4CX PLUS	4CX PRO	5CX PRO
A	Total travel length	5.62		5.62		5.62		5.91	5.91	5.91
B	Axle centreline distance	2.17		2.17		2.17		2.22	2.22	2.22
C	Slew centre to rear axle centre distance	1.36		1.36		1.36		1.36	1.36	1.36
D	Stabiliser feet clearance	0.37		0.37		0.37		0.33	0.34	0.34
E	Kingpost clearance	0.52		0.52		0.52		0.48	0.50	0.50
F	Steering wheel centre height	1.94		1.94		1.94		1.86	1.88	1.88
G	Cab roof height	3.03		3.03		3.03		2.98	3.03	3.03
H	Total travel clearance	3.61		3.61		3.61		3.48	3.62	3.97
J	Rear frame width	2.35	2.24*	2.35	2.24*	2.35	2.24*	2.36	2.36	2.36
K	Shovel width	2.35	2.23*	2.35	2.23*	2.35	2.23*	2.33	2.33	2.33
K	Shovel width - option	-	-	-	-	-	-	-	2.44	2.44

* Narrow option

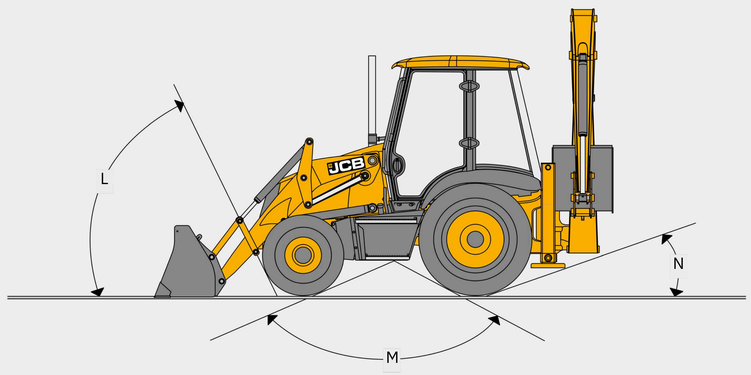

GROUND LINE ANGLES

Machine model			3CX, 3CX PLUS, 3CX PRO	4CX PRO, 5CX PRO
L	Approach angle	degrees	66°	74°
M	Interference angle/ramp to ground plane	degrees	120°	118°
N	Departure angle	degrees	20°	19°

ENGINE

Model		3CX	4CX PLUS*	3CX PLUS 3CX PRO	4CX PRO 5CX PRO
Engine standard		Stage V	Stage V	Stage V	Stage V
Manufacturer		JCB	JCB	JCB	JCB
Aspiration		Turbocharged & Intercooled	Turbocharged & Intercooled	Turbocharged & Intercooled	Turbocharged & Intercooled
Displacement	litre	3.0	4.8	4.8	4.8
No. of cylinders		4	4	4	4
Bore	mm	92	106	106	106
Stroke	mm	112	112	112	112
Rated engine	rpm	2200	2200	2200	2200
Power ratings					
Rated ISO 14396 (SAE J1995 Gross)					
Maximum torque					
Max. torque rpm	kW	55	72	81	81
Max. torque rpm					
* Model not available in all regions					
	Nm	440	450	516	516
	rpm	1200	1450	1450	1450

ELECTRICAL AND INSTRUMENTATION

Camera system (optional)	Quick hitch mounted and cab roof camera with 7" colour screen
7" colour display screen	Audio and phone, controls, engine coolant temperature, fuel level, machine hours, help files, service alerts, clock
Front display	Speedometer, warning alerts, engine oil, water in fuel, transmission oil temperature and pressure, park brake, air cleaner, alternator
Battery	1000 CCA (120 amp)
Horn	Controlled from both front and rear
Alternator	105 amp (55kW) 170 amp (72kW/81kW)
Front working lights	4 x 1000 lumen LED adjustable lights (standard) / 4 x 2000 lumen LED adjustable lights (option)
Rear working lights	4 x 1000 lumen LED adjustable lights (standard) / 6 x 2000 lumen LED adjustable lights (option)
Green beacon (optional UK only)	Wiring, magnetic mount and 1 roof mounted green beacon light

ENGINE SUPPORT SYSTEM

Fuel type	Diesel
Fuel filter	Replaceable cartridge plus water/sediment separator prefilter
Air cleaner	Dual, dry element type, with self cleaning internal air intake precleaner
Oil filter and lubrication	Full flow, spin-on type filter
Cooling system	Hot climate specification, pressurised 1.0 bar suction fan. Pressurised recovery tank with integral filler neck

TRANSMISSION

Model		3CX 55kW	3CX PLUS 81kW	3CX PRO 81kW	4CX PLUS 72kW	4CX PRO, 5CX PRO
Manufacturer		JCB	JCB	JCB	JCB	JCB
Type		Autoshift	Autoshift	Autoshift**	Autoshift	Autoshift
TorqueLock		Standard	Standard	Standard	Standard	Standard
Gear 1	kph	5.2	5.2	4.9	4.9	4.9
Gear 2	kph	9.5	9.5	8.9	8.9	8.9
Gear 3	kph	13.5	13.5	12.6	12.6	12.6
Gear 4	kph	19.4	19.4	18.2	18.2	18.2
Gear 5	kph	35	35	33	33	33
Gear 6	kph	40	40	47	42	42

** Engine Speed at 2200rpm on 400/70-20 Front Tyres and 480/80-R26 Rear Tyres.

OPERATING WEIGHTS

Machine model		3CX	3CX PLUS	3CX PRO	4CX PLUS	4CX PRO	5CX PRO
Fixed dipper	kg	7887	-	-	8178	-	9034
Extended dipper	kg	8320	8600	8600	9350	9350	9500

Operating weight to ISO 6016 includes machine with 6-in-1 shovel, 600mm excavator bucket and a full fuel tank and operator. Actual weight will vary depending on machine options.

FRONT AXLE

Model	3CX, 3CX PLUS, 3CX PRO	4CX PLUS, 4CX PRO, 5CX PRO
Type	JCB steer drive with torque proportional	JCB epicyclic hub reduction with torque proportional
Limited slip	-	Option
Axle ratings	kg	kg
Static load rating	16500	25000
Dynamic load rating	8300	12500
Oscillation angle	16°	16°

REAR AXLE

Model	3CX, 3CX PLUS, 3CX PRO	4CX PLUS, 4CX PRO, 5CX PRO
Type	JCB epicyclic hub reduction with torque proportional	JCB epicyclic hub reduction with torque proportional
Limited slip	Option	Option
Axle ratings	kg	kg
Static load rating	25000	25000
Dynamic load rating	12500	12500

STEERING

Model	3CX, 3CX PLUS, 3CX PRO	4CX PLUS	4CX PRO, 5CX PRO
Axles	Steer drive	Steer drive	Steer drive
Steering turns - lock to lock	2¾	2¾	2¾
	m	m	m
Kerb – kerb turning circle - unbraked	8.1	9.35	9.1
Loader clearance circle - unbraked	10.4	11.15	10.7
Kerb – kerb turning circle - braked	6.9	8.0	8.0
Loader clearance circle - braked	9.5	9.5	9.5

(Depending on tyre size, ground conditions etc.)

STEERING

Model	3CX, 3CX PLUS, 3CX PRO	4CX PLUS	4CX PRO, 5CX PRO
2WS	√	√	√
AWS	-	√	√
Crab steer		-	√

SERVICE CAPACITIES

Model		3CX, 3CX PLUS, 3CX PRO	4CX PLUS, 4CX PRO, 5CX PRO
Cooling system	ltr	18.5	18.5
Fuel tank	ltr	130	130
Engine oil with filter	ltr	15	15
Gearbox with filter	ltr	16	16
Rear axle	ltr	16	16
Front drive axle	ltr	16	16
Hydraulic system incl. tank	ltr	117	117

HYDRAULIC SYSTEM

Piston pump flow @ 2200rpm	l/min	165
System relief pressure	bar	251
Loader auxiliary flow	l/min	140

Smooth Ride System SRS standard.

OPTIONAL ACCESSORIES

Tyres - Michelin/Goodyear/JCB Sitemaster brand of tyres with a selection of traction/industrial tread in a crossply/radial construction. 18" and 20" tyre options are available

Hydraulics - Hammer pipework, Bi-directional pipework, Hand-held tool circuit, 9m hose reel, Excavator lifting kits for EN474 and non-EN474.

Machine features - JCB Power Slide, Grid heaters, Black and yellow trim kits, Integrated quick hitch with forks.

Machine and site protection - Fuel tank guards, Stabiliser street pads, Lubricity filter, Biodegradable oil.

Attachments - Standard excavator buckets (300mm to 900mm), Deep profile excavator bucket (300mm to 940mm), Ditching buckets (1542mm to 1828.8mm), General purpose 6-in-1 front shovel (1m³ to 1.3m³), Manual/hydraulic front quickhitch, Manual/hydraulic rear quickhitch, Hand-held tool circuit, Laser mount pole,

Safety and security - Reverse alarm.

CAB CONFIGURATION

Seat and comfort		Miscellaneous	
Mechanical suspension seat	l	Roof mounted camera	l
Air suspension seat (standard on joystick controls)	l	Quick hitch camera	l
Seat head rest	l	Exterior mirrors	l
Arm rest	l	Interior rear view mirror	l
Seat belt	l	Front windscreen heater	l
Heater	l	10 LED working lights (2000 lumens each)	l
Air conditioning (3CX PRO, 4CX PRO, 5CX PRO)	l	Reverse alarm	l
Air conditioning (3CX, 3CX PLUS, 4CX PLUS)	l	LED roof beacons	l
Doors and windows		**Controls**	
Tinted glass	l	FNR switch	l
Front windscreen wiper	l	Return to grade	l
Rear windscreen wiper	l	Return to dig	l
Rear one piece opening window	l	ISO/SAE changeover (Joystick controls)	l
Door ajar stays	l	**Security**	
Steering column		Instrumental panel vandal guard	l
Tilted steering column	l	Fire extinguisher	l
Steering wheel knob	l	Immobiliser (standard in UK and on 3CX PLUS, 4CX PLUS)	l
Automatic cab interior light	l	Livelink (region specific)	l
Storage		Rear light guards	l
Side storage & roof storage (lockable)	l	Front bumper protection	l
Radio		End boom damping	l
(Bluetooth, USB aux, SD) & speakers, integrated hands free phone system	l	Dualdrive* (Pro models)	l
	l	l Standard l Option	

*Regional dependant

NOISE AND VIBRATION LEVELS

Internal dB(A)	74dB(A) - (55) 75dB(A) - (81kW engine)
External dB(A)	102
Vibration	Hand arm vibration 2.5m/s² - Whole body vibration 0.5m/s²

LOADER DIMENSIONS

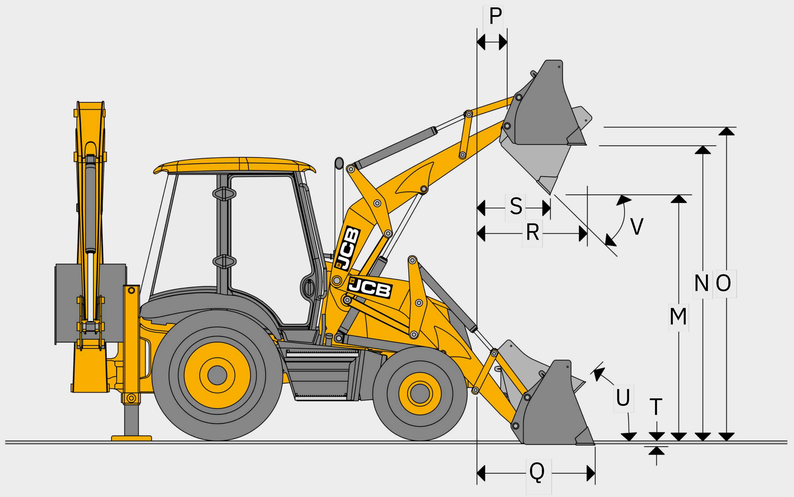

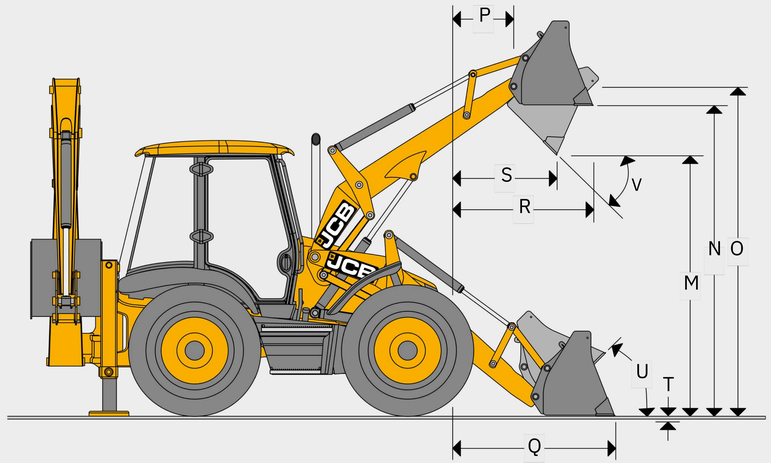

Model			3CX, 3CX PLUS, 3CX PRO		4CX PLUS	4CX PRO, 5CX PRO
			GP shovel	6-in-1 shovel	6-in-1 shovel	6-in-1 shovel
M	Dump height	m	2.74	2.72	2.64	2.69
N	Load over height	m	3.23	3.20	3.13	3.18
O	Loader hinge pin height	m	3.45	3.45	3.41	3.46
P	Pin forward reach	m	0.36	0.36	0.47	0.41
Q	Reach at ground (toe plate horizontal)	m	1.42	1.37	1.50	1.39
R	Max. reach at full height	m	1.20	1.15	1.22	1.17
S	Reach at full height fully dumped	m	0.83	0.78	0.82	0.76
T	Dig depth	m	0.07	0.10	0.23	0.18
U	Roll back at ground	degrees	45°	45°	45°	45°
V	Dump angle	degrees	43°	43°	44°	45°
	Jaw opening width	m	-	0.95	0.95	0.95

LOADER PERFORMANCE

Model	3CX, 3CX PLUS, 3CX PRO		3CX PRO	4CX PLUS, 4CX PRO, 5CX PRO
	GP shovel	6-in-1 shovel	6-in-1 shovel	6-in-1 shovel
Loader breakout – shovelkgf Loader breakout – armskgf Rated operating	6170	6531	6531	6590
capacity 7'4"*kgf Rated operating capacity 7'8"*kgf Rated operating	4942	4732	6203	5730
capacitykg Clamping forcekgf *Rated operating capacity as determined	3479	3229	3229	4378
according to ISO 14397: 2007	3439	3169	3169	–
	–	–	–	–
	–	2940	2940	2945

LOADER ATTACHMENTS – Forklift Performance Data

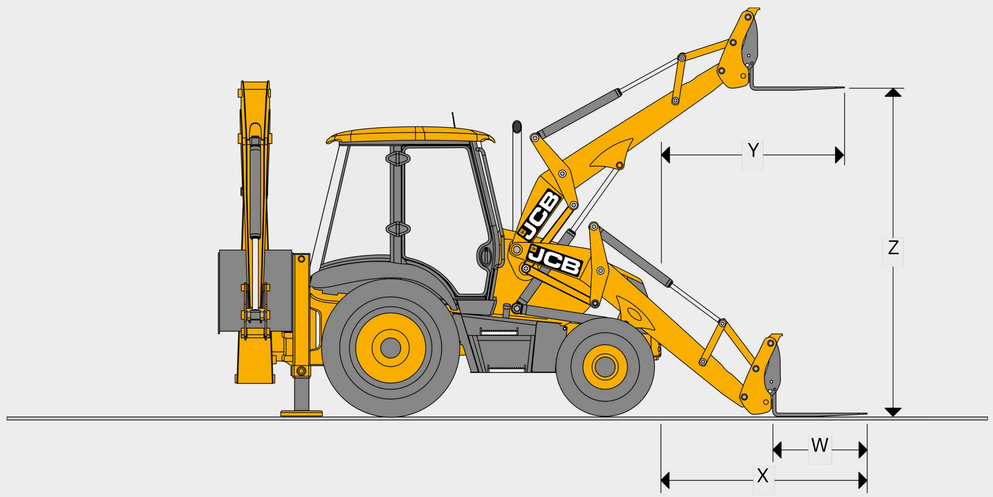

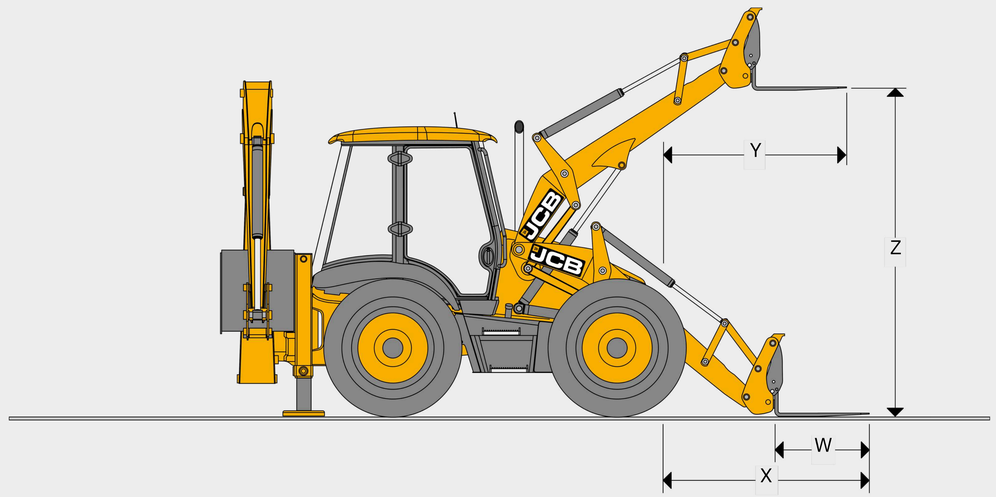

Model			3CX, 3CX PLUS, 3CX PRO		4CX PLUS		4CX PRO*		5CX PRO*	
			6-in-1 shovel mounted forks	Quickhitch mounted forks	6-in-1 shovel mounted forks	Quickhitch mounted forks	6-in-1 shovel mounted forks	Quickhitch mounted forks	6-in-1 shovel mounted forks	Quickhitch mounted forks
W	Forks – tine length	m	1.10	1.10	1.10	1.10	1.10	1.10	1.10	1.10
	Forks – tine width	m	0.08	0.08	0.08	0.08	0.08	0.08	0.08	0.08
X	Forks reach at ground level	m	2.66	1.95	2.78	2.10	2.68	2.13	2.68	2.13
Y	Forks reach at full height	m	2.25	1.73	2.38	1.86	2.30	1.76	2.30	1.76
Z	Forks lift height – max	m	2.92	3.25	2.85	3.23	2.90	3.28	2.90	3.28
	Fork spacing – min	m	0.20	0.38	0.20	0.38	0.20	0.38	0.20	0.38
	Fork spacing – max	m	2.17	1.36	2.17	1.36	2.17	1.36	2.17	1.36
	SWL @ 500mm load centres	kg	1000	2000	1000	2000	1000	2000	1000	2000

*Dimensions dependent on tyre options.

LOADER ATTACHMENTS – Direct Mount

	Capacity SAE			
	G.P. Shovel		6 in 1	
Width mm (ft-in)	Rated m³	Struck	Rated m³	Struck
2235 (7-4)	1.0	0.83	1.0	0.76
2350 (7-8)	1.1	0.91	1.2	1.02
2350 (7-8) 4CX PLUS	1.3	1.19	1.2	1.02
2440 (8-0) 4CX PRO, 5CX PRO	-	-	1.3	1.19