MO-24-96X2-3D 192W

Summary

MO-24-96X2-3D 192W is a constant voltage mode output LED driver. The driver supports leading edge (Triac) and trailing edge (ELV) dimmer, 0-10V to achieve a smooth dimming effect.

Product Features

· 2 channel constant voltage output, Output Current 4A per channel
· Wide input voltage of 120VAC ~ 277VAC
· Dimming effect smooth, Flicker free
· 100% output when no dimming signal input, can be used as normal power supply
· Protection: Over load; short circuit; Over Current

c UL us LISTED E490914

Class 2

5 Yrs warranty

Technical Paramaters

Model	MO-24-96X2-3D 192W	
Input	Efficiency	≥90%@120VAC, full load
	Voltage	120VAC-277VAC
	Frequency Range(Hz)	50/60Hz
	AC Current(max)	1.9Amax@120VAC 1.0Amax @230VAC 0.8Amax @277VAC
	PF	≥0.95@120VAC, ≥0.95@277VAC, full load
	THD	<10%@120VAC, <15%@277VAC, full load
	Inrush Current(max)	Cold start, 40A@120VAC 500us, 80A@277VAC 200us
	Standby power	<5W@120VAC
	No load power	<5W@120VAC
	Turn on delay Time	<0.75s, @120Vac (When the light begins to shine)
Output	Current	2 Channel, 4A per channel
	Voltage	24VDC
	Voltage Range	24VDC ±5%
	Power	96W per channel, total 192W
	Channel	2
	Power limit	120%
	Ripple	≤300mV
	PWM Frequency	20K Hz
Function	Dimming Type	0-10V, TRIAC/ELV(@120VAC 60Hz)
	Dimming Range	0.1%-100%(0-10V) 1%-100%(TRIAC/ELV)
	Dimming curve	(Logarithm)
	Flicker	Flicker free
Protection	Short Circuit	Turn off all channel output burp protection, self-recovery after troubleshooting
	Over Load	Turn off the output of overload channel, self-recovery after troubleshooting
	Over Current	Disable output burp protection, self-recovery after troubleshooting
Safety&EMC	Surge	L-N 2000VAC L-N-PG 4000VAC
	Withstand Voltage	I/P-O/P: 3750Vac/1min/<5mA I/P-PG:1500Vac/1min/<5mA O/P-PG:500Vac/1min/<5mA O/P-DIM(Signal port):1500Vac/1min/<5mA
	Safety standards	UL8750 UL1310 CSA25013.CSA Class 2
	EMC Eission	FCC PART15B
	EMC Immunity	IEC 61000-4-2-3-4-5-6-8-11
	Insulation Resisance	5MΩ
Others	Working Temp.	(-20~+60) °C [-4°F~140°F]
	Storage Temp., Humidity	(-40~+90)°C [-40°F~194°F]
	tc	90°C [194°F]
	Material	Metal
	IP Rating	IP65
	Lifetime	50,000h@tc:80°C [176°F]
	Warranty Condition	5 years
	Switch Cycle	25,000 times
	Packing(weight)	TBD
	Dimension	260*132*52mm (10.24*5.2*2.1 Inch) (L*W*H)

Dimension(mm)

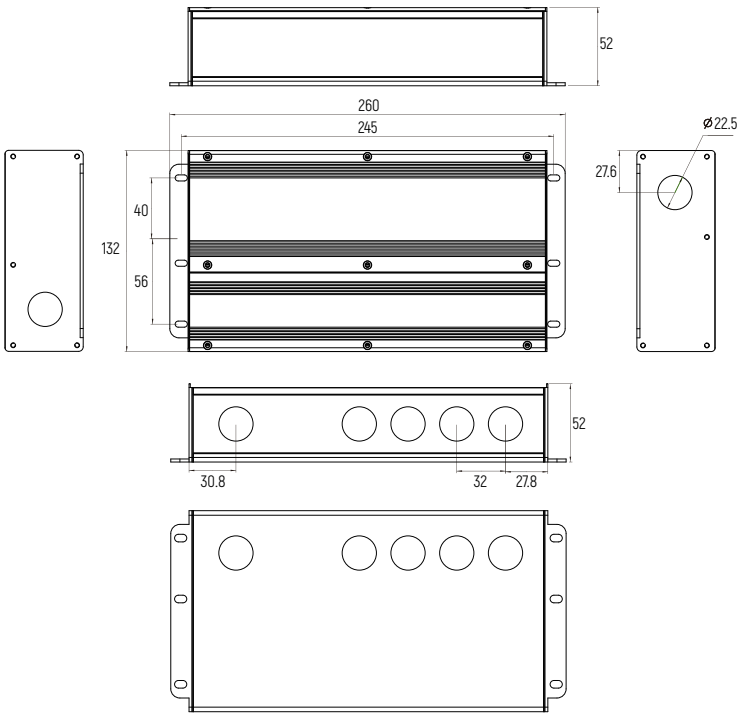

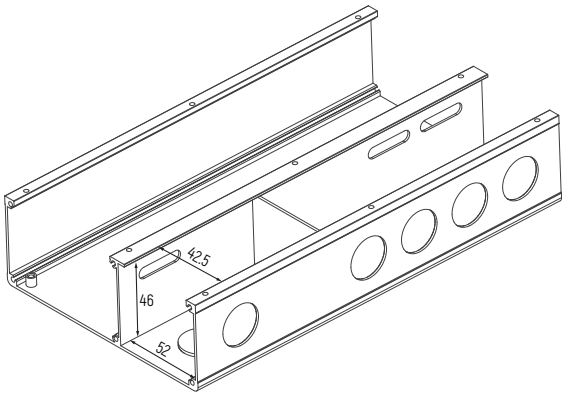

Wiring

Step 1

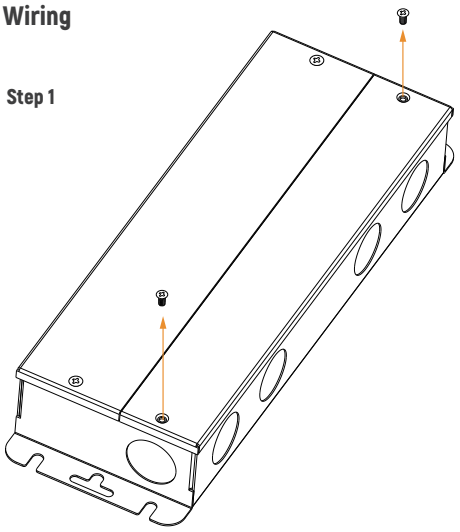

Step 2

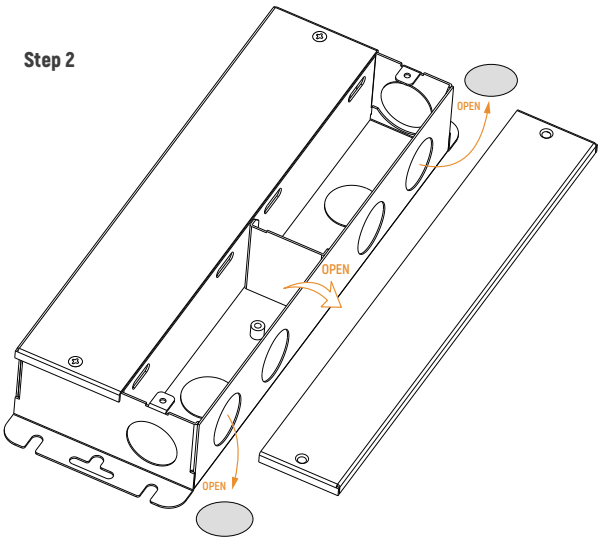

Step 3 UsingTriac MLV wiring diagram

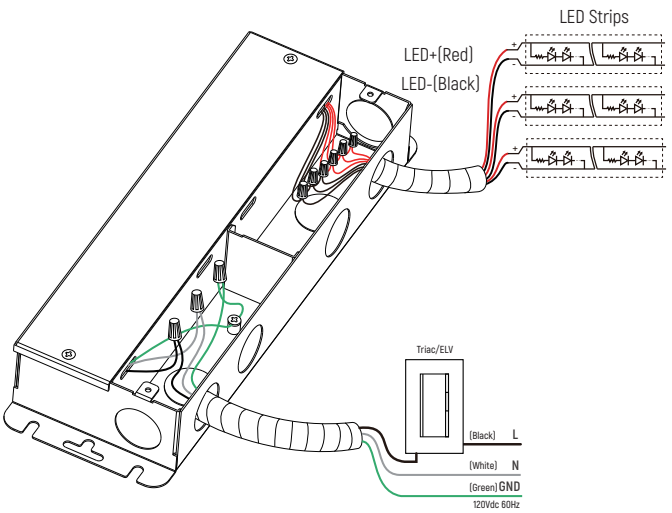

Step 4 UsingTriac ELV wiring diagram

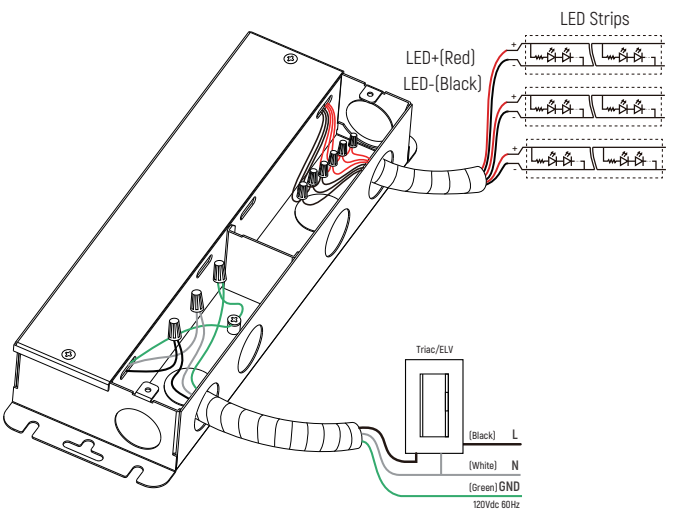

Step 5 0-10V wiring diagram

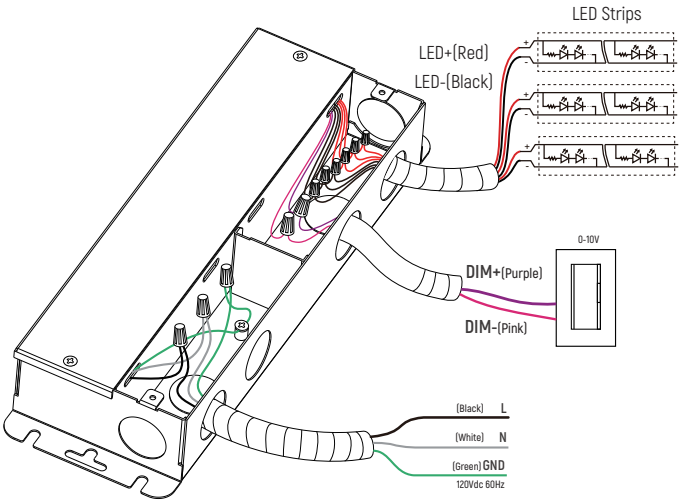

Step 6

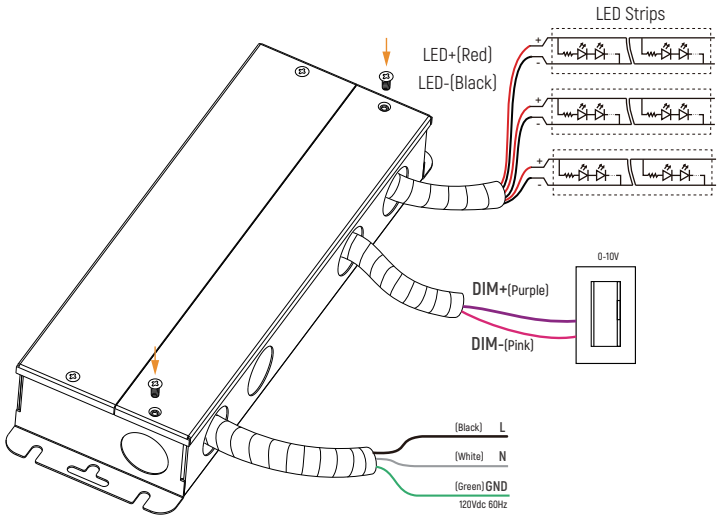

Max. quantity of drivers per miniature circuit breaker

Specification item	Value	Value	Condition
Inrush current I_{peak}	40A (120V)	80A (277V)	Input Voltage120V/277V
Inrush current T_{width}	500us (120V)	200us (277V)	Input Voltage120V/277V, measured ta 50% I_{peak}

MCB	Input Voltage 120V Drivers	Input Voltage 277V Drivers	MCB	Input Voltage 120V Drivers	Input Voltage 277V Drivers
B10	3pcs	5pcs	C10	5pcs	8pcs
B13	4pcs	6pcs	C13	6pcs	11pcs
B16	6pcs	8pcs	C16	8pcs	13pcs
B20	7pcs	10pcs	C20	10pcs	17pcs
			D16	8pcs	27pcs

Installation Precautions

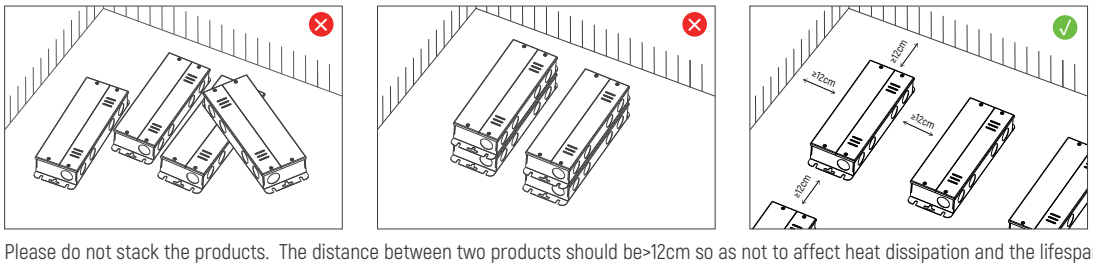

Please do not stack the products. The distance between two products should be>12cm so as not to affect heat dissipation and the lifespan of the products.

0-10V Dimming Curve

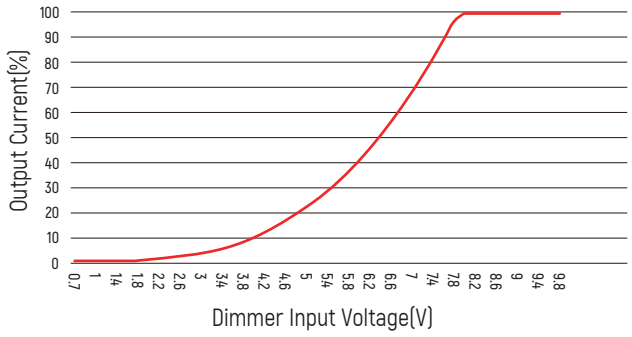

Trailing edge (ELV) Dimming Curve

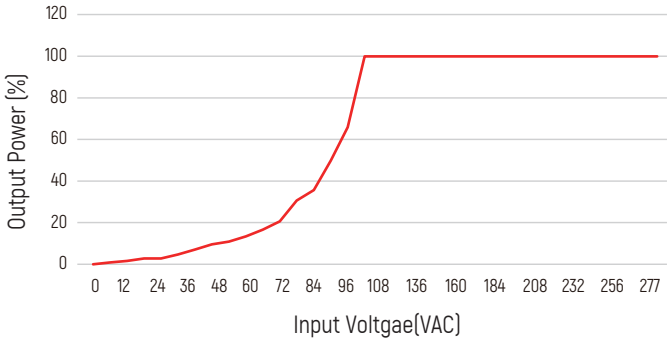

THD vs Load

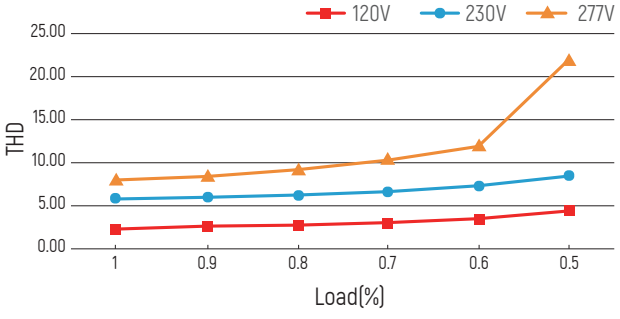

PF vs Load

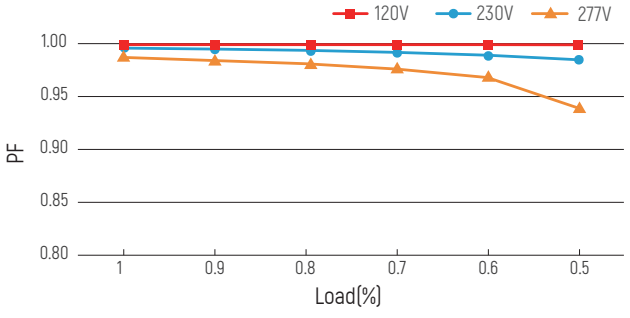

Efficiency vs Load%

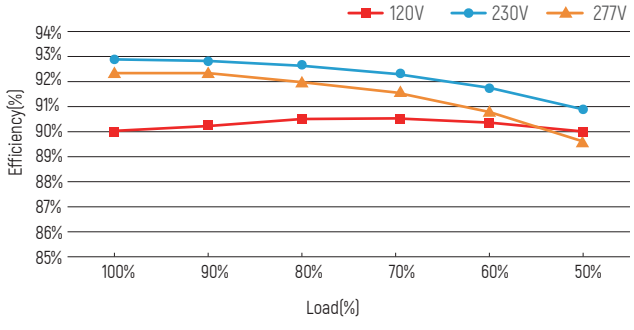

Derating Curve

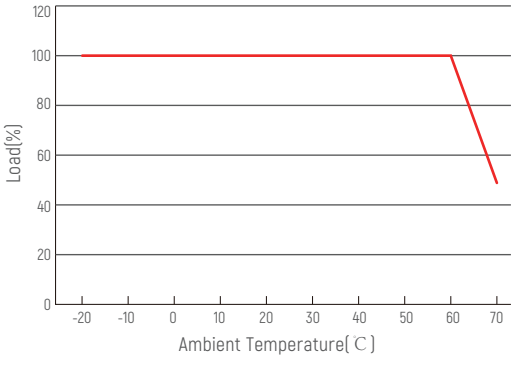

Life-time vs. case temperature

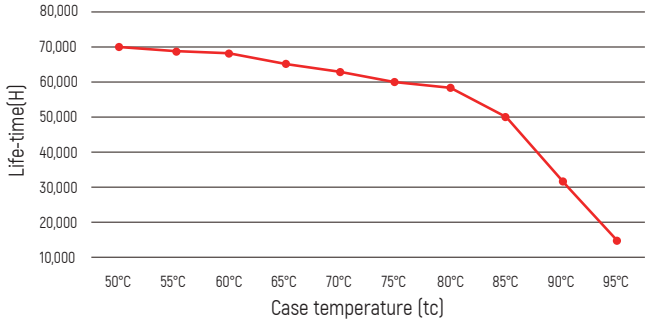

The life-time of the led driver is shown in the figure above
(calculated based on the 90% survival rate).
The relation of tc ta temperature depends also on the luminaire design.

Cautions

1. This product should be installed by qualified personnel.
2. This product is non waterproof, need to avoid sun and rain.In case of outdoor use, please ensure it is mounted in a water proof enclosure.
3. Good heat dissipation conditions extend product life. Please install the product in a well-ventilated environment.
4. Please make sure LED power supply output voltage, current is used to meet the product requirements.
5. Please ensure that adequate sized cable is used from the controller to the LED lights to carry the current. Please also ensure that the cable is secured tightly in the connector.
6. Due to safety concerns, PVC or rubber cord of 0.75- 2.5mm² is recommended for input and output terminal(s)(excluding signal terminals). Flat power cord is not suitable.Ensure all wire connections and polarities are correct before applying power to avoid any damages to the LED lights.
7. In case of malfunction, do not repair it yourself.

※ The contents of this manual are updated without prior notice. If the function of the product you are using is inconsistent with the instructions, the function of the product shall prevail.Please contact us if you have any questions .

Warranty Agreement

1. Warranty periods from the date of delivery : 5 years.
2. Free repair or replacement services for quality problems are provided within warranty periods.

Warranty exclusions below:

1. Beyond warranty periods.
2. Any artificial damage caused by high voltage, overload, or improper operations
3. Products with severe physical damage.
4. Damage caused by natural disasters and force majeure.
5. Warranty labels and barcodes have been damaged.
6. No any contract signed by EUCHIPS.

· Repair or replacement provided is the only remedy for customers. EUCHIPS is not liable for any incidental or consequential damage unless it is within the law.
· EUCHIPS has the right to amend or adjust the terms of this warranty, and release in written form shall prevail.