AG MILLWORKS
HANDCRAFTED DOORS FOR LUXURY OUTDOOR LIVING
SINCE 1986

(SPECIFICATIONS MAY CHANGE WITHOUT NOTICE TO IMPROVE FUNCTION OR DESIGN)

INTERIOR WOOD STICKING OPTIONS

SQUARE STICKING

BEVEL STICKING

ENERGY PERFORMANCE

PICO CLAD
OUT-SWING BI-FOLD
w/ALUMINUM SILL
(EVEN # DOORS)

SCALE: 3" = 1'-0"

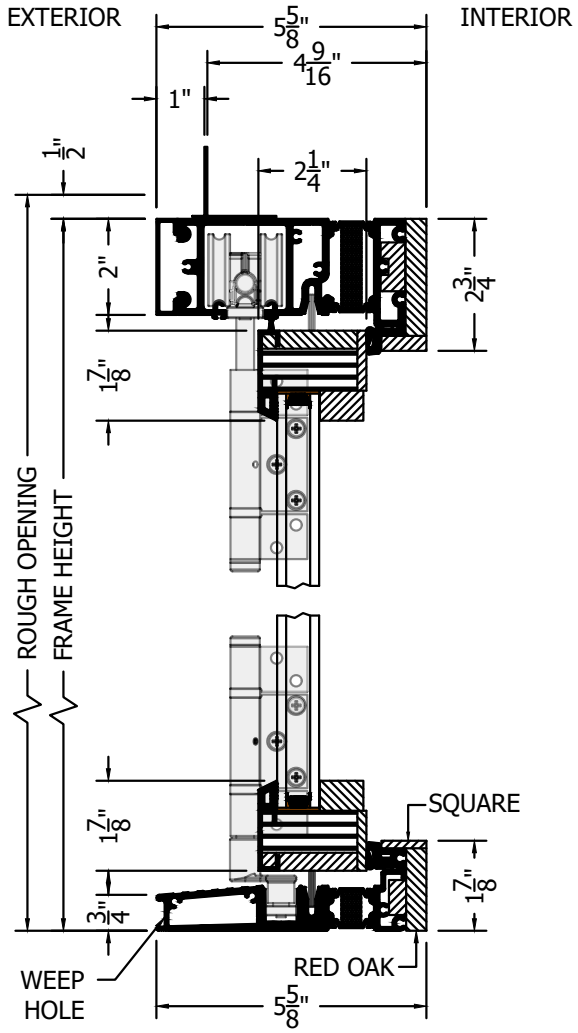

SECTION VIEW

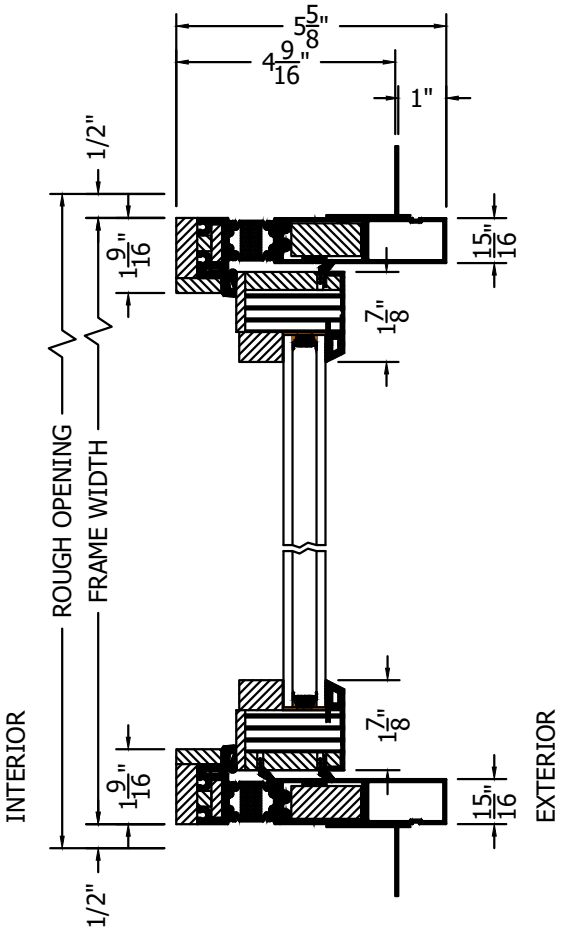

PLAN VIEW

A SILL PAN IS REQUIRED FOR EXTERIOR DOORS.

TO PRINT TO SCALE, SELECT "ACTUAL SIZE" OR DESELECT "FIT TO PAGE" IN PRINT DIALOGUE BOX

PROPRIETARY AND CONFIDENTIAL
THIS DRAWING AND ITS CONTENTS ARE THE PROPERTY OF AG MILLWORKS. REPRODUCTION OF ANY PART OF THE DRAWING IN ANY FORM WHATSOEVER WITHOUT THE PRIOR WRITTEN PERMISSION OF AG MILLWORKS IS STRICTLY FORBIDDEN. © 2021 AG MILLWORKS

08/12/25