Hallway Systems Installation Guide

SteelBlue Building Components
108 Rosslyn Rd., Carnegie, PA 15106

Phone 412-857-3496
www.steelbluebc.com

Initial Release | 11.16.2023

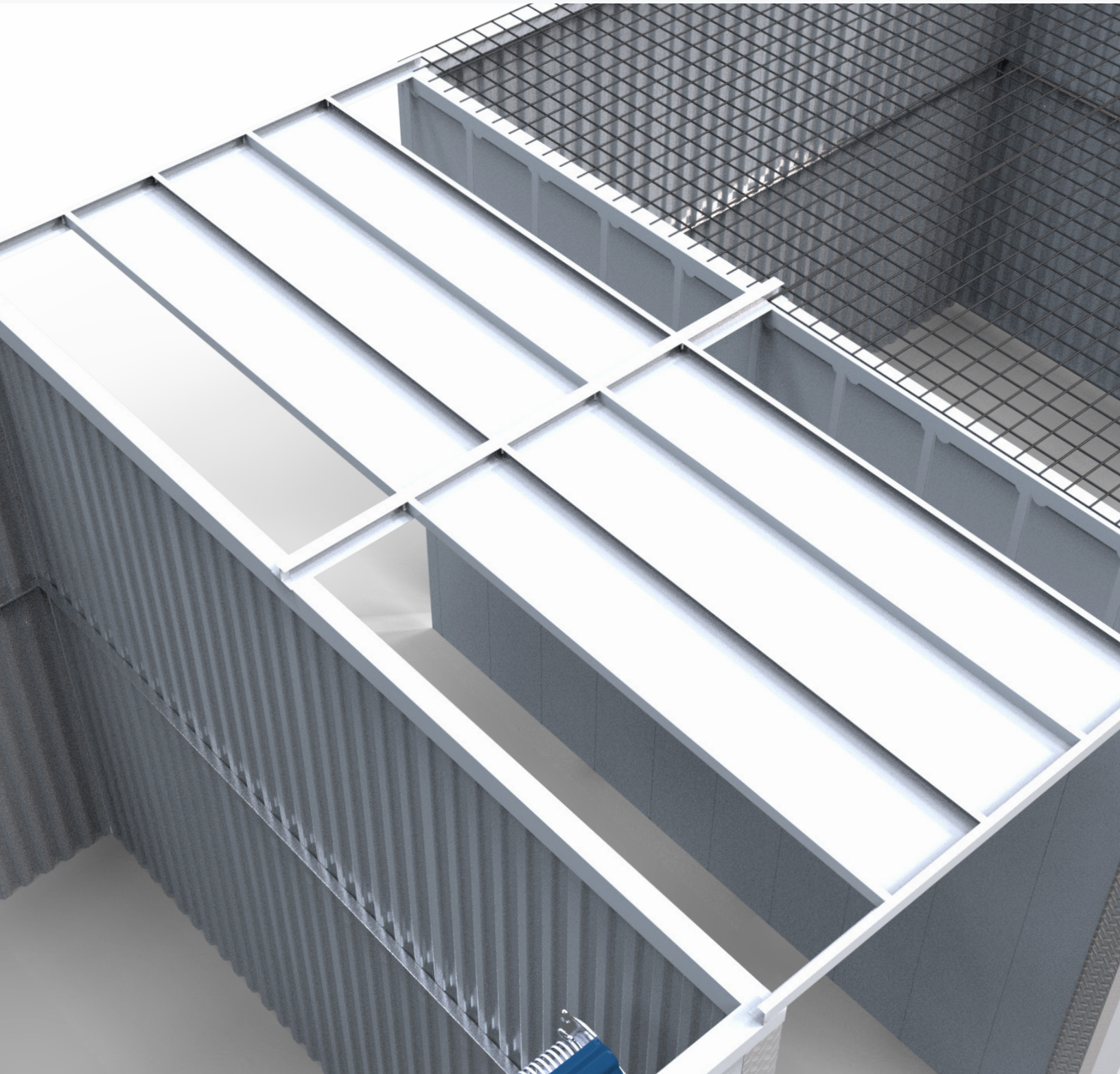

SteelBlue 9530 Series Door

9530

Opening Height	Vertical Headroom	Horizontal Headroom
Through 7′ - 4	16″	16″
Over 7′ - 4 Through 8′ - 8	16 ½″	16 ½″
Over 8′ - 8 Through 10′ - 0	17 ½″	17 ½″



Side View

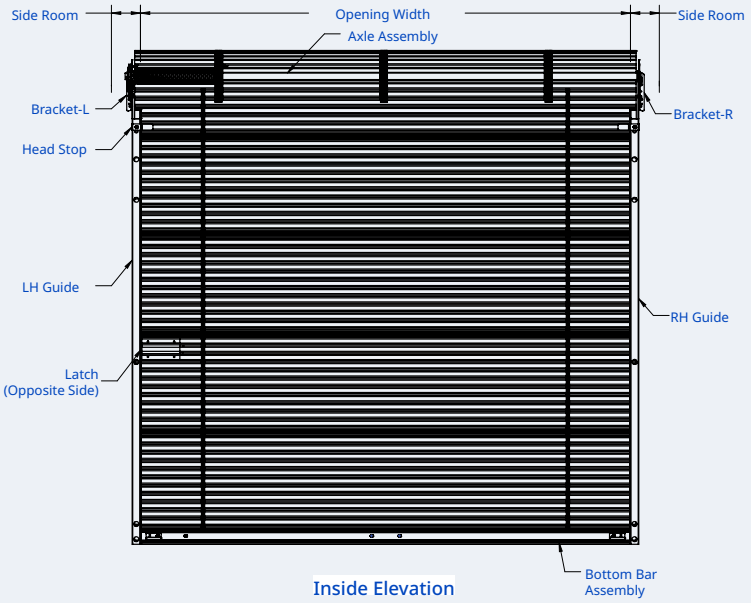

Inside Elevation

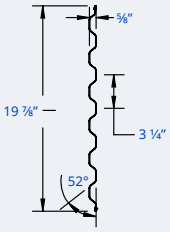

Panel Detail - 26GA

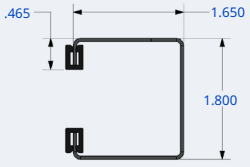

Guide Detail - 18GA

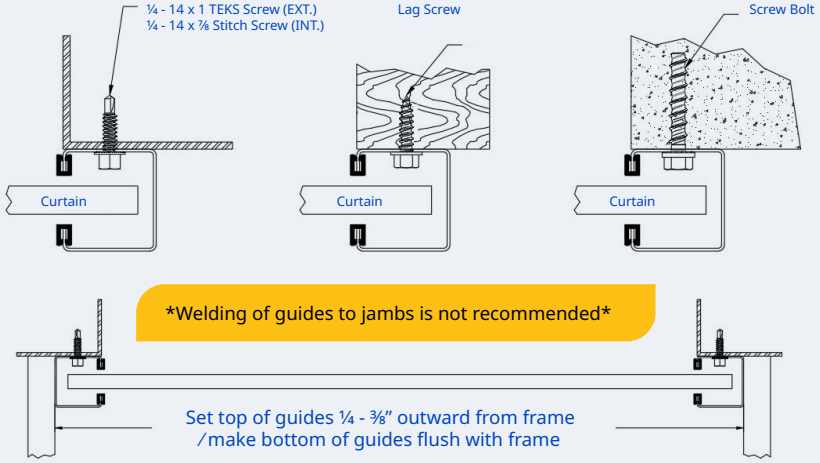

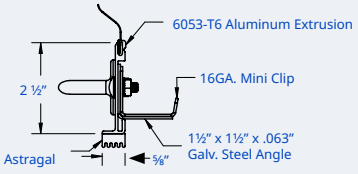

Bottom Bar Assembly

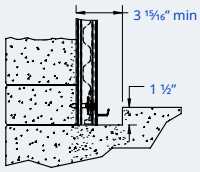

Rain Lip Detail - Exterior Application Only

Notes

- Clearances shown are recommended, lesser clearances may be possible, consult the manufacturer.
- All opening preparation, electrical power, and field painting shall be provided by others.
- Curtain finish shall be siliconzied polyester pre-paint over galvanized Grade E Steel.
- Guides, brackets, bottom bar angle, head stops, and handles are all galvanized. Mini latch shall be stainless steel or yellow zinc coated.

Parts Identification

Identification

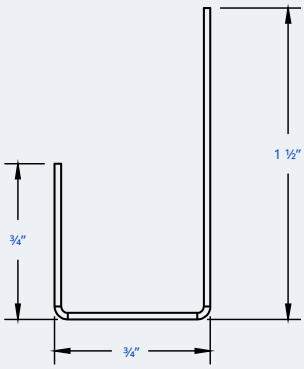

Bottom Channel
Length: 10’ - 1
MATL: 20GA.

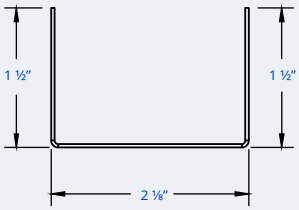

Roll-Up Frame Base Channel
Length: Varies
MATL: 20GA.

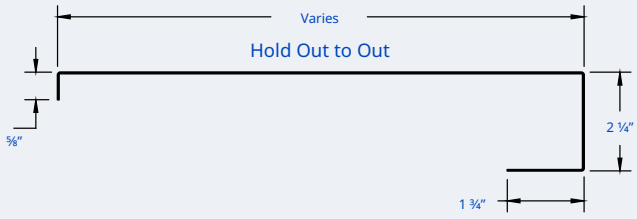

Single Roll-Up Frame
Length: Varies
MATL: 20GA.

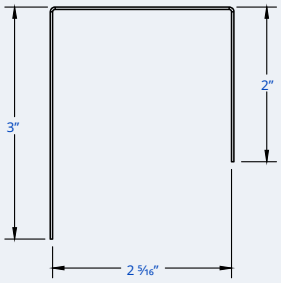

Top Cap
Length: 10’ - 1
MATL: 20GA.

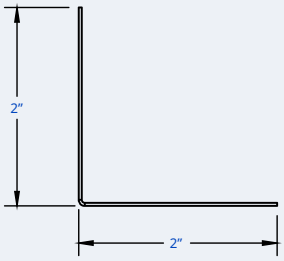

Universal Angle
Length: 10’
MATL: 20GA.



Double Roll-Up Frame
Length: Varies
MATL: 20GA.

Identification

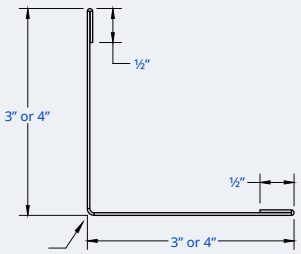

C-Starter Angle (Outside)
Length: Varies
MATL: 20GA.

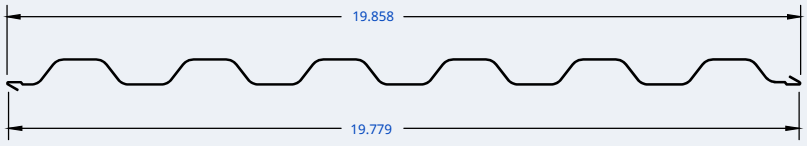

Corrugated - Securewall
Length: Varies
MATL: 26GA.

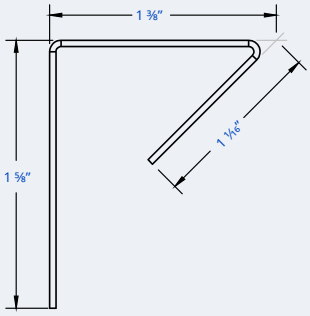

Midspan Brace
Length: 10'
MATL: 20GA.

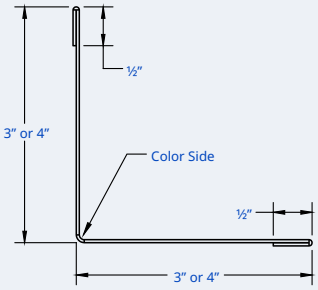

C-Starter Angle (Inside)
Length: Varies
MATL: 20GA.

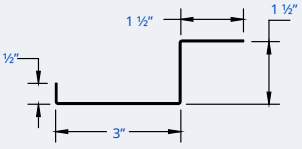

Back Plate (SICO)
Length: Varies
MATL: 20GA.

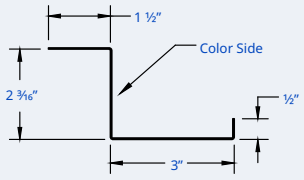

Single Flush Plate (SIFL)
Length: Varies
MATL: 20GA.

Parts Identification

Identification

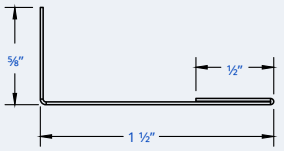

Filler Panel Side Angle
Length: Varies
MATL: 26GA.

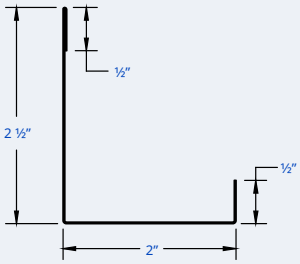

Filler Bottom Channel
Length: Varies
MATL: 26GA.



Filler Panel
Length: Varies
MATL: 26GA.

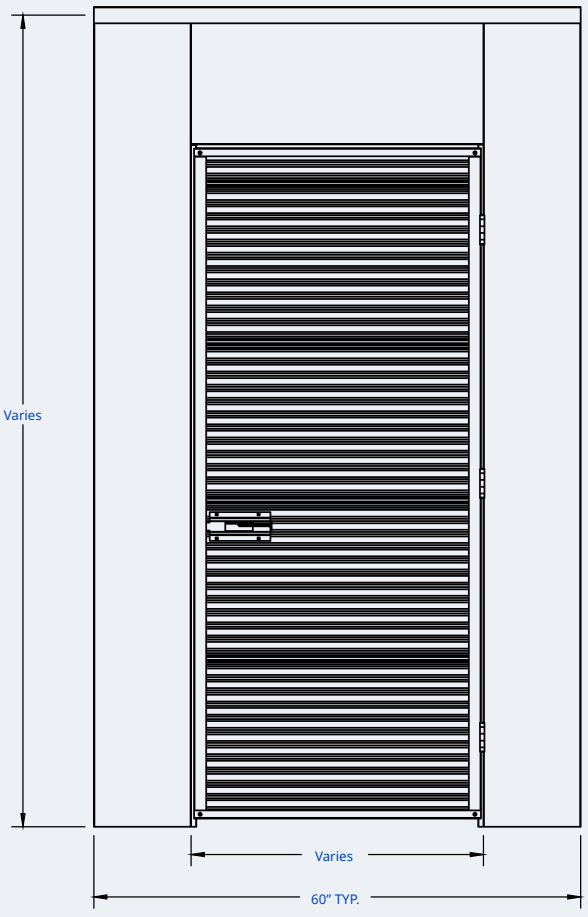

Swing Door
Height: Varies

Step 1

- Establishing boundaries and dimensions
- Establish chalk-line layout on floor to corresponding architectural unit mix. Snap lines on floor and mark dimensions of door openings
- Note: Hash marks (/) show layout dimension with corresponding measurement between each mark

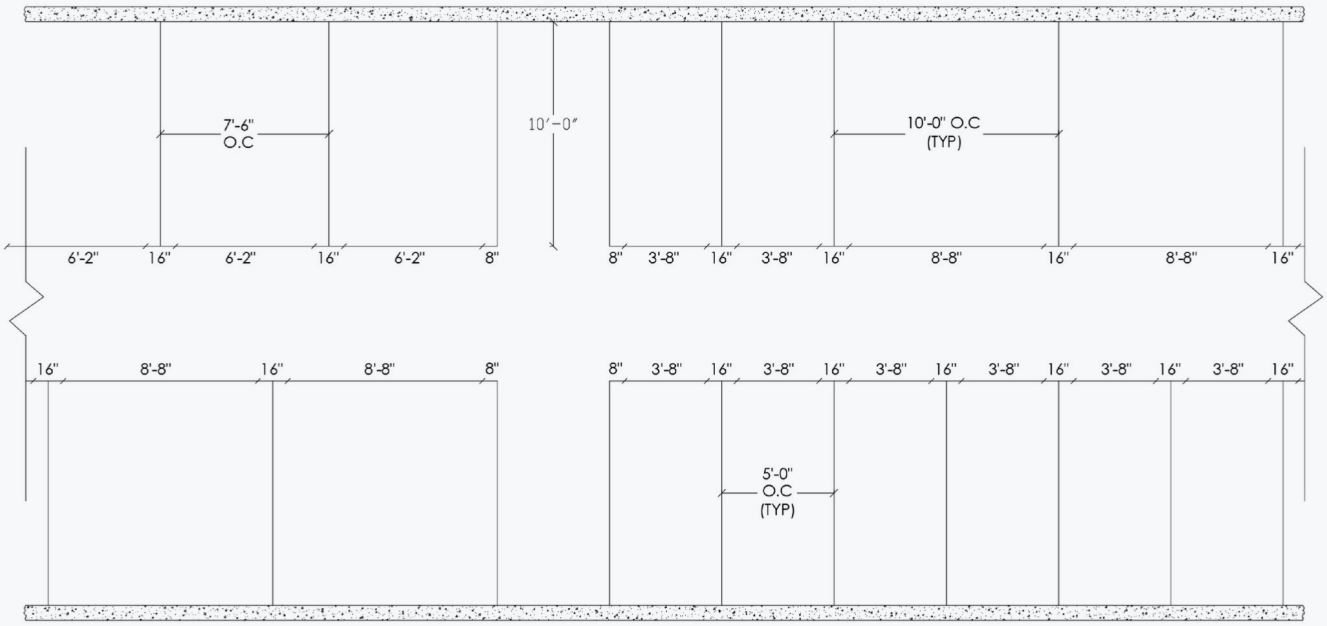

Sample Unit Layout

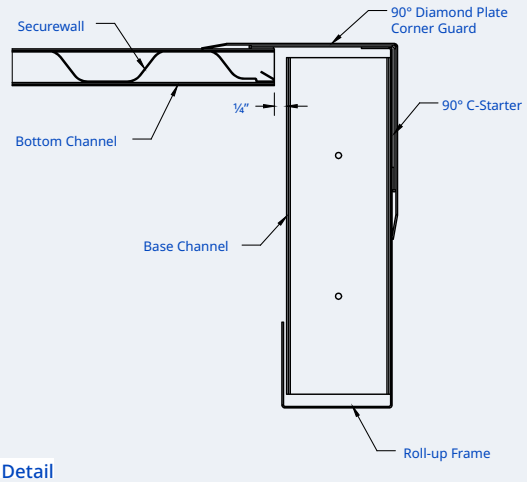

90° Corner Detail

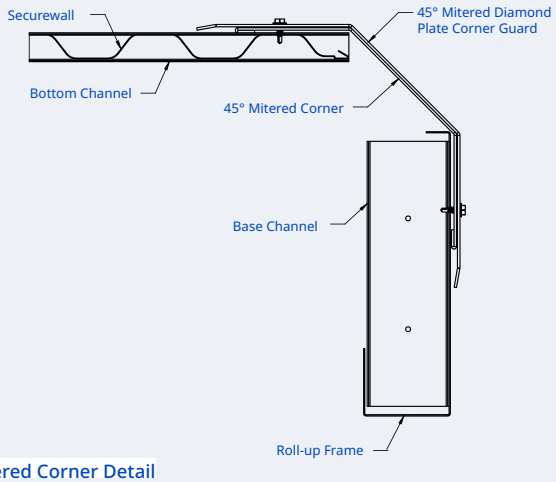

45° Mitered Corner Detail

Step 2

Attach floor channel and base anchors

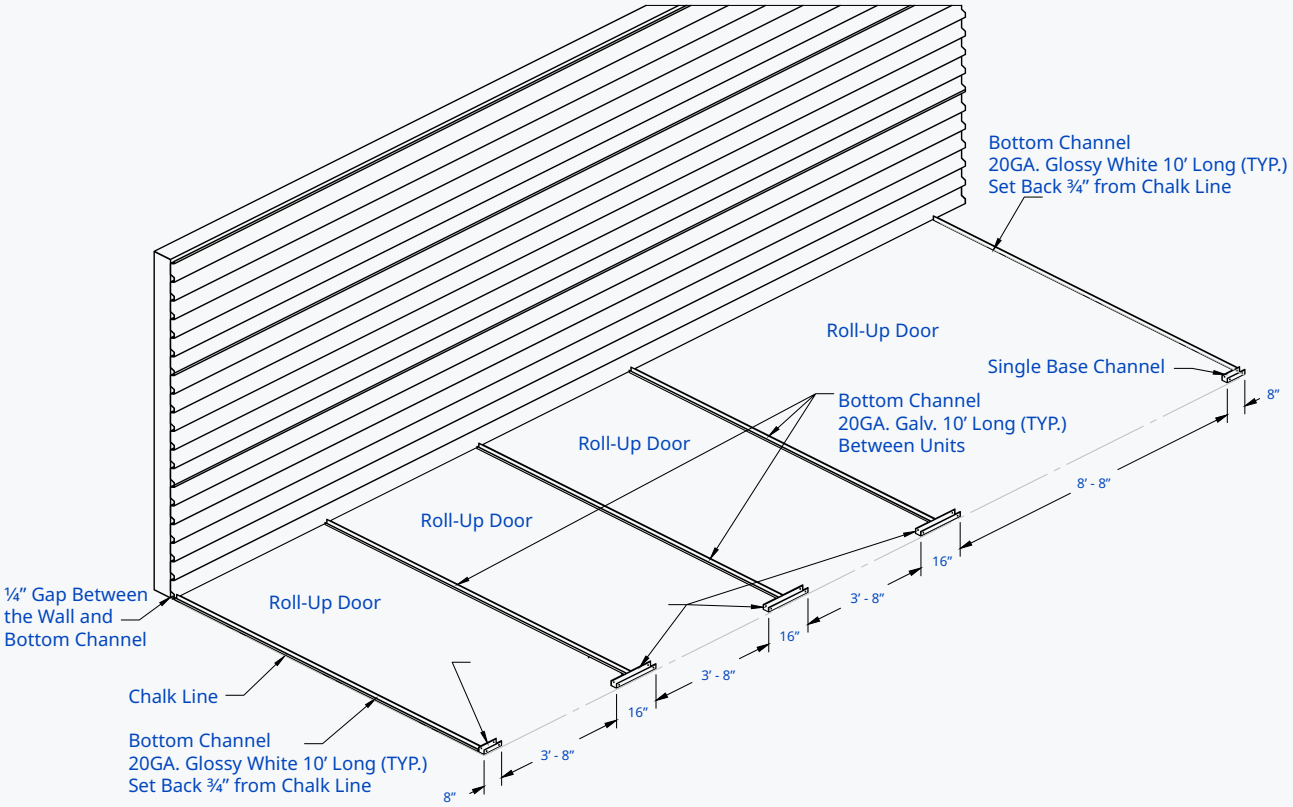

Notes

- All bottom channels to be fastened 4 places per 10' using powder actuated fasteners w/ 3/4" long pin (supplied by others)
- Fasten hallway side bottom channels 3/4" to the inside of the chalk line
- Fasten base channels on chalk line
- Leave 1/4" gap between bottom channel and base channel locations

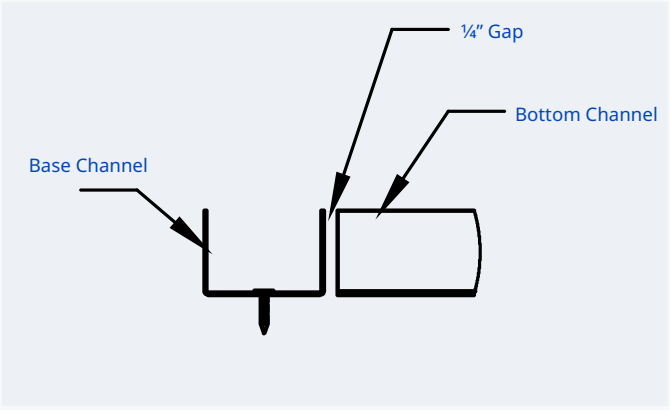

Notes

- Fasten 16-24” double base channel to floor with (3) powder actuated fasteners w/ 3/4” pin
- Fasten 8-12” single base channel (not shown) to floor with (2) powder actuated fasteners with 3/4” pin

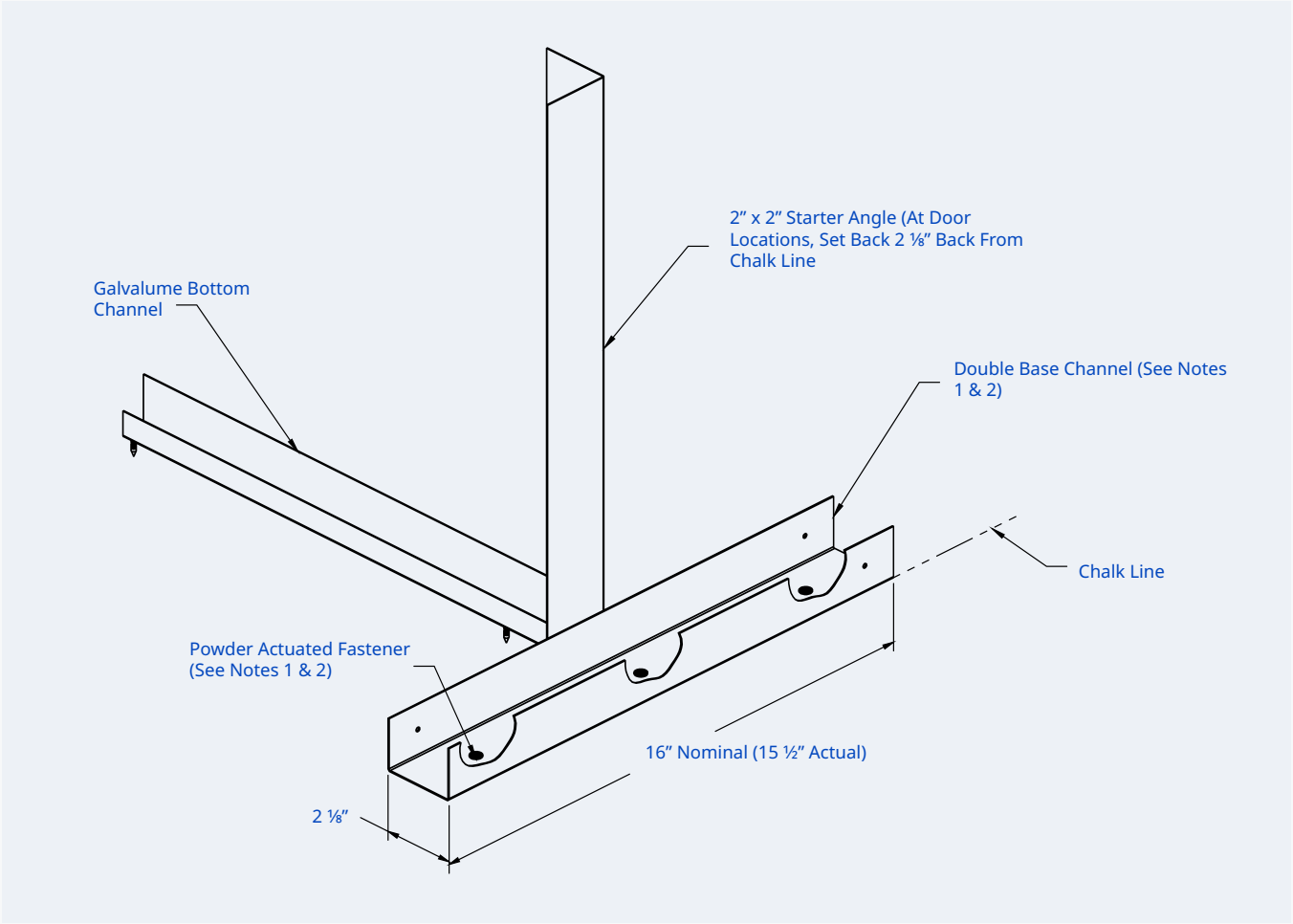

Step 3

Install starter and top angles

Step 3.1

- Place 2” x 2” galvalume starter angles against wall at bottom channel as shown. Plumb starter angle with level and fasten to wall

  For Hallway starter angle, use same method using 2” x 2” glossy white starter angle

Step 3.2

- Fasten 2” x 2” galvalume starter angle to base and bottom channel w/ #8 x 1/2” TEK screws -- keep level as possible (apply temporary bracing as needed)

Step 3.3

- Place 3” x 3” glossy white starter angles on outside corners -- fasten at bottom -- level, plumb, and brace in both directions as shown

Step 3.4

- Install 2” x 2” x 10’ universal angle flush to top of starter angle at all locations -- fasten at each starter angle using #8 x 1/2” galv TEK screws -- level and plumb the starter angle on hallway side

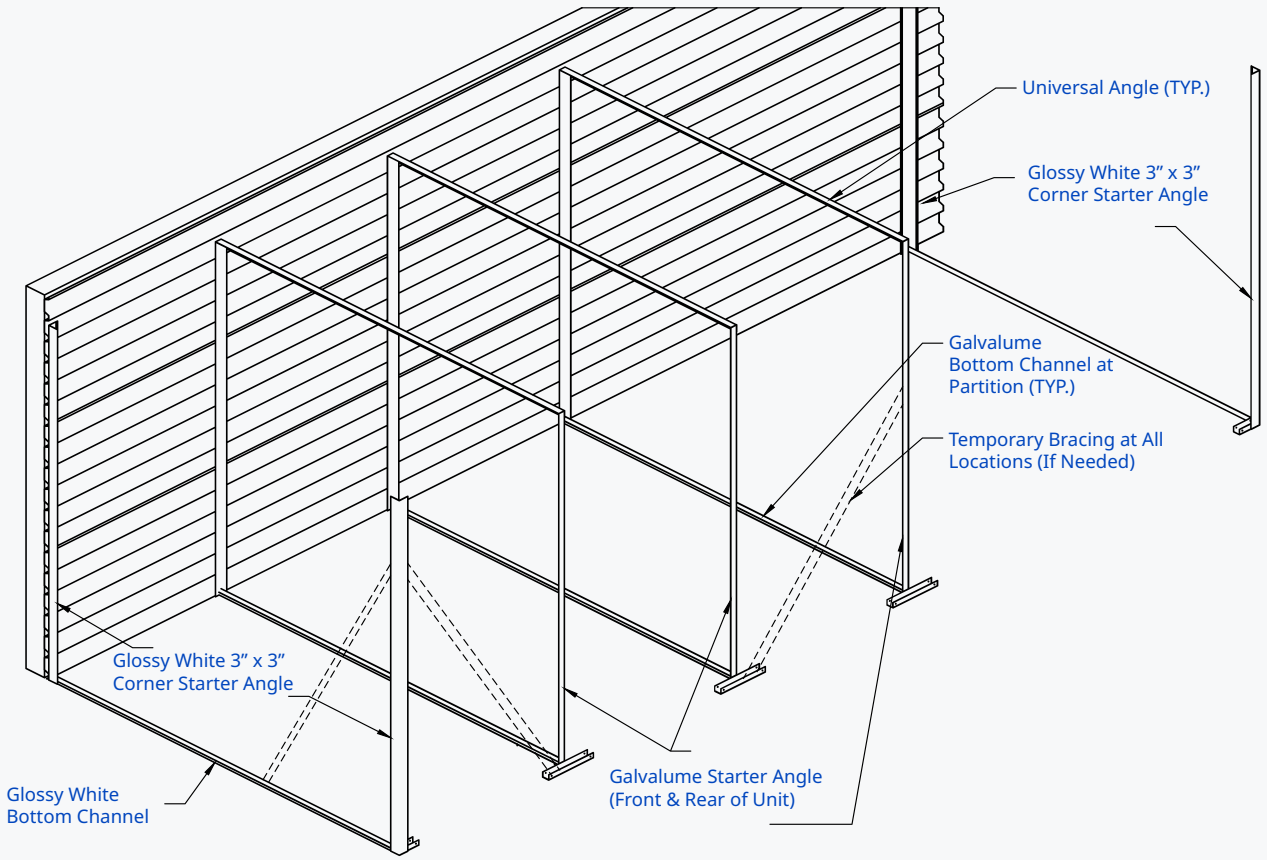

Step 4

Install hallway top cap

Step 4.1

- Place glossy white top cap (1), to face of starter angle holding top cap even with the top of the starter angle

  Fasten w/ #8 x 1/2” TEK screws at each starter angle

Step 4.2

- Place glossy white top cap (2), to the face of the galvalume top and starter angles previously installed

  Fasten top cap at outside corner of corner starter angle and at the starter angles

  see detail 1

Step 4.3

- Level galvalume starter angle from side to side before attaching top angle, fasten hallway top cap to galvalume partition starter angle through 3” rear leg

  see detail 2

Note

- Always join pieces of top cap at a support

  Never splice together over a unit

  see detail 3

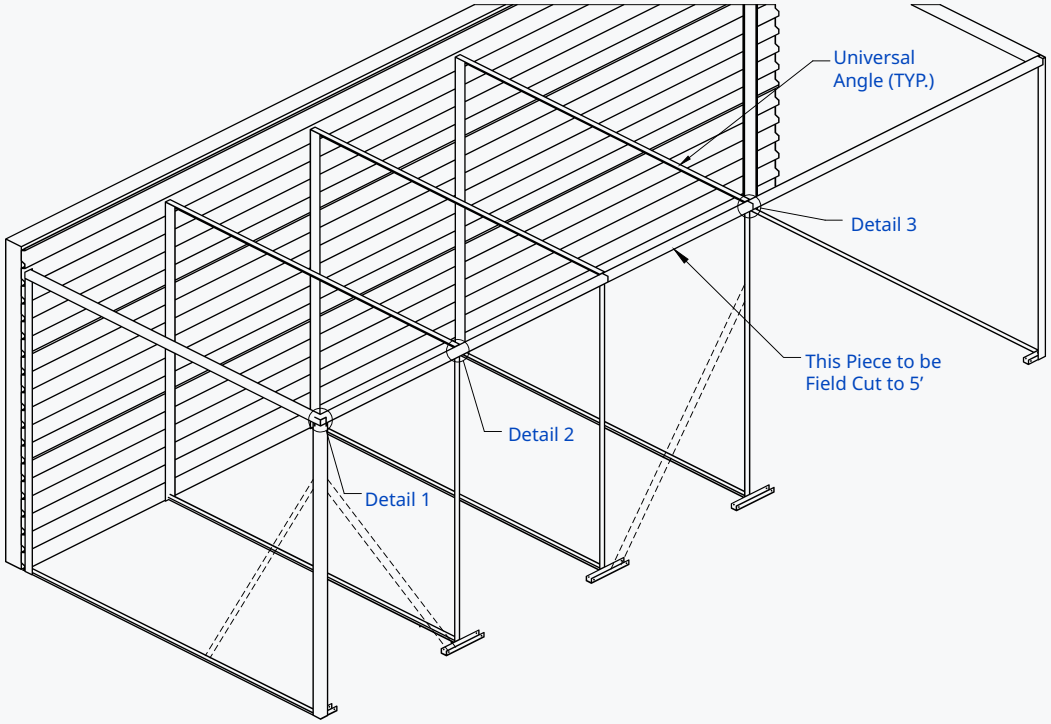

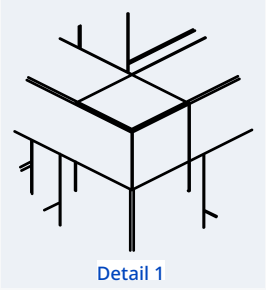

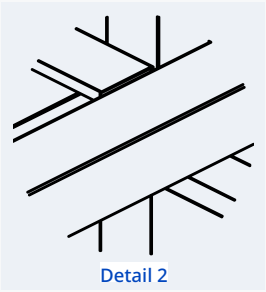

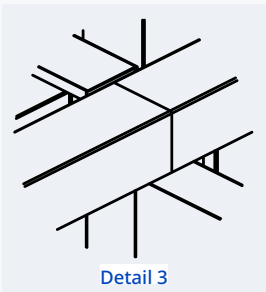

Typical Framing for Hallway Systems at Single or Double Roll-Up Frames

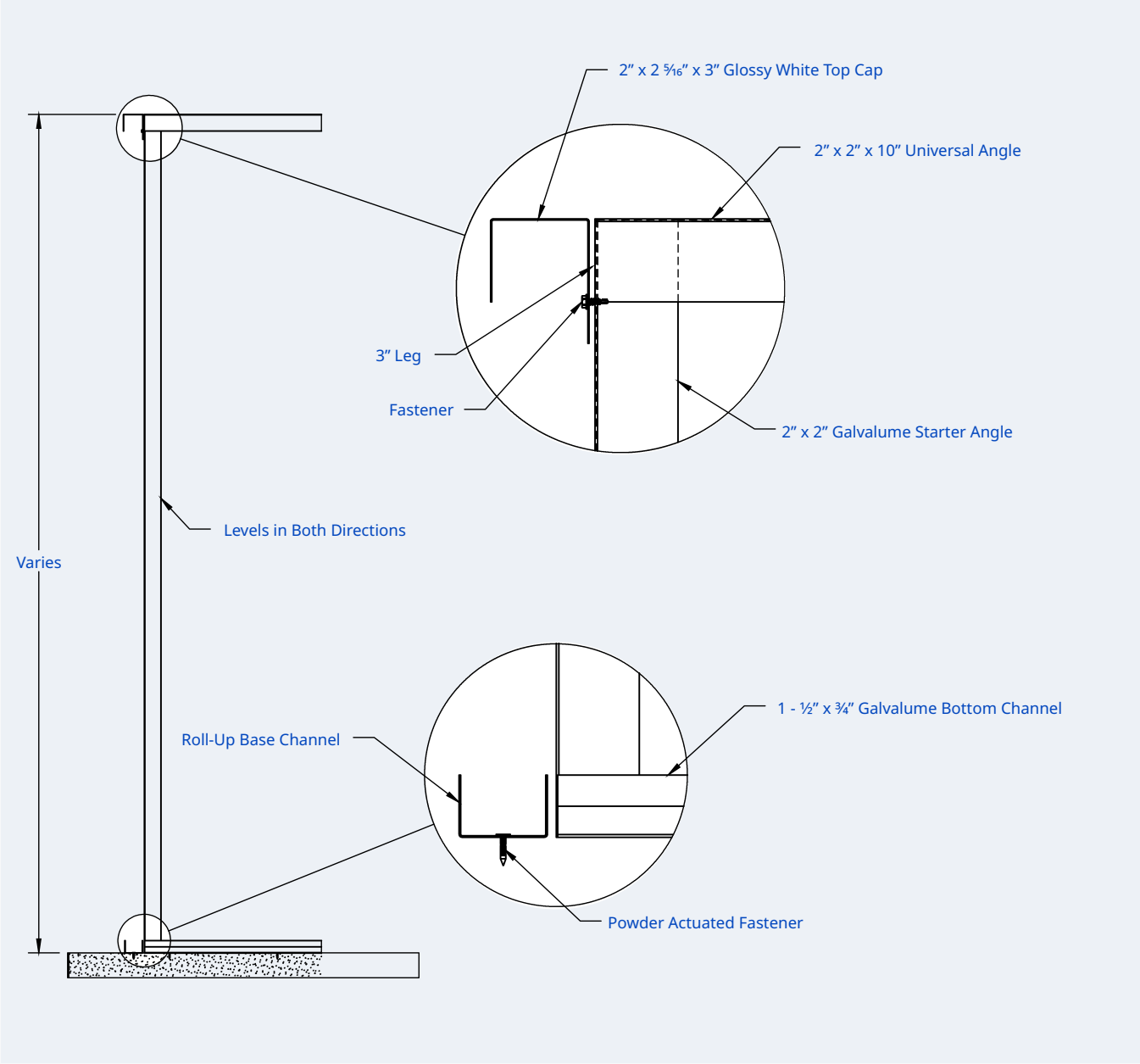

Step 5

Installation of partition panel and mid-span

Step 5.1

- Decrimp galvalume partition panel at all 4 corners where edges have been crimped by the cutting operation during manufacturing

Note

- When installing unit partition, place galvalume partition panels inside bottom channel and up against top angle, locking sheets together as shown in detail 1
- After partition panels are locked together they may not work out to be the correct length for a unit -- in this case, overlap the two sheets nearest the wall as shown in detail 2
- When installing mid-span in step 6, use (18) screws per 10’ piece of mid-span (3 screws per galvalume partition panel) -- mid-span is to be attached to side of partition the starter angle is on (see detail 3)

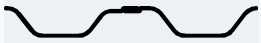

Detail 1
Locking Seam (TYP)



Detail 2
Overlapping Seam

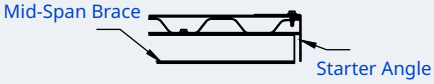

Detail 3
Mid-Span Bracing at Starter Angle



Section A-A

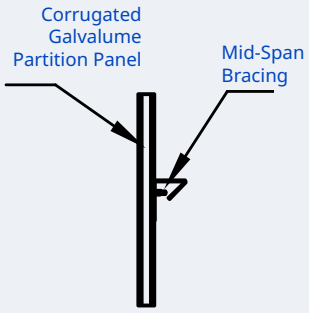

Section B-B
Mid-Span Bracing Attachment to Partition Panel

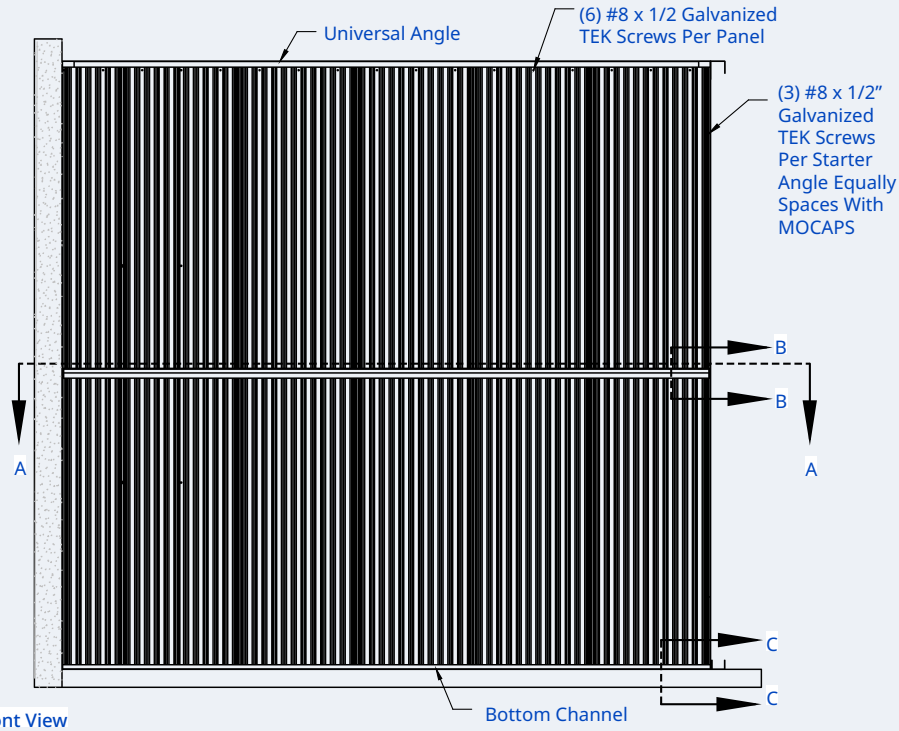

Front View
Application of Mid-Span Bracing

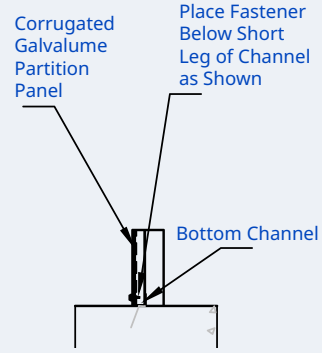

Section C-C
Partition Panel Attachment to Bottom Channel

Single Flush (SIFL) Installation for Flush Header Installation

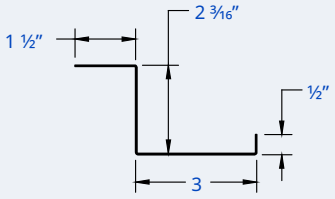

Single Flush (SIFL)

Note

- Measure from the base of the roll-up frame to door opening height.
- Fasten at minimum of 2 locations per side

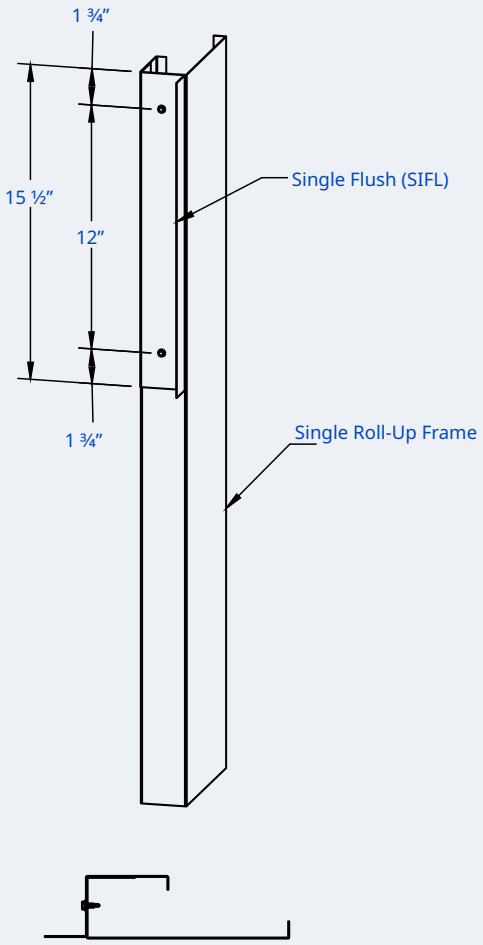

Top View
Single Roll-Up Frame

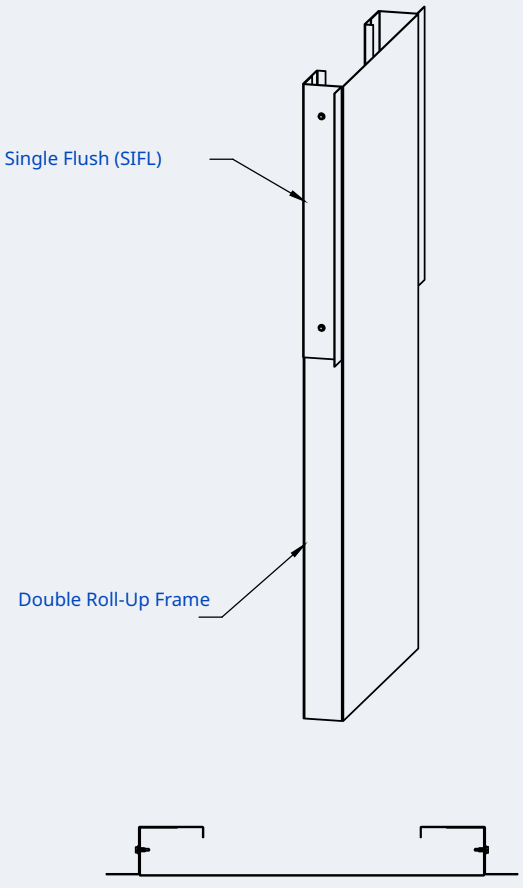

Top View
Double Roll-Up Frame

Back Plate (SICO) Installation for Corrugated Header Installations

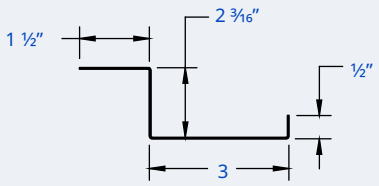

Back Plate (SICO)

Notes

- Measure from the base of the roll-up frame to door opening height.
- Fasten at minimum of 2 locations per side

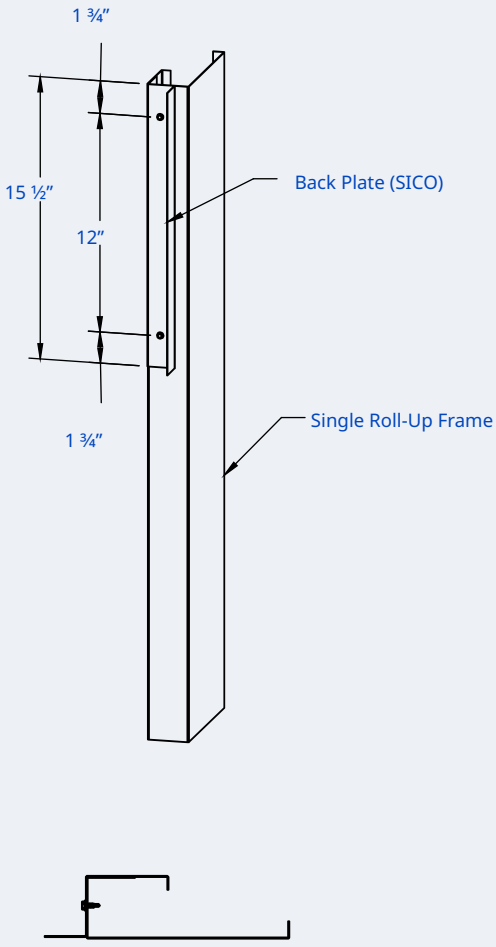

Top View
Single Roll-Up Frame

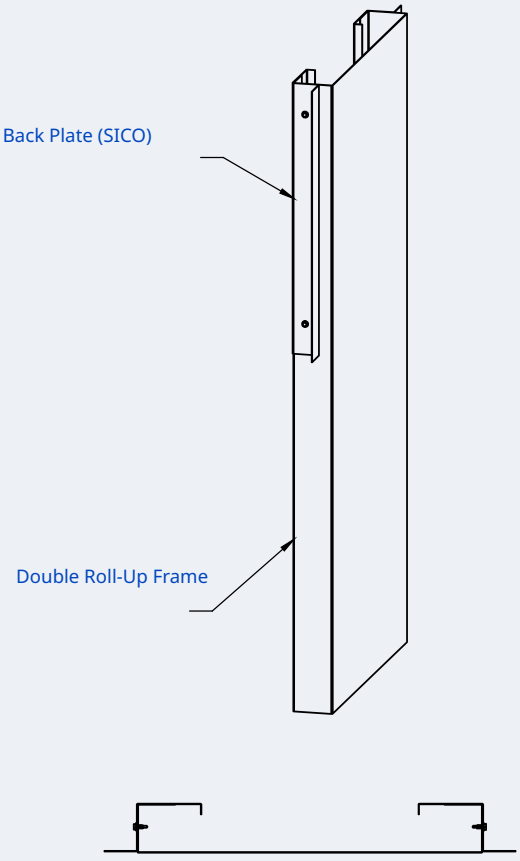

Top View
Double Roll-Up Frame

Step 6

Install hallway partition sheets, midspan and roll-up frames

Step 6.1

- Install hallway partition sheets (20” glossy white corrugated hallway partition) -- Fasten from outside with #8 x 1/2” white TEK screws -- Use (3) #8 x 1/2” galv TEK screws

Step 6.2

- Level the midspan bracing on the inside of the hall partition and fasten from the outside with white #8 x 1/2” TEK screws on every other rib in corrugation -- Install unit partition midspan bracing in the same manner using galv #8 x 1/2: TEK screws -- See section B-B on sheet 12

Step 6.3

- Install single and double roll-up frames making sure the frames are level and plumb -- Use white #8 x 1/2” TEK screws as shown on sheet 12

Note

- Always join pieces of top cap at a support

  Never splice together over a unit

  see detail 3

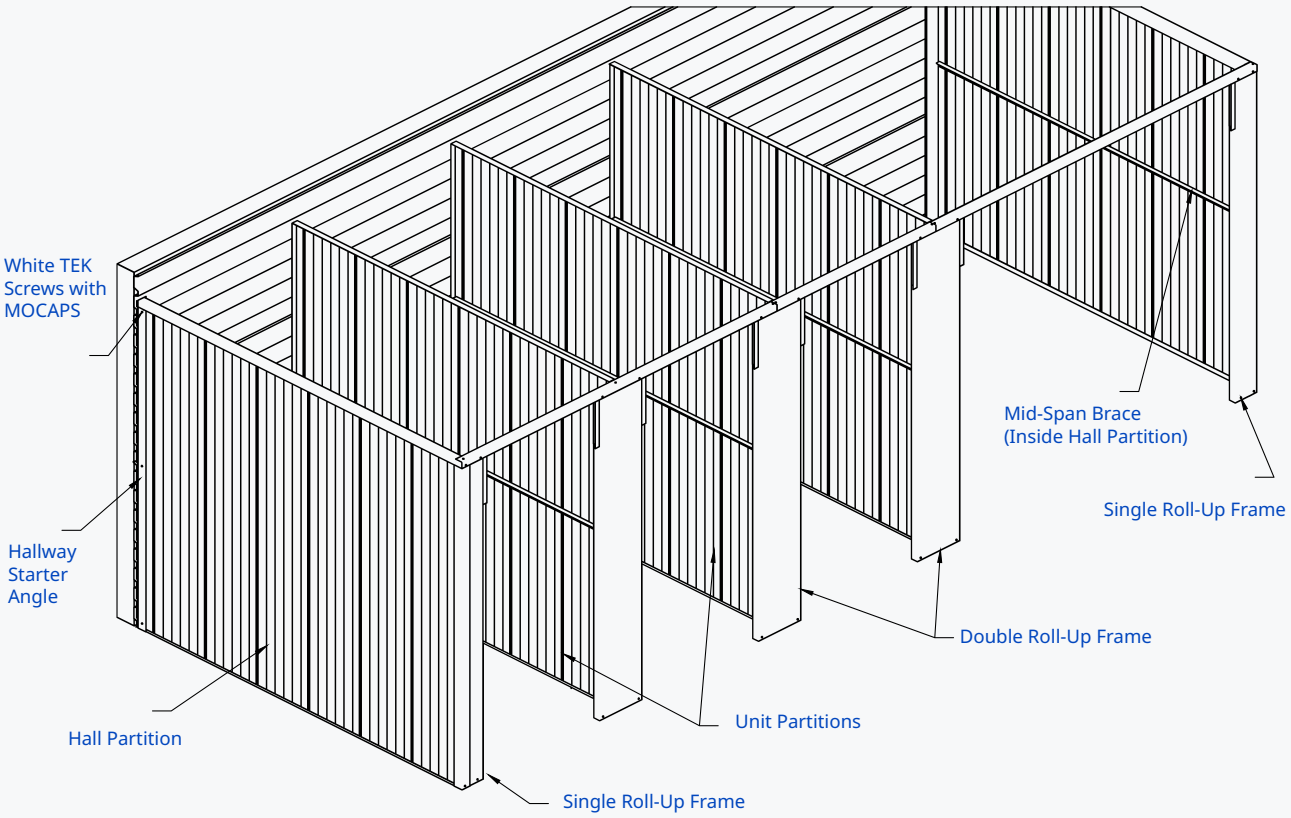

TEK Screw Locations

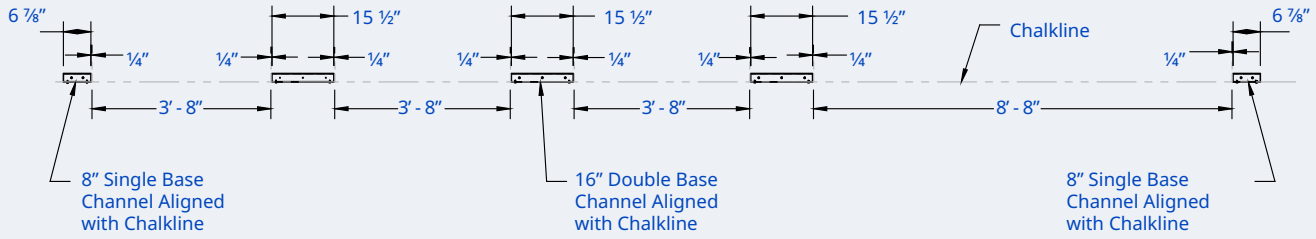

Section A-A

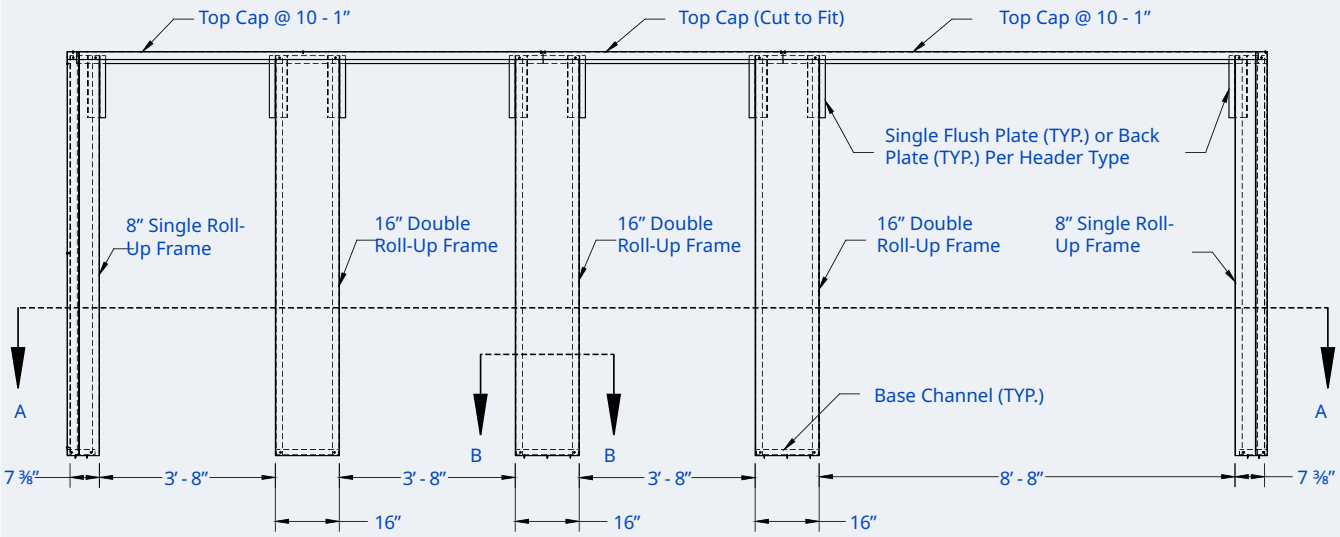

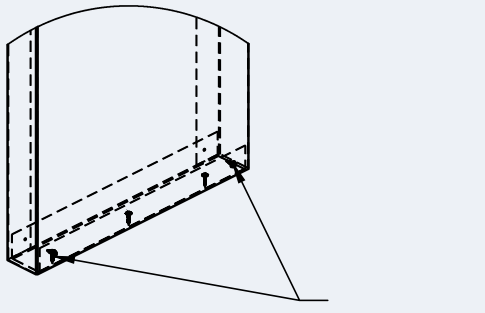

3D View

Fasten Roll-Up Frame to Base Channel on Front Using (2) White #8 x ½" TEK Screws, Evenly Spaced

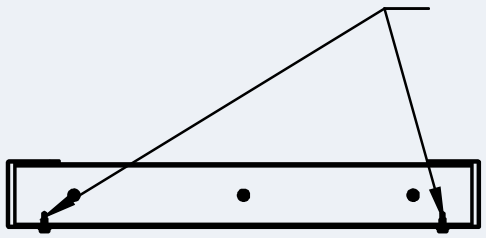

Section B-B

Step 7A

Installation of flush header panel

Step 7.1

- Mark interior roll-up frame door height on face of the roll-up frame (snapping a chalk line across multiple openings at one time is recommended)

Step 7.2

- Notch the top of the flush headers 1-1/2” back from each end on top return leg (as shown)

Step 7.3

- Fasten flush header at each end as shown in figure 1 using #8 x 1/2” white TEK screws (top screw will go through top cap)

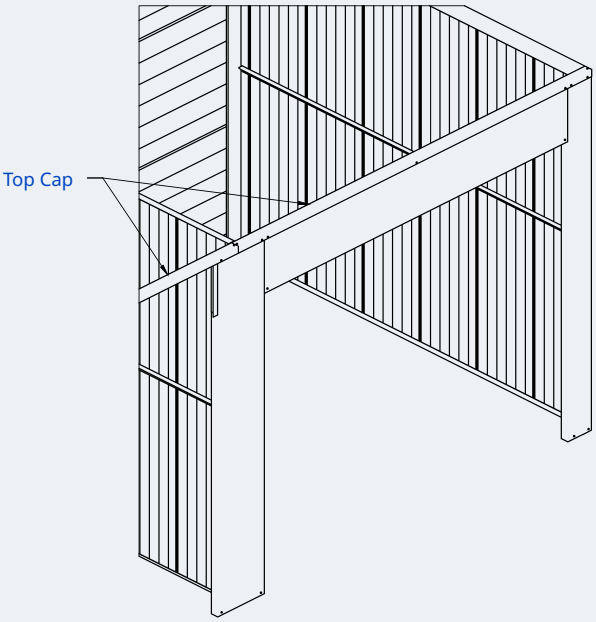

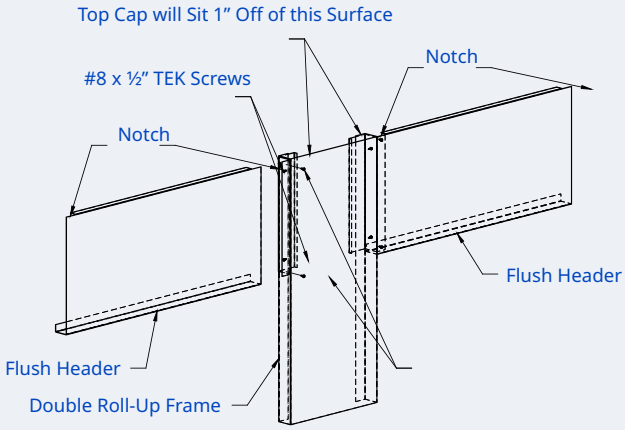

Figure 1
(Top Cap Not Shown)

Note

- Quantity of fasteners depend on the size of the flush header -- Four to five fasteners are typically required for a 16” flush header -- Overtightening of the screws can result in dimpling of the material

Step 7B

Installation of corrugated filler panel

Step 7.1

- Mark interior roll-up frame door height on face of the roll-up frame (snapping a chalk line across multiple openings at one time is recommended)

Step 7.2

- Fasten filler panel sheet to inward legs of the back plate using (2) #8 x 1/2 galv TEKS screws per side (min. 2, at least 1 per foot) hold panel level

Step 7.3

- Fasten the filler side angle over the top of the filler panel -- Fasten to sheet using (1) #8 x 1/2 TEKS screw on high rib of sheet

Step 7.4

- Fasten filler panel bottom channel with the 2- 1/2 leg facing outward -- Make sure it is even with the door height marks on the roll-up frames -- Hold filler panel bottom channel in place and fasten uniformly at each side with the #8 x 1/2 TEK screws -- Place one screw in the middle of the bottom channel on face

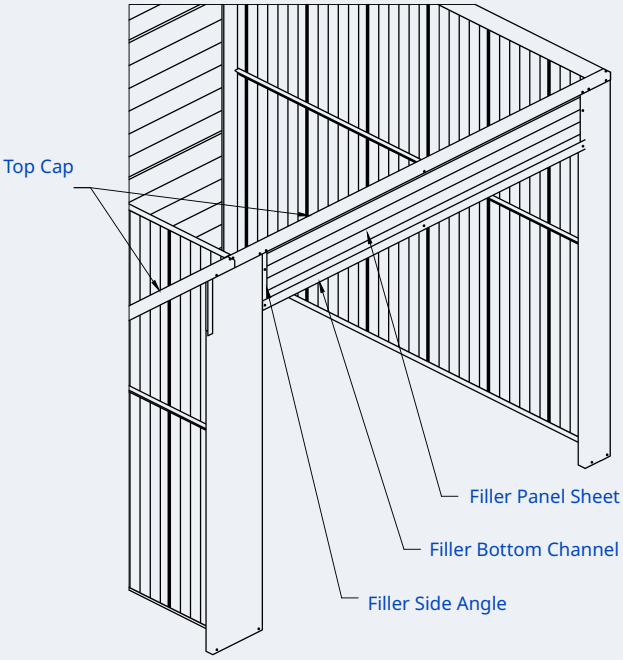

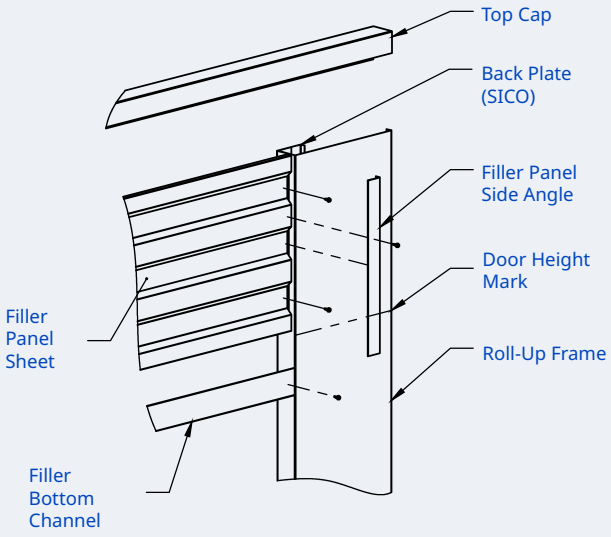

Figure 1

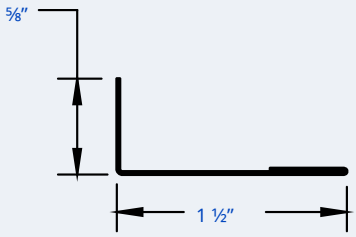

Filler Panel Side Angle

Note

- Quantity of fasteners depend on the size of the filler panel -- Nine (9) fasteners are typically required for a 16” filler panel -- Overtightening of the screws can result in dimpling of the material

Step 8A

Installation of roll-up doors with flush headers

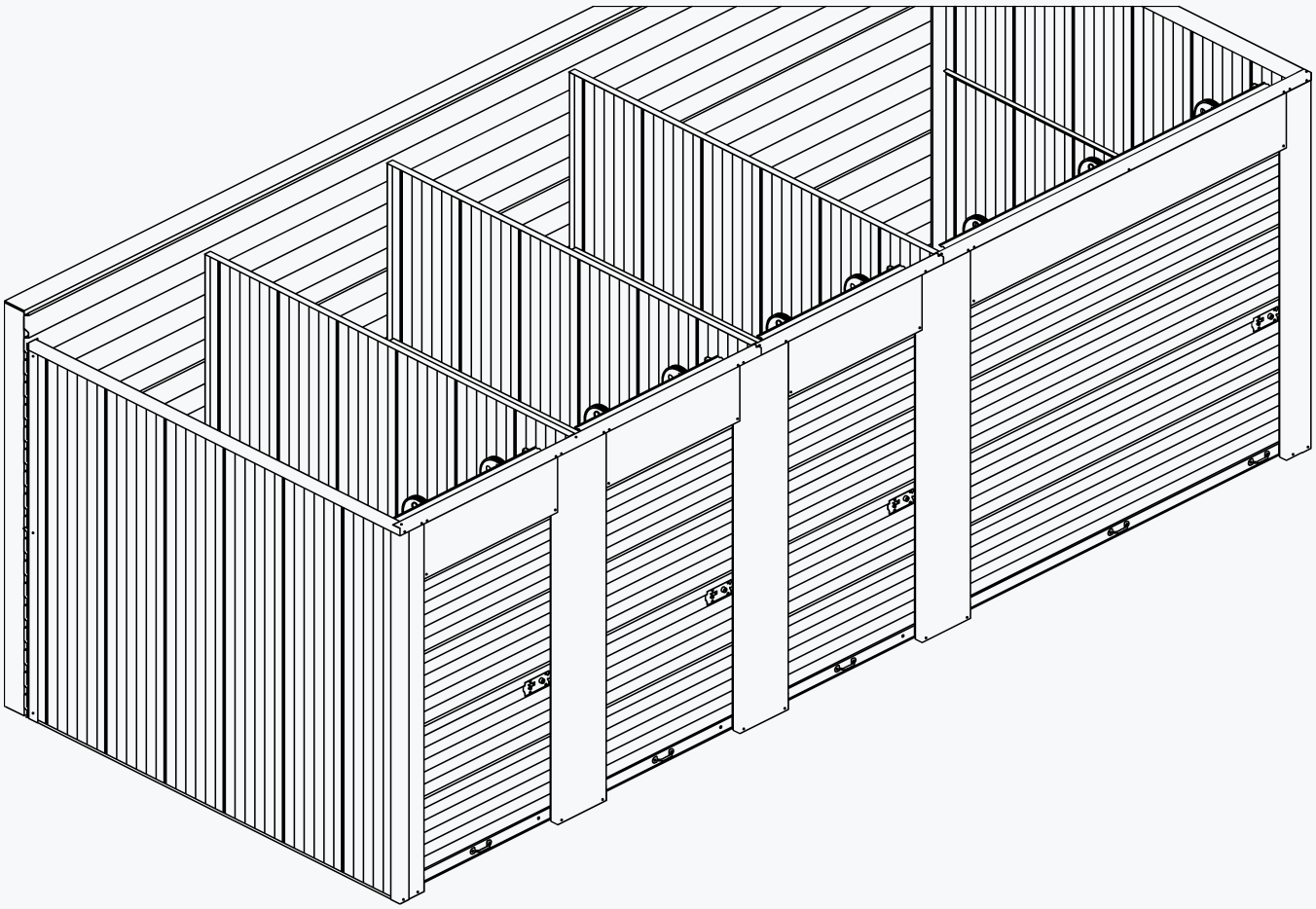

Note

- See roll-up door installation instructions on sheet 3

Note

- Mounting fasteners required per door:

  1. (16-20) 1/4 - 14 x 7/8 stitch TEKS screws (brackets & guides) for steel interior installations

  2. (16-20) 1/4 -14 x 1 TEKS screws (brackets & guides) for steel exterior installations

Step 8B

Installation of roll-up doors with corrugated headers

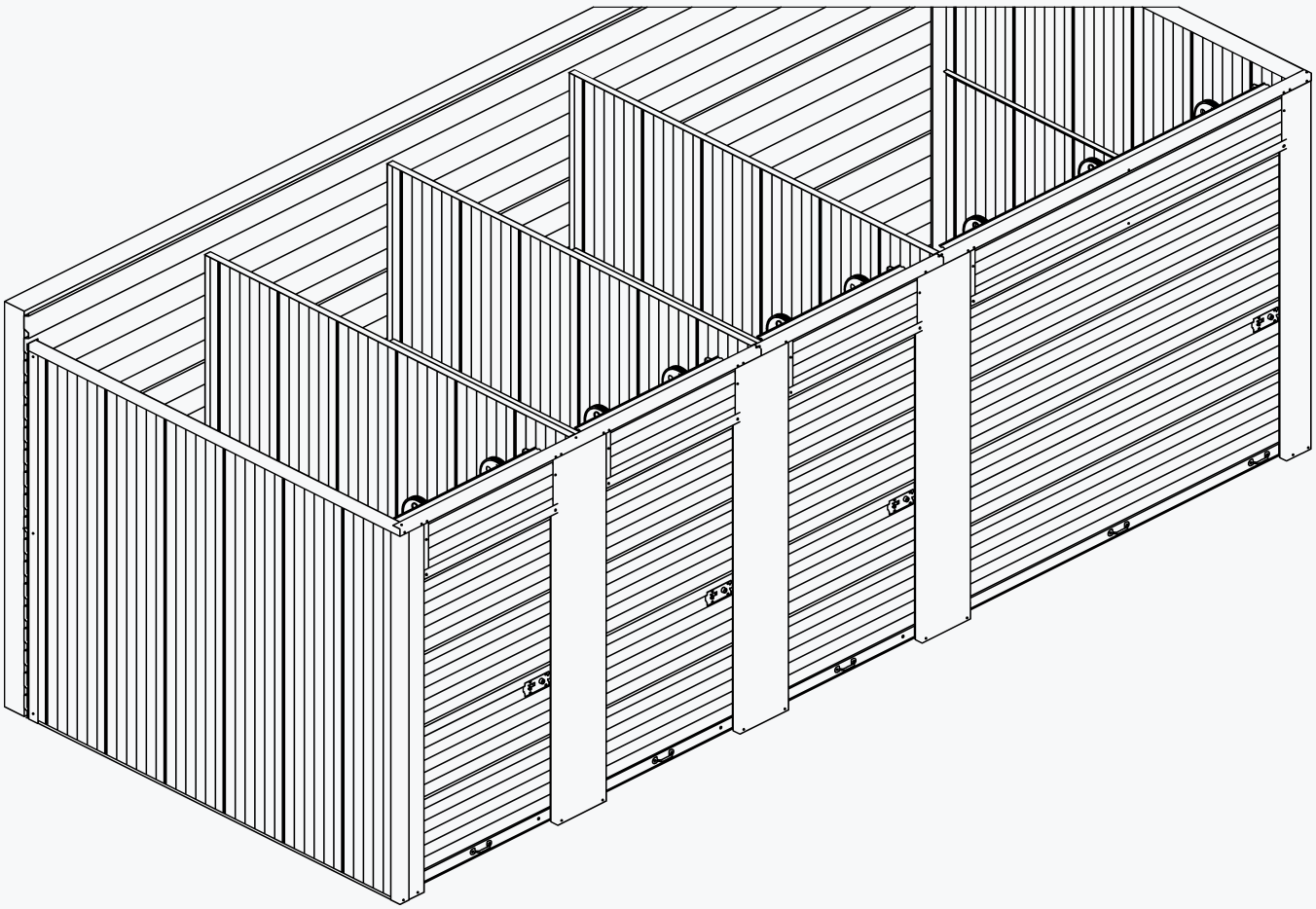

Note

- See roll-up door installation instructions on sheet 2

Note

- Mounting fasteners required per door:

  1. (16-20) 1/4 - 14 x 7/8 stitch TEKS screws (brackets & guides) for steel interior installations

  2. (16-20) 1/4 -14 x 1 TEKS screws (brackets & guides) for steel exterior installations

SteelBlue Unit Mesh Detail

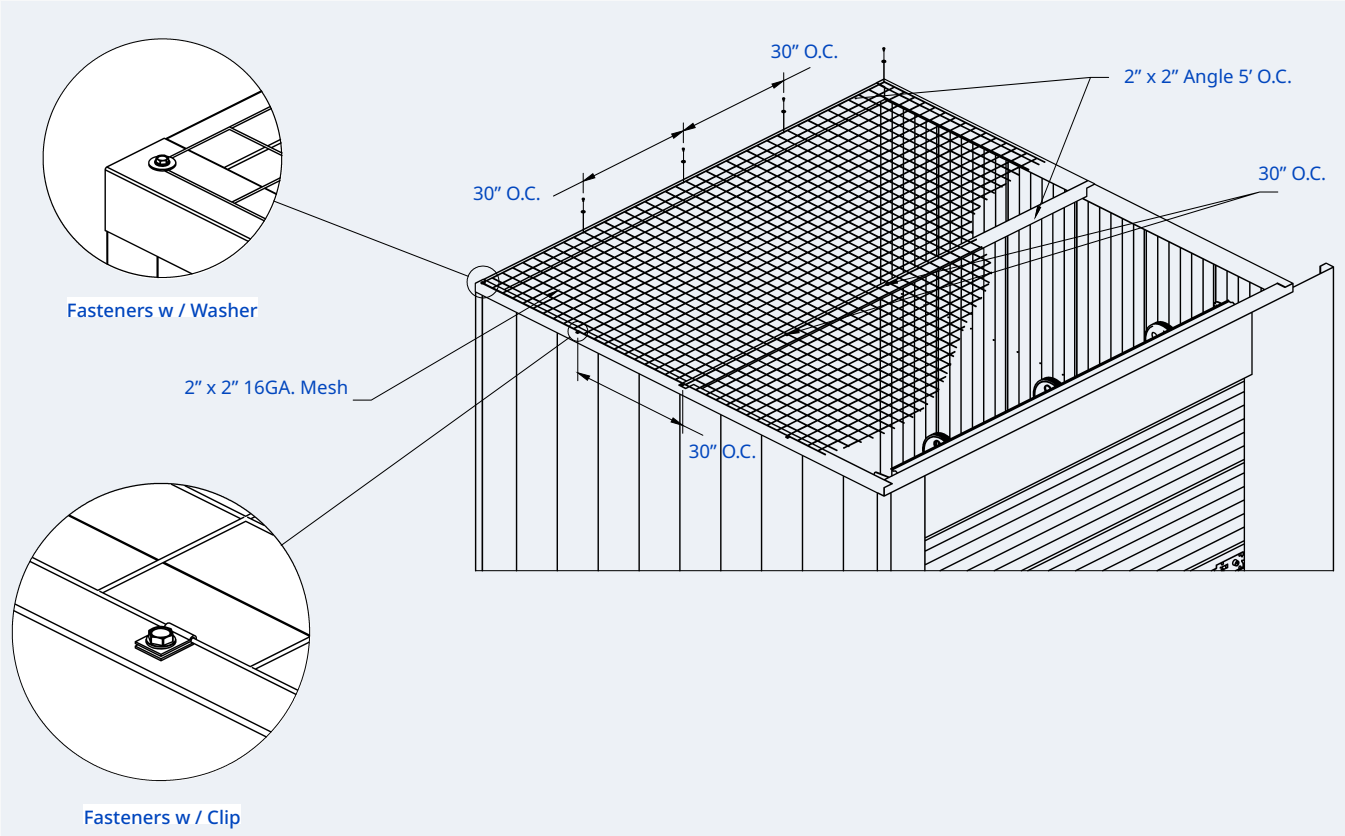

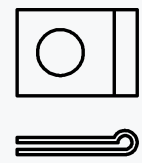

Mesh Clip Option

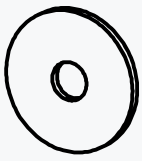

Flat Washer
Fender .750



#8 x ½ TEK Screw

✦ In leau of washer use mesh clip if provided



SteelBlue

SteelBlue Building Components
108 Rosslyn Rd., Carnegie, PA 15106

Phone 412-857-3496
www.steelbluebc.com

Initial Release | 09.18.2023