SPM-3C_AW / FAN COIL 3PH POWER MODULE – FULL OPTIONS and THERMOSTAT CONNECTION

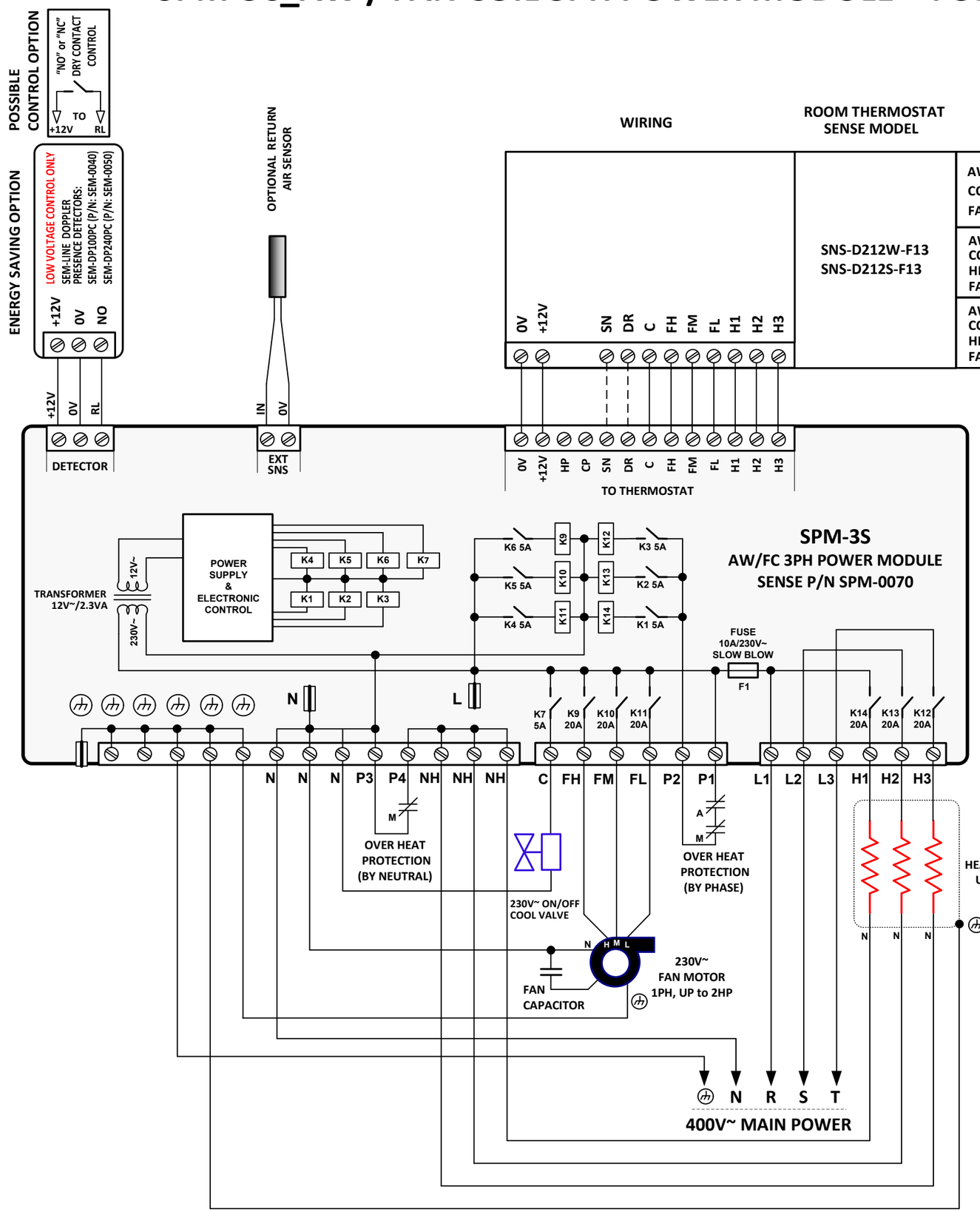

WIRING	ROOM THERMOSTAT SENSE MODEL	AW / FC SYSTEM TYPE
0V +12V SN DR C FH FM FL H1 H2 H3	SNS-D212W-F13 SNS-D212S-F13	AW or FC UNIT TYPE: 2-PIPES COOL / HEAT: COMMON 230VAC ON/ON/OFF VALVE FAN: 3-SPEEDS MOTOR 230VAC UP TO 1HP COOL/HEAT — ON/OFF — SPM-1C TERMINAL C—H1 CONNECT JUMPER BETWEEN OUTPUTS C ◄—► H1
		AW or FC UNIT TYPE: 4-PIPES COOL: ON/OFF 230VAC VALVE HEAT: ON/OFF 230VAC VALVE FAN: 3-SPEEDS MOTOR 230VAC UP TO 1HP COOL — ON/OFF — SPM-1C TERMINAL C HEAT — ON/OFF — SPM-1C TERMINAL H1
		AW or FC UNIT TYPE: 2-PIPES COOL: ON/OFF 230VAC VALVE HEAT: 1-STAGE EL. HEATING ELEMENT UP TO 3.5KW FAN: 3-SPEEDS MOTOR 230VAC UP TO 1HP COOL — ON/OFF — SPM-1C TERMINAL C HEAT — ON/OFF — SPM-1C TERMINAL H1

MECHANICAL DIMENSIONS

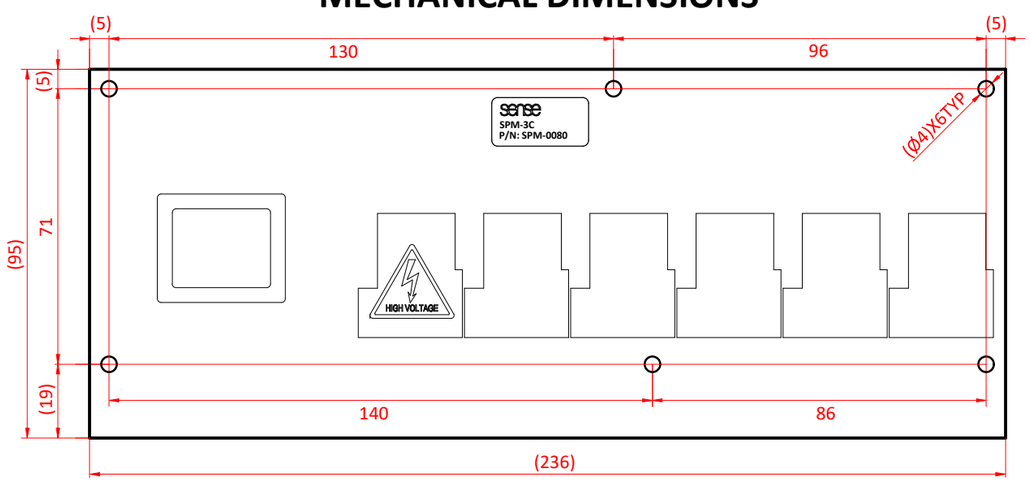

NOTES:

1. OPTIONAL RETURN AIR SENSORS : (SENSE NTC Thermistors 10K@25ºC B=3970)
2. DOPPLER PRESENCE DETECTOR : SEM-DP100PC (P/N:SEM-0040 or SEM-DP240PC (SEM-0050)

HARDWARE VERSION	0.4	PRODUCT:	SPM-3C
SOFTWARE VERSION	N/A	PRODUCT P/N:	SPM-0080
DOCUMENT REVISION	0.1		
DATE	24.06.2022	SENSE ENERGY CONTROL LTD. Hasadan 10, Holon 5581560, Israel tel +972 36229100 info@sense-en.com fax +972 36229101 www.sense-en.com	sense
DESIGN	ALEX KUGEL		