SUPER B
lithium batteries

Manual

Version
September 2022



EPSILON 12V90Ah

User Manual Epsilon 12V90Ah

Dear customer,

This manual contains all the information necessary to install, use and maintain the Li-ion battery. We kindly ask you to read this manual carefully before using the product. In this manual, the Super B Epsilon 12V90Ah Li-ion battery will be referred to as: the Li-ion battery. This manual is meant for the installer and the user of the Li-ion battery. Only qualified, certified personnel may install and perform maintenance on the Li-ion battery. Please consult the index at the start of this manual to locate information relevant to you.

During the use of the product, user safety should always be ensured, so installers, users, service personnel and third parties can safely use the Li-ion battery.

Copyright© Super B All rights reserved. Licensed software products are owned by Super B or its subsidiaries or suppliers, and are protected by national copyright laws and international treaty provisions. Super B products are covered by Dutch and foreign patents, issued and pending. Information in this publication supersedes that in all previously published material. Specifications and price change privileges reserved. Super B is a registered trademark.

For more information please contact:

Super B Lithium Power B.V.
Europalaan 202
7559 SC Hengelo (Ov) The Netherlands
Tel: +31 (0)88 0076 000
E-mail: info@super-b.com
www: www.super-b.com

Table of content

1. Safety guidelines and measures **5**
1.1. General 5
1.2. Disposal 5

2. Introduction **6**
2.1. Product description 6
2.2. Intended use 6
2.3. Glossary of Terminology 6
2.4. Used symbols 7

3. Product specifications **7**
3.1. Product features 7
3.2. Product specifications 7
3.2.1. Electrical specifications 7
3.2.2. Mechanical specifications 7
3.2.3. Charge & discharge specifications 8
3.2.4. Temperature specifications 8
3.2.5. Compliance specifications 8
3.2.6. General product specifications 8
3.3. Environmental conditions 9
3.4. Scope of delivery 9
3.5. Connections, indicators and battery controls 10
3.5.1. J1 / CAN1 (RJ45) 11
3.5.2. J2 Inputs (WR-MPC3 3mm Male Header) 11
3.5.3. J3 Monitor (WR-MPC3 3mm Male Header) 11
3.5.4. J4 Outputs (WR-MPC3 3mm Male Header) 12
3.5.5. J5 / CAN 2 (RJ45) 12
3.5.6. S1 Push button 12
3.5.7. S2 Configuration Switch 13
3.5.8. X1 / X2, Battery terminals 13
3.5.9. Bluetooth 13
3.5.10. LED Indicators 14
3.5.11. Operational modes 15
3.5.12. System components operation modes dependencies 15
2.8. Optional Components 16

4. Installation **16**
4.1. General information 16
4.2. Unpacking 16
4.3. Preparing the Li-ion battery for use 16
4.3.1. Placement of the Li-ion battery 16
4.3.2. Set the Li-ion battery in normal operation mode 17
4.4. Connection wires 17

4.4.1. Connecting power cables with automotive type terminals 17
4.4.2. Connecting shrink fit type of power cables 18
4.4.3. Connecting power cables with automotive type terminals and caps 19
4.5. Connecting to the CAN interface (RJ45) 21
4.5.1. Connecting the data cables 21
4.6. Connecting a charger to the Li-ion battery 22
4.7. Connecting Li-ion batteries in parallel 22
4.8. Disconnecting the Li-ion battery 23

5. Battery use 23
5.1. General information 23
5.2. Charging 23
5.2.1. Charging rate 23
5.2.2. Battery balancing 24
5.3. Li-ion battery self consumption 24
5.4. Battery History Recording 24

6. Inspection and cleaning 24
6.1. General information 24
6.2. Inspection 24
6.3. Cleaning 25

7. Storage 25

8. Transportation 25

9. Disposal and recycling 26

10. Troubleshooting 26

11. Warranty and liability 27

1. Safety guidelines and measures

1.1. General

- Do not short-circuit the Li-ion battery.
- Treat the Li-ion battery as described in this manual.
- Do not dismantle, crush, puncture, open or shred the Li-ion battery.
- Do not expose Li-ion battery to heat or fire. Avoid exposure to direct sunlight.
- Do not remove the Li-ion battery from its original packaging until required for use.
- In the event of electrolyte leaking, do not allow the liquid to come in contact with the skin or eyes. If contact has been made, wash the affected area with water and seek medical advice.
- Always use a class 2 charger which is specifically provided for use with a Lithium Iron Phosphate battery (LiFePO4). For more information, please refer to the charging manual on our website.
- Observe the plus (+) and minus (–) marks on the Li-ion battery and equipment and ensure correct use.
- Do not mix batteries of different manufacturer, capacity, size, type or age within a system.
- Keep the Li-ion battery clean and dry.
- Secondary batteries need to be charged before use. Always use a correct charger (see charging manual on our website) and refer to this manual for proper charging instructions.
- Do not leave the Li-ion battery on prolonged charge when not in use.
- During long periods of storage maintenance, charging is needed to prevent deep discharge by self discharge
- Retain the original product documentation for future reference.
- Disconnect the Li-ion battery from the equipment when not in use.

⚠ **Warning!** Keep the Li-ion battery away from water, dust and contamination. Place the Li-ion battery in well ventilated areas.

1.2. Disposal



Dispose the Li-ion battery in accordance with local, state and federal laws and regulations. Do not mix with other (industrial) waste.

2. Introduction

2.1. Product description

The Epsilon 12V90Ah is a Lithium Iron Phosphate rechargeable battery. The unique combination of state-of-the art technology and smart software makes this Li-ion battery a robust, safe and easy to use energy storage solution.

The Li-ion battery uses safe Lithium Iron Phosphate (LiFePO4) technology. With its integrated battery management system (BMS) the Li-ion battery is protected from deep discharging, overcharging and overheating. Eliminating the need for an external safety relay means the Li-ion battery is very easy to install.

The Epsilon 12V90Ah Li-ion battery also has integrated battery monitoring which provides details about its status such as voltage, current, temperature, state of charge and time remaining. Hands-on monitoring is possible via Bluetooth, external monitoring devices and LED indicators inform you about the actual status of your Li-ion battery.

2.2. Intended use

The Epsilon 12V90Ah Li-ion battery serves as a energy source of 12V in power systems for recreational vehicles, commercial vehicles, leisure boats, commercial vessels and stationary applications. Potential applications of this Li-ion battery include: off grid power supply, marine power supply, medium for (renewable) energy storage and (traction) battery for vehicles.Use as a starter battery is not possible. Never install multiple Li-ion batteries in series. Up to 8 batteries can be connected in parallel to increase the total capacity up to 720Ah. For more Li-ion batteries in parallel always consult with Super B.

2.3. Glossary of Terminology

BMS:	Battery Management System
Charge cycle:	A period of use from fully charged, to fully discharged, and fully recharged again
Endurance Life-cycle:	The products maximum lifespan, achieved by following the guidelines presented in this manual
LiFePO4	Lithium Iron Phosphate
SoC:	State of Charge
CCCV	Constant Current - Constant Voltage
DoD	Depth of Discharge

Table 1. Glossary of terminology

2.4. Used symbols

The following icons will be used throughout the manual:

⚠ **Warning!** A warning indicates severe damage to the user and/or product may occur when a procedure is not carried out as described.

⚠ **Caution!** A caution sign indicates problems may occur if a procedure is not carried out as described. It may also serve as a reminder to the user.

3. Product specifications

3.1. Product features

- Traction battery
- Lithium Iron Phosphate (LiFePO4): Safe lithium technology
- Integrated short circuit protection
- Integrated BMS (Battery-Management system)
- Terminals for 2x M8 bolts
- Integrated protection device for maximum protection and safety
- Communication interface: Bluetooth (wireless) and CANopen (wired)
- Battery monitoring / History Storage
- Adaptive cell balancing
- Monitoring via BeInCharge Bluetooth app for iOS and Android

3.2. Product specifications

3.2.1. Electrical specifications

Nominal capacity	90Ah
Energy	1152Wh
Nominal voltage	12.8V
Open circuit voltage	13.2V
Self discharge	See datasheet

Table 2. Electrical specifications

3.2.2. Mechanical specifications

Dimensions (LxWxH)	353 x 175 x 190 mm / 13.9" x 6.9" x 7.5"
Weight	12.5 kg / 27.6 lbs
Case material	PBT + PC
Ingress protection	IP51

Cell type / chemistry	Cylindrical - LiFePO4

Table 3. Mechanical specifications

3.2.3. Charge & discharge specifications

Charge method	CCCV
Charge voltage	14.3V - 14.6V
Max charge current	90A
End of discharge voltage	8V
Discharge current continous	Max. 200A
Discharge pulse current (10 sec)	350A

Table 4. Charge and discharge specifications

3.2.4. Temperature specifications

Charge temperature	-10°C to 45°C / 14°F to 113°F[1]
Discharge temperature	-20°C to 60°C / -4°F to 140°F
Storage temperature short term (<1 month)	-10°C to 35°C / 14°F to 95°F
Storage temperature long term (>1 month)	18°C to 28°C / 64°F to 82°F[2]
Relative humidty	10-90%

Table 5. Temperature specifications

[1]When temperature is < 0°C / 32°F and > 45°C / 113°F performance will be degraded. Charging rate between 0°C / 32°F and -10°C / 14°F will become 400mA and 8A between 45°C / 113°F and 60°C / 140°F

[2]Long term exposure to temperatures >35°C / 95°F might affect battery capacity and cycle life.

3.2.5. Compliance specifications

Certifications	CE, FCC, UN 38.3, UN ECE R10.05
Shipping classification	UN 3480

Table 6. Compliance specifications

3.2.6. General product specifications

Battery designation	IFpR19/67[60p4s]M/-20+60/90
Cycle life	>5000 (0.3C charge/discharge, DoD 100%)[3] >2000 (1C charge/discharge, DoD 100%)[3]

Table 7. General product specifications

[3]The cycle life value given above is an indication at 23°C. The Li-ion battery cycle life depends strongly on temperature and the applied charging and discharging loads.

3.3. Environmental conditions

⚠ **Warning!** The Li-ion battery may only be used in conditions specified in this manual. Exposing the Li-ion battery to conditions outside the specified boundaries may lead to serious damage to the product and/or the user.

Use the Li-ion battery in a dry, clean, dust free, well ventilated space. Do not expose the Li-ion battery to fire, water, solvents or excessive heat.

3.4. Scope of delivery

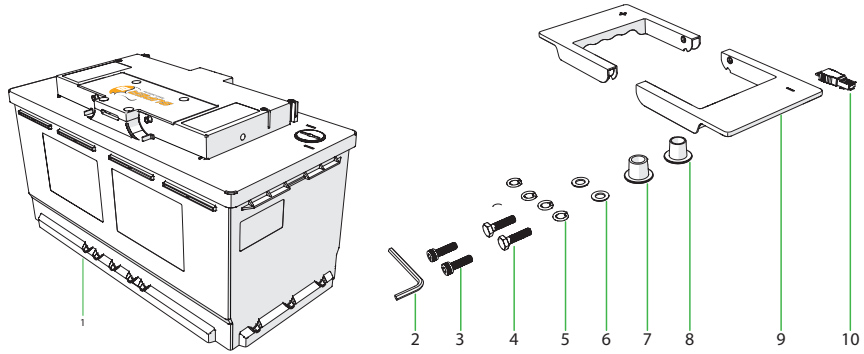

Figure 1. Components

1. (1x) Super B Epsilon 12V90Ah Li-ion battery
2. (1x) Tool (combined 2.5mm/6mm Allen key)
3. (2x) Allen Bolt M8 x 20mm
4. (2x) Hex bolt M8 x 16mm
5. (4x) Spring washer M8
6. (2x) Plain washer M8
7. (1x) Removable automotive battery pole positive
8. (1x) Removable automotive battery pole negative
9. (2x) Removable handles
10. RJ45 CAN Termination resistor

3.5. Connections, indicators and battery controls

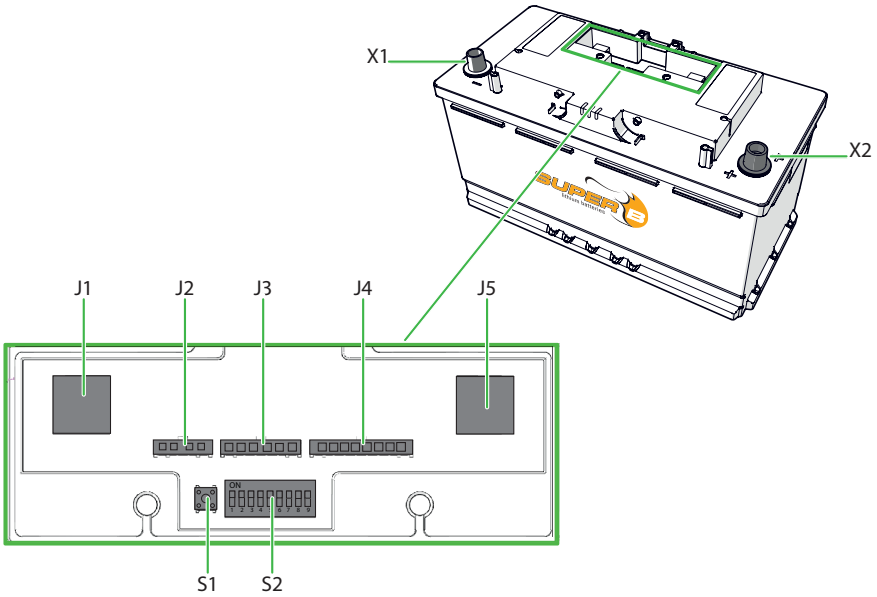

Figure 2. Connections, indicators and battery controls

J1: RJ45 (CAN1)
J2: Inputs 4 Pins
J3: Monitor 6 Pins
J4: Outputs 8 Pins
J5: RJ45 (CAN2)
S1: Push Button
S2: Configuration switch
X1: Battery Terminal up to 1x 95mm2 wire connection or standard automotive terminal
X2: Battery Terminal up to 1x 95mm2 wire connection or standard automotive terminal

3.5.1. J1 / CAN1 (RJ45)

PIN #	Service description	Function
1	CAN High	Communication
2	CAN Low	Communication
3	CAN Ground	Communication
4	Not Connected	-
5	Not Connected	-
6	CAN Shield	-
7	Not Connected	-
8	CAN Power	Looped through and not used by Li-ion battery

Table 8. CAN 1 / J1 interface

3.5.2. J2 Inputs (WR-MPC3 3mm Male Header)

PIN #	Service description	Function Range	Range
1	IN 1A	For future use	+ (0...60Vdc)
2	IN 1B	For future use	-
3	IN 2A	Storage mode (See chapter 7)	+ (0...60Vdc)
4	IN 2B	Storage mode (See chapter 7)	-

Table 9. Inputs J2

3.5.3. J3 Monitor (WR-MPC3 3mm Male Header)

PIN #	Service description	Function	Range
1	Battery +	Power	+ (5... 18Vdc)
2	State of Charge (SoC)	SoC Indication	0...10Vdc
3	Not Connected	-	-
4	Not Connected	-	-
5	LIN	For future use	-45...+45Vdc
6	Battery -	Power	-

Table 10. Monitor J3

3.5.4. J4 Outputs (WR-MPC3 3mm Male Header)

PIN #	Service description	Function	Range
1	OUT 1A	Generator control[1]	-60...+60Vdc (100mA continously)
2	OUT 1B	Generator control[1]	-60...+60Vdc (100mA continously)
3	OUT 2A	Inverter control[2]	-60...+60Vdc (100mA continously)
4	OUT 2B	Inverter control[2]	-60...+60Vdc (100mA continously)
5	OUT 3A	For future use	-60...+60Vdc (100mA continously)
6	OUT 3B	For future use	-60...+60Vdc (100mA continously)
7	OUT 4A	For future use	-60...+60Vdc (100mA continously)
8	OUT 4B	For future use	-60...+60Vdc (100mA continously)

Table 11. Outputs J

[1]Generator control will activate when SoC <=20% and will turn off when SoC is >99%

[2]Inverter control will activate when SoC >20% and will turn off when SoC is <=10%

3.5.5. J5 / CAN 2 (RJ45)

PIN #	Service description	Type of signal to the product
1	CAN High	Communication
2	CAN Low	Communication
3	CAN Ground	Power
4	Not Connected	-
5	Not Connected	-
6	CAN Shield	EMC
7	Not connected	-
8	CAN Power	Looped through and not used by Li-ion battery

Table 12. CAN 2 / J5 interface

3.5.6. S1 Push button

Service description	Type of signal to the product	Usage
Switch	Input	Single push: reset error /wake up battery Double push: initiate Bluetooth bonding

Table 13. Switch S1

3.5.7. S2 Configuration Switch

	CAN			Undefined / Spare					Protocol
	Switch 1	Switch 2	Switch 3	Switch 4	Switch 5	Switch 6	Switch 7	Switch 8	
1	Off	Off	Off	Off	Off	Off	Off	Off	CAN communication disabled[1]
2	Off	On	Off	Off	Off	Off	Off	Off	CANopen enabled

Table 14. CAN Protocol Configurations
[1]When CANopen is switched off, the Li-ion battery will consume less power, see chapter 5.3

3.5.8. X1 / X2, Battery terminals

PIN #	Service description	Range	Function
1	Battery - Terminal	-	Minus supply of battery
2	Battery + Terminal	+ (14.6Vdc)	Plus supply of battery

Table 15. Battery terminal interface

3.5.9. Bluetooth

Service description	Type of signal to the product	Range
Bluetooth	Communication	10 meter (class 2)

Table 16. Bluetooth

3.5.10. LED Indicators

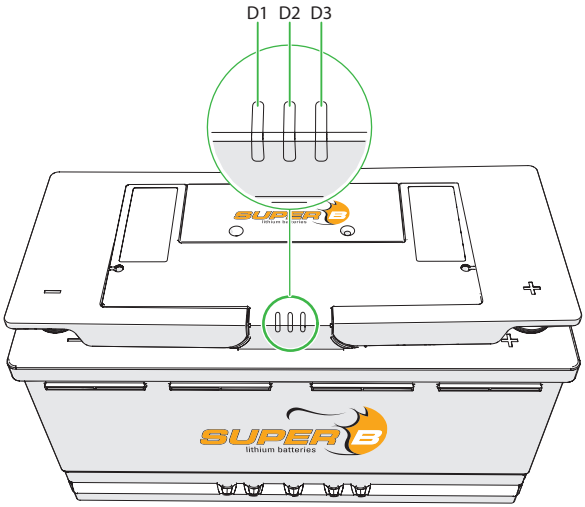

Figure 3. LED Indicators

	D1 (Green)	D2 (Yellow)	D3 (Red)	Mode
1	Off	Off	Off	Empty / Deep discharge/ Storage mode
2	Off	Off	On	Alarm mode
3	On	Off	Off	Operational mode
4	Off	On	Off	Warning mode

Table 17. LED Mode

When the Li-ion battery is in operational mode “not charging or discharging”, LED indicator flashes every 3 seconds (see for more information Chapter 10 Troubleshooting).
The Green and the Red leds will flash 10 times before the Li-ion battery goes to Empty/Deep discharge/ Storage mode.

Note: The Yellow LED can be used to check the status of the Bluetooth module when running the Epsilon v2.7.0 firmware. During live update of the Bluetooth module, the Yellow LED will blink twice in quick successions at every 0.5 second interval repeatedly. If there is an error with the Bluetooth module or during initialization, the Yellow LED will blink twice in quick successions at every 5 second interval repeatedly

3.5.11. Operational modes

Empty mode
The Li-ion battery voltage is below 10V.

Deep discharge mode
One of the Li-ion battery cellblocks is below 1.5V. This is even possible when the Li-ion battery is at 10V. The Li-ion battery will store the state internally. The Li-ion battery is not usable anymore.

Storage mode
The Li-ion battery was set to storage mode manually.

Alarm mode
The BMS detects a failure or is used outside its specification. If a critical alarm occurs during operational mode, the mode management function goes to alarm mode.

Operational mode
The Li-ion battery is fully operational. No error is detected.

Warning mode
The Li-ion battery parameters are out of specified limit(s)

3.5.12. System components operation modes dependencies

Operating mode	Protective disconnect device	Communication*	BMS
Configuring mode	Open	Yes	Active
Operational mode	Closed	Yes	Active
Alarm mode	Open	Yes	Active
Empty / Deep discharge	Open	No	Inactive
Storage mode	Open	No	Inactive

Table 18. System components operation modes dependencies (*communication is dependent of configuration switch setting)

2.8. Optional Components

Article name	EAN code
Display BM01 12V/24V	8718531361041
Cable 5m for display BM01 Epsilon 12V90Ah	8718531361355
Cable 10m for display BM01 Epsilon 12V90Ah	8718531361362
Touch display + Cable 5m for Epsilon 12V90Ah	8718531361454
Sleep Button + Cable 2m for Epsilon 12V90Ah	8718531361515
Sleep button extension cable for Epsilon 12V90Ah	8718531362079
RJ45 Terminator	8718531361331
RJ45 cable 1 m	8718531361386

Table 19. Optional components that can be used with the Li-ion battery

4. Installation

4.1. General information

⚠ **Warning! 12V systems only.** Never install multiple Li-ion batteries in series.
⚠ **Warning!** Never install or use a damaged Li-ion battery.
⚠ **Caution!** Do not reverse connect the power cables (polarity)

When connecting several batteries in parallel, always use batteries of the same brand, type, age, capacity and state of charge.

4.2. Unpacking

Check the Li-ion battery for damage after unpacking. If the Li-ion battery is damaged, contact your reseller or Super B. Do not install or use the Li-ion battery if it is damaged!

4.3. Preparing the Li-ion battery for use

⚠ **Caution!** Do not operate the Li-ion battery beyond published maximum specifications.
⚠ **Caution!** Charging at deep discharge conditions can lead to venting, excessive heat or thermal runaway of the cells.
⚠ **Caution!** This Li-ion battery stores fault conditions internally, like excessive charge current or deep discharge situations. Super B uses this information in the warranty process.
⚠ **Warning!** Do not overcharge the Li-ion battery.

4.3.1. Placement of the Li-ion battery

Before it is used, the Li-ion battery must be positioned in such a way that it will not move around in its compartment during use. Use appropriate LN5 fastening brackets for mounting.

4.3.2. Set the Li-ion battery in normal operation mode

The Li-ion battery is pre-programmed in storage mode. Before it is used, the Li-ion battery must be set up in normal operation mode.
The Li-ion battery can be set to normal operation mode by one of the following procedures:

- Press the S1 Push button for 2 seconds.
- Connect the Li-ion battery to the charger (see Chapter 5.2 Charging).
- Charge the Li-ion battery before use.

4.4. Connection wires

Use appropriate wire for the connection wires to prevent overheating and unnecessary losses. Use appropriate fuses matching the wires and load. Super B suggests to use a 95mm2 connection wires. Connection wires with smaller diameters can cause overheating or unnecessary losses.

4.4.1. Connecting power cables with automotive type terminals

1. Connect the load or charger to the X2 (+) terminal of the Li-ion battery. (Figure 4)

⚠ **Warning!** Do not connect the X1 (-) terminal first as this may lead to short circuits.

2. Connect the load or charger to the X1 (-) terminal of the Li-ion battery. (Figure 4)
3. Ensure both contacts are tightened. (20nm)
4. Place the handle covers over the terminals. (Figure 5)

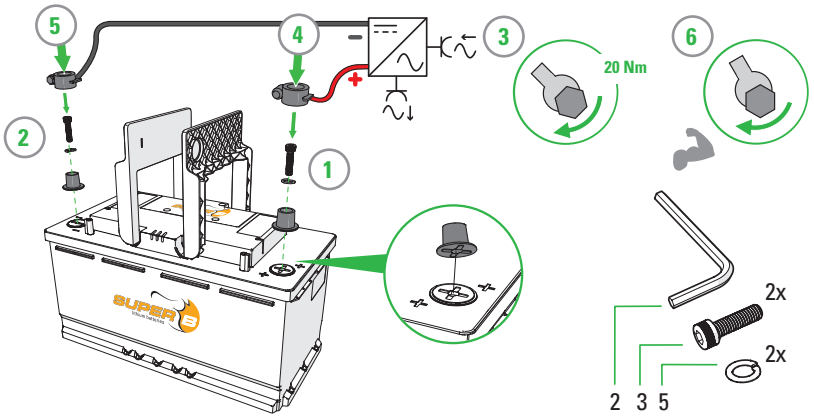

Figure 4. Connecting power cables with automotive type terminals

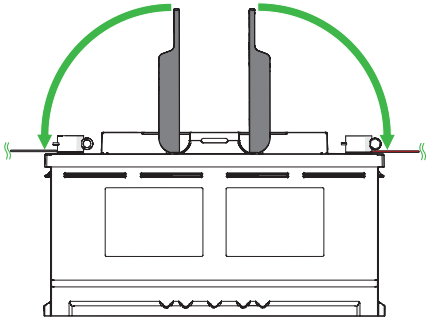

Figure 5. Place the handle covers over the terminals

4.4.2. Connecting shrink fit type of power cables

1. Remove the automotive power terminals. (Figure 6)
2. Connect the load or charger to the X2 (+) terminal of the Li-ion battery. (Figure 7)
   Use the included M8 bolt, spring washer and plain washer to connect the Li-ion battery cable.

⚠ **Warning!** Do not connect the X1 (-) terminal first as this may lead to short circuits.

3. Connect the X1 (-) terminal of the Li-ion battery. (Figure 7)
   Use the included M8 bolt, spring washer and plain washer to connect the Li-ion battery cable.
4. Ensure both contacts are tightened to 20Nm.
5. Place the handle covers over the terminals. (Figure 8)

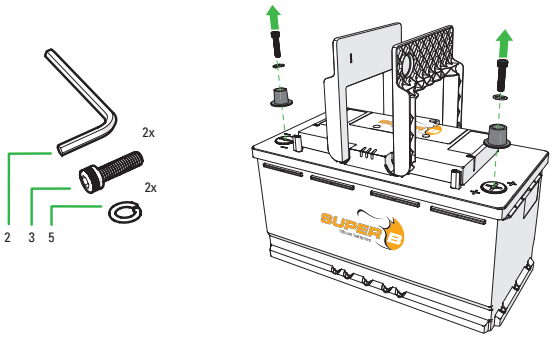

Figure 6. Remove the automotive power terminals.

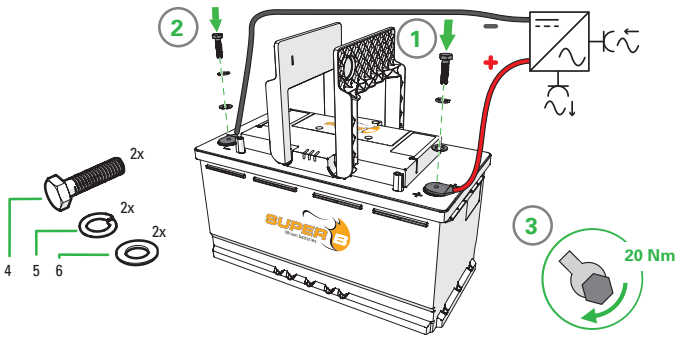

Figure 7. Connecting shrink fit type of power cables

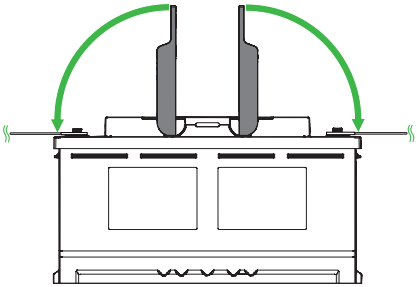

Figure 8. Place the handle covers the terminals

4.4.3. Connecting power cables with automotive type terminals and caps

1. Remove the handle covers.
   a) Lift the handles 30°. (Figure 9)
   b) Remove the handles by pulling them outwards. (Figure 10)
2. Connect the load or charger to the X2 (+) terminal of the Li-ion battery. (Figure 11)

⚠ **Warning!** Do not connect the X1 (-) terminal first as this may lead to short circuits.

3. Connect the load or charger to the X1 (-) terminal of the Li-ion battery. (Figure 11)
4. Ensure both contacts are tightened.
5. Place the accessory caps over the terminals. (Figure 12)

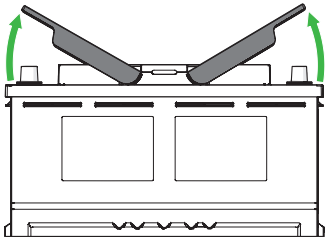

Figure 9. Lift the handles 30°.

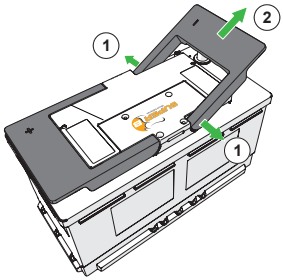

Figure 10. Remove the handles by pulling them outwards.

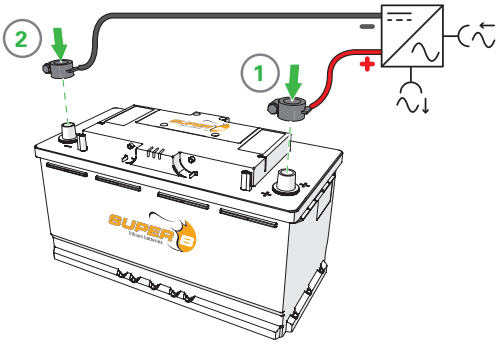

Figure 11. Connecting power cables with automotive type .

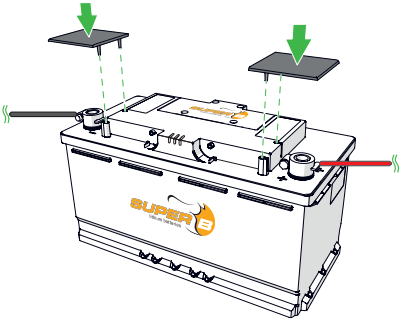

Figure 12. Place the accessory caps over thet terminals. Accessory caps are not provided by Super B

4.5. Connecting to the CAN interface (RJ45)

4.5.1. Connecting the data cables

The wired communication interface must be used in a bus network topology (Table 20). Do not use a ring- or a star topology. The wired communication interface specifications restrict the Bus length/Bus speed.

Bus length (L)	Max. stub length (S)	Accumulated stub length
250 m	11 m	55m

Table 20. Wired network interface cable lengths

CAN Cables

Use a standard UTP cable to connect the Li-ion battery to your application.

Termination Resistors

A high-speed bus requires termination at the two ends of the bus.
Use termination resistors at the end nodes to impede reflections on the line. The value of this resistor should be +/- 120 ohms.

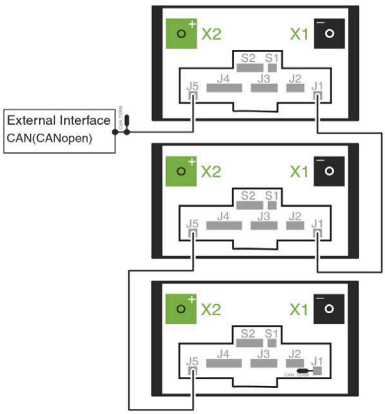

Figure 13. Example of connecting the data cables of 3 batteries with an external Interface (3x CAT5e FTP network cable, 2x RJ45 Terminators)

4.6. Connecting a charger to the Li-ion battery

⚠ **Warning!** Ensure you have completed all the previous steps described in chapter 4 before connecting the Li-ion battery to the charger.

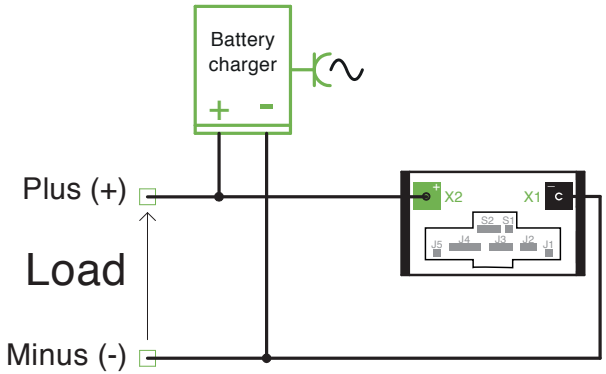

Figure 14. Connecting a charger to the Li-ion battery

4.7. Connecting Li-ion batteries in parallel

The max. number of Li-ion batteries in parallel is 8. To divide the current equally amongst batteries, use the schematic bellow:

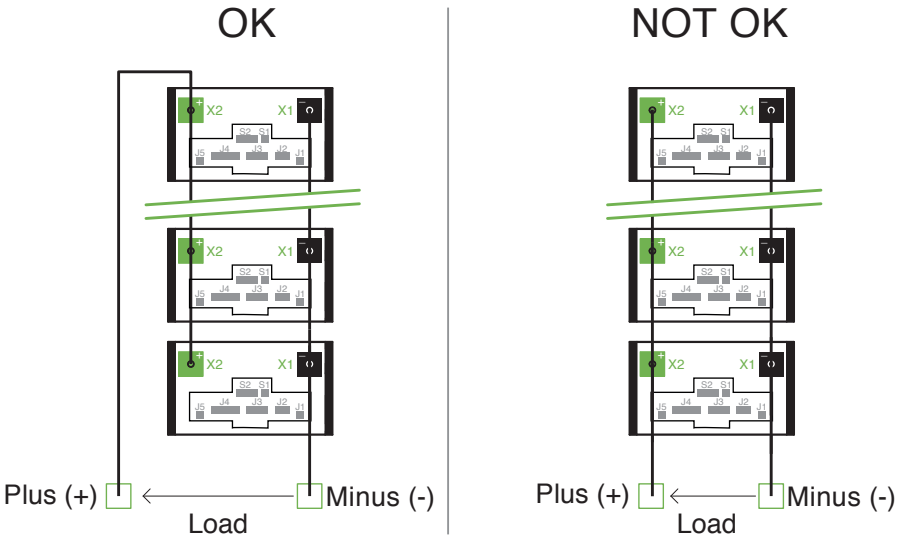

Figure 15. Connecting Li-ion batteries in parallel

OK: Equally divided battery current.
All batteries contribute equally to the current into the load.

NOT OK: Current not equally divided.
Batteries closest to load will have the highest contribution to the current into the load.
Whereas batteries further away from load will have lesser current contribution.
Wear and tear will be higher on the battery close to the load.

4.8. Disconnecting the Li-ion battery

1. Turn off any device or charger the Li-ion battery is connected to.
2. Disconnect the negative wire from the - terminal of the Li-ion battery.
3. Disconnect the positive wire from the + terminal of the Li-ion battery.

5. Battery use

5.1. General information

⚠ **Warning!** Follow the safety guidelines and measures of chapter 1.
⚠ **Caution!** Charge the Li-ion battery before use.

5.2. Charging

⚠ **Warning!** Never charge the Li-ion battery with a charging current larger than 1C.
⚠ **Warning!** Stop charging in case the Li-ion battery switches into warning mode.
⚠ **Caution!** Disconnect the charger from the Li-ion battery if it is not used for a long time.
⚠ **Caution!** When charging via an externally driven alternator, it must be ensured that an optimal charging curve charges the Li-ion battery (see for instructions the charging manual which can be found on the Super B website). For this, the use of a charge converter (DC/DC booster) is indispensable.
⚠ **Caution!** To charge the Li-ion battery, use a charger which follow Super B's charging profile (see charging manual which can be found on the Super B website).
1. Connect the charger to the Li-ion battery as described in paragraph 4.6.
2. Charge the Li-ion battery in case of an under-voltage shutdown or if the state of charge drops below 20% to preserve the lifespan of the Li-ion battery.

5.2.1. Charging rate

The Li-ion battery can be charged in approximately 1 hour. Displayed in Table 21 are the charge times for the Li-ion battery at different charge currents. Always use the indicated charge current and end of charge voltage during charging.

Charging rate		
	Time	Charge current
Maximum	1 hour	1C (90A)
Endurance lifecycle	3 hours	C3 (30A)

Table 21. Charging rates at different charge currents

5.2.2. Battery balancing

The BMS automatically balances the cells if necessary. The Li-ion battery can be used normally during balancing. Balancing ensures all cells are at the same voltage level and enhances usable battery capacity.

5.3. Li-ion battery self consumption

When CANopen communication is switched on, the Li-ion battery consumes more energy. (see paragraph 3.5.7 Configuration Switch)

Communication setting	Li-ion battery self consumption
CAN communication enabled	0.7 Ah per day
CAN communication disabled	0.4 Ah per day

Table 22. Li-ion battery self consumption

5.4. Battery History Recording

The complete Li-ion battery history is stored inside the Li-ion battery and can be accessed by your reseller or by Super B.

6. Inspection and cleaning

6.1. General information

⚠ **Warning!** Never attempt to open or dismantle the Li-ion battery! The inside of the Li-ion battery does not contain serviceable parts.

1. Disconnect the Li-ion battery from all loads and charging devices before performing cleaning and maintenance activities (see paragraph 4.8).
2. Place the enclosed protective caps over the terminals before cleaning and maintenance activities to avoid the risk of contacting the terminals.

6.2. Inspection

1. Inspect for loose and/or damaged wiring and contacts, cracks, deformations, leakage or damage of any other kind. If damage to the Li-ion battery is found, it must be replaced. Do not attempt to charge or use a damaged Li-ion battery. Do not touch the liquid from a ruptured

Li-ion battery.

2. Routinely check the Li-ion battery's SoC. When not in use or stored (see paragraph 5.3): cell self-discharge (<3% per month) plus BMS consumption (see datasheet).
3. Consider replacing the Li-ion battery with a new one if you note either of the following conditions:
   - The Li-ion battery run time drops below about 80% of the original run time.
   - The Li-ion battery charge time increases significantly.

6.3. Cleaning

If necessary, clean the Li-ion battery with a soft, dry cloth. Never use liquids, solvents, or abrasives to clean the Li-ion battery.

7. Storage

Follow the storage instructions in this manual to optimize the lifespan of the Li-ion battery during storage. If these instructions are not followed and the Li-ion battery has no charge remaining when it is checked, consider it to be damaged. Do not attempt to recharge or use it. Replace it with a new Li-ion battery.
See chapter 3.2.4 for storage temperature conditions.
Cell self-discharge: <3% per month, plus BMS consumption (see datasheet).

⚠ Warning! Always set the Li-ion battery in storage mode before storage.

The Li-ion battery can be set in storage mode via the BeInCharge mobile application or by using the external "push button".

1. Charge the Li-ion battery to > 80% of its capacity before storage.
2. Disconnect the Li-ion battery from all loads and, if present, the charging device.
3. Set the Li-ion battery in storage mode.
4. Place the terminal covers over the Li-ion battery's terminals during storage.
5. Charge the Li-ion battery to > 80% of its capacity every 100 days. After charging ,set the Li-ion battery in storage mode again.

8. Transportation

Always check all applicable local, national, and international regulations before transporting a Li-ion Iron Phosphate battery.

Transporting an end-of-life, damaged, or recalled Li-ion battery may, in certain cases, be specifically limited or prohibited.
The transport of the Li-ion battery falls under hazard class UN3480, class 9. For transport over water, air and land, the Li-ion battery falls within packaging group PI965 Section II.

9. Disposal and recycling

Always discharge the Li-ion battery before disposal. Use electrical tape or other approved covering over the Li-ion battery connection points to prevent short circuits.
Li-ion battery recycling is encouraged. Dispose of the Li-ion battery in accordance with local, state and federal laws and regulations.

10. Troubleshooting

Problem	Possible situation	Solution
The Li-ion battery cannot be discharged.	Li-ion battery is in operation mode Green LED is lit or flashing. (Chapter 3.5.10)	Check the installation of the Li-ion battery.
	Li-ion battery is in storage mode. No LED is lit or flashing (Chapter 3.5.10)	Charge the Li-ion battery or Press the S1 Push button for 1 second.
	Li-ion battery is in storage mode because it is empty. No LED is lit or flashing. (Chapter 3.5.10)	Charge the Li-ion battery.
	Red LED is flashing: alarm mode is active. The temperature of the Li-ion battery is too high. (Chapter 3.5.10)	Disconnect the Li-ion battery from load/ charger and wait for it to cool down.
	Red LED is flashing: alarm mode is active. The discharge currents or too high. (Chapter 3.5.10)	Apply charge current or press the S1 push button.
The Li-ion battery cannot be charged.	Li-ion battery is in operation mode. Green LED is lit or flashing.(Chapter 3.5.10)	Check the installation of the Li-ion battery.
	Li-ion battery is in alarm mode because the charging voltage is too high. Red LED is lit or flashing. (Chapter 3.5.10)	Verify that the charging voltage is within the Li-ion battery specifications. (Chapter 3.2) Discharge the Li-ion battery or press the S1 push button for 1 second.
	Li-ion battery is in alarm mode because of high temperature. Red LED is lit or flashing. (Chapter 3.5.10)	Disconnect the Li-ion battery from load/ charger and wait for it to cool down.
	Li-ion battery is in alarm mode because of too high charge current. Red LED is lit or flashing (Chapter 3.5.10)	Discharge the Li-ion battery or press the S1 push button

The capacity of the Li-ion battery has decreased.	The cells within the Li-ion battery are not properly balanced or the Li-ion battery is worn out.	Perform one full charge (100% SoC) cycle to balance the cells.
Bluetooth errors / connection problems	Connection rejected	Remove Bluetooth pairing from device settings. Verify no other device is using the Bluetooth connection.
	Cannot put the Li-ion battery in storage mode	Make sure the device is bonded by double pressing the S1 push button
	Update takes very long	Solved when using software >2.5.0
	App can't find the Li-ion battery	Make sure the Li-ion battery is not in sleep / storage mode. Li-ion batteries using older software (<2.5.0) are susceptible for having connection issues. Try resetting the Li-ion battery by using the sleep button attached to connector J2.
Touch display errors	Touch display show CAN error	Ensure the dip switch is set correctly (1 down, 2 up, 3 down). Make sure the CAN bus is terminated by the orange terminator.
	Touch display doesn't show all batteries in bank but does not show an error	Go to the settings menu and press 'Start scan'.
	Touch display alternates SoC of two batteries instead of showing them seperately	Two batteries have the same CAN ID. (1) Set Dipswitch 8 to ON, put the Li-ion battery to sleep. (2) Set Dipswitch 8 to OFF, wake up the Li-ion battery. (3) Touch display: go to the settings menu and press 'Start scan'

Table 23. Troubleshooting

11. Warranty and liability

No rights can be derived from this document. Any installation or use contrary to these instructions may void the warranty granted to you. Please refer to the sales agreement for warranty and other provisions applicable to your purchase. If the product is defective, please contact the dealer, reseller or retailer that you purchased the product from. Super B's liability for any of its products is limited to the corresponding provisions under mandatory applicable law.

SUPER B
lithium batteries

For more information please contact:

Super B Lithium Power B.V.
Europalaan 202
7556 SC Hengelo (Ov)
The Netherlands

Tel: +31 (0)88 0076 000
E-mail: info@super-b.com
www: www.super-b.com

Manual September 2022