EVERGRATE
A DIVISION OF JR HOE

EVERGRATE TRENCH DRAIN ORDERING GUIDE

Steel trench frame segments are supplied in standard lengths from 2'–6' in 6" increments. Cast iron trench grates are supplied in 18" and 24" standard lengths. By combining these standard frame and grate elements, trench runs can be configured to any overall length that is a multiple of 6".

FRAMES

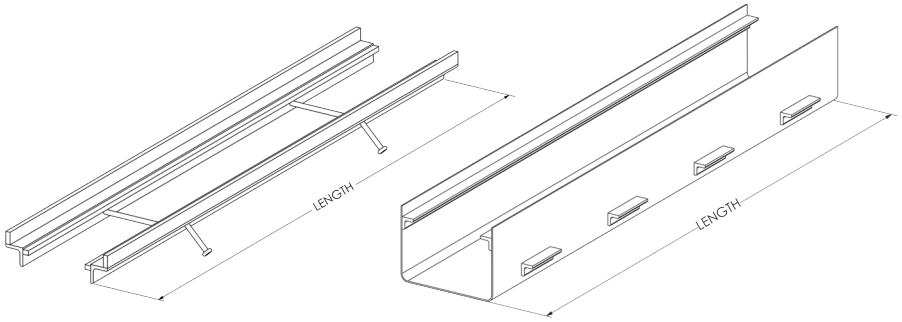

ANGLE FRAME CHANNEL FRAME

Steel trench frame segments are manufactured in the following standard lengths:
2', 2'6", 3', 3'6", 4', 4'6", 5', 5'6", 6'

GRATES

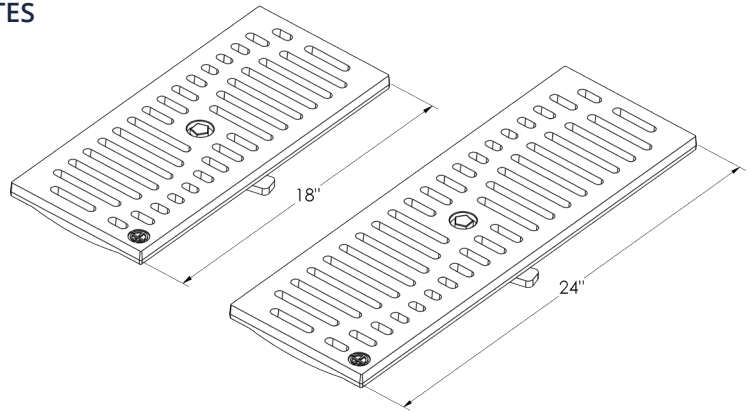

Cast iron trench grates are manufactured in the following standard lengths:
18", 24"

** Trench runs that do not fall on a 6" multiple are considered odd length. For odd-length runs, the purchaser is responsible for ordering sufficient additional length to allow field cutting to fit the required run length.

If downspout boots and/or curb openings are included, linear feet of trench is determined by the space between the front of the downspout boot and/or the back of the curb opening.

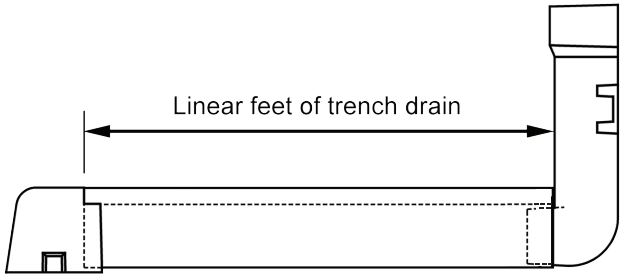

Example with downspout boot and curb opening

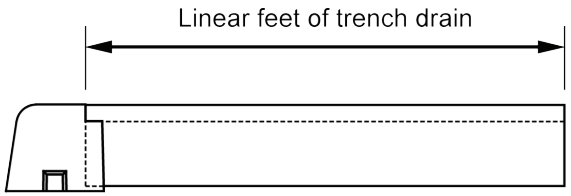

Example with curb opening only

NOTE: Upon placing order for the confirmed total LF of trench drain (determined by customer), Evergrate technical representatives will determine the correct combination of frame segments and trench grates required to fulfill the order based on the specified number of runs and the length of each run.