REQUIRED INFORMATION FROM CONTRACTOR				
STRUCTURE QUANTITY	INLET PIPE SIZE & TYPE	OUTLET PIPE SIZE & TYPE	ACCESS OPENING SIZE	BAFFLE WALL QUANTITY

TANK DIMENSIONS:
INSIDE LENGTH = 12'-3"
INSIDE WIDTH = 7'-4"
OUTSIDE LENGTH = 13'-3"
OUTSIDE WIDTH = 8'-4"

NOTE: CONTRACTOR TO SKETCH IN LOCATIONS OF INLET AND OUTLET PIPES AS WELL AS LOCATIONS OF ACCESS OPENINGS

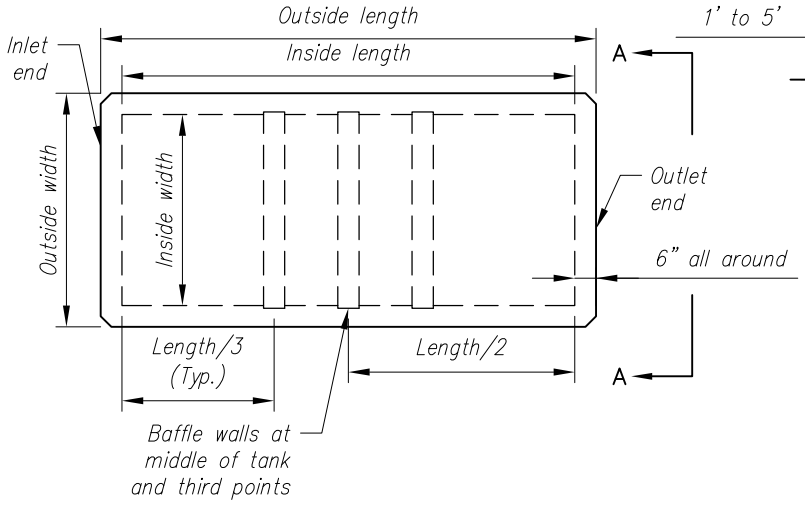

PLAN

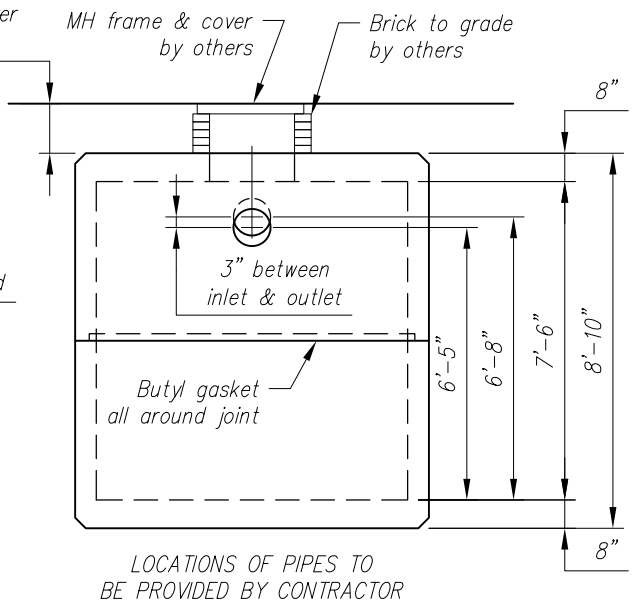

ELEVATION A-A

WEIGHTS (MAX.)		
UPPER SECTION	11.31	TONS
LOWER SECTION	11.31	TONS
BAFFLE WALL (EACH)	1.34	TONS

Design Parameters:
- Live Load: AASHTO HS20-44
- Earth Cover: 1' to 5'
- Concrete: Design strength f'c = 5000 psi
  Unit weight = 150 pcf
- Reinforcing: ASTM A615 Grade 60
- Earth Pressure Coefficient = 0.30
- Soil: Unit weight = 120 pcf
- Cover to reinforcing: 1 1/2" u.n.o.

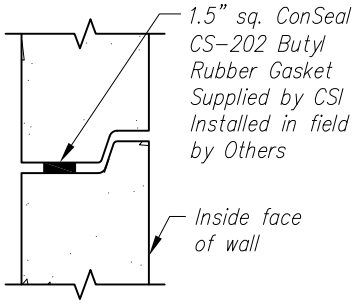

JOINT DETAIL

4,000 GALLON HEAVY DUTY TANK

CONTRACTOR:	Contract No.
ENGINEER:	Date
JOB:	Drawing No. HT4K
LOCATION:	Revision

Concrete Systems Inc.
9 Commercial St., Hudson, NH,03051
Phone 603-889-4163
Fax 603-889-0039