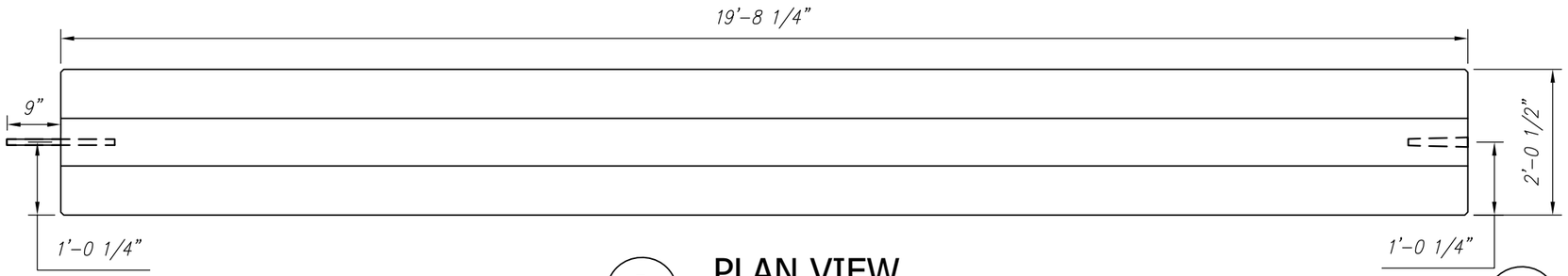

PLAN VIEW

SCALE: 1/2" = 1'-0"

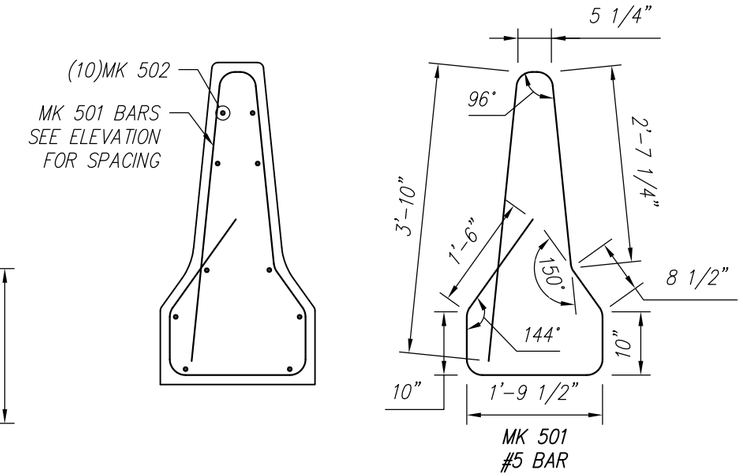

REINFORCING SECTION

SCALE: 1/2" = 1'-0"

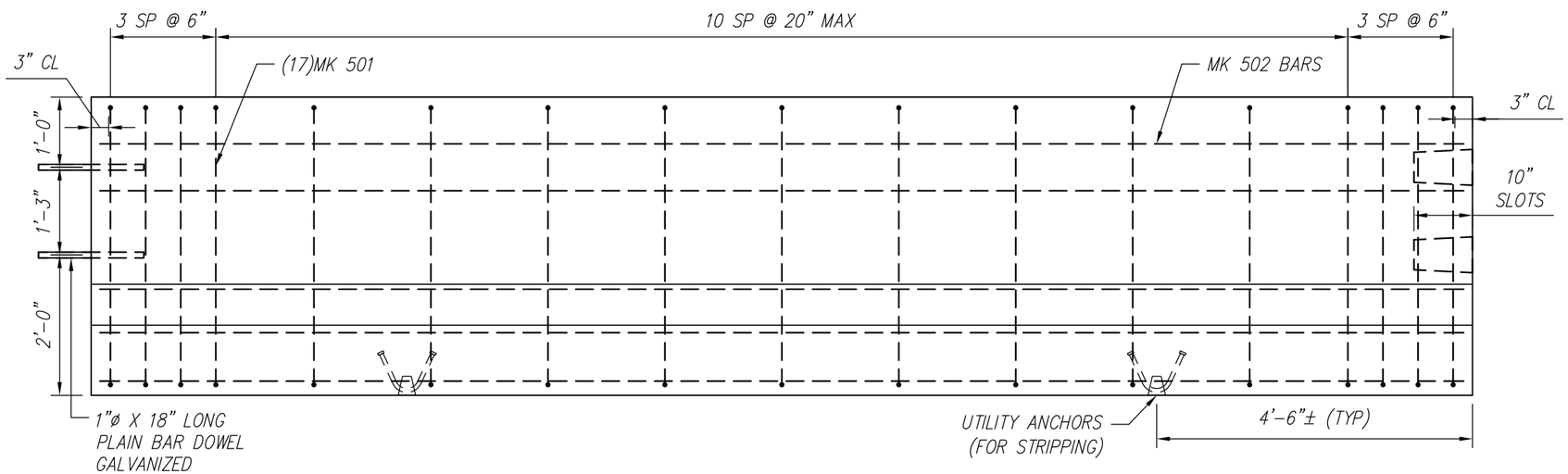

FRONT ELEVATION

SCALE: 1/2" = 1'-0"

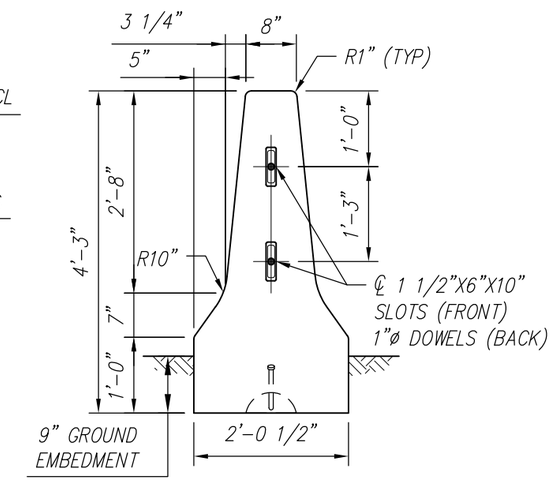

R. END VIEW

SCALE: 1/2" = 1'-0"

GENERAL NOTES:

1. CONCRETE STRENGTH F'C = 5000 PSI HP
2. REINFORCING STEEL: ASTM A775 (REBAR) GR 60, EPOXY COATED.
3. COVER TO REINFORCING: 1 1/2" U.N.O.
4. PER MASSDOT STANDARDS E402.10.0, E402.11.0 AND E402.13.0

FEDERAL AID PROJECT NO.
PROJECT FILE NO.

Rev.	Date	DESCRIPTION	By
5			
4			
3			
2			
1			

REVISIONS

CSI
Concrete Systems Inc.
9 Commercial St., Hudson, NH,03051
Phone 603-889-4163
Fax 603-889-2417

STATE AGENCY

massDOT Moving Massachusetts Forward. Highway

Drawn By	Date
Concrete Cu. Yd. 4.01	Weight in Tons 8.13
Approved By	Date

B

DOUBLE FACE F SHAPE TALL BARRIER

Drawing No. DFF6201295PMA-1

REV 0

Quantity: | Project No: | SHEET 1 OF 1