MAGNETRON GENERATOR

BPA Series, 100 kW 915 MHz

:fm

GENERAL INFORMATION OF SWITCHED MODE POWER SUPPLY

The BPA100kW is an air-cooled, modular switched-mode power supply (SMPS) engineered for high-power 915 MHz magnetron applications. The system delivers tightly regulated high-voltage DC output with low ripple characteristics, ensuring stable magnetron operation and extended device lifetime.

The fully modular architecture allows scalable power configuration and inherent fault tolerance in the event of a module-level failure, the system continues operating with automatic power derating, preserving process continuity and minimizing downtime. Advanced digital control algorithms continuously regulate anode voltage, anode current, filament supply, and electromagnet current to precisely maintain the magnetron operating point, with fast and reliable response to all abnormal conditions. Each 19-inch rack module (5U height) is self-cooled and independently replaceable, ensuring high availability in demanding industrial environments.

FEATURES

- Air-cooling high efficiency system up to 97 %, no external water circuit required for the SMPS
- Very low energy discharge under heavy short-circuit fault of magnetron
- Accurate anode voltage and anode current measurement and closed-loop control
- Anode voltage adjustable from 15 kV to 21 kV based on the magnetron performance curve, optimizing efficiency and lifetime
- Cutting-edge resonant switching topology with low output ripple, less than 1 % voltage, less than 2 % current
- Comprehensive protection suite: over/under temperature, over/under voltage, overcurrent, overload, and short-circuit
- High reliability design compliant with MIL-HDBK-338B and MIL-HDBK-217 standards
- Fault-tolerant architecture with no single point of failure, seamless automatic load redistribution
- Cold-swap module replacement in under 5 minutes for rapid field maintenance
- Lower weight and significantly reduced output voltage ripple versus legacy transformer-based generators
- Flexible output power range: adjustable from 10 kW to 100 kW in fine increments
- Compatible with multiple magnetron brands and models
- Industrial communication options: PROFINET, and Modbus TCP

SPECIFICATION ELECTRICAL AND TECHNICAL DATA

	BPA100kW400	BPA100kW480	BPA100kW600	BPA100kW690
Input voltage (Three phase)	400 V_{AC} ± 10 %	480 V_{AC} ± 10 %	600 V_{AC} ± 10 %	690 V_{AC} ± 10 %
Efficiency	up to 96 %	up to 96 %	up to 97 %	up to 97 %
Input frequency	47 Hz to 63 Hz			
Power consumption	145 kVA			
Rated current consumption	209 A	175 A	138 A	118 A
Recommended fuse (NH fuse)	250 A	224 A	160 A	160 A
Output voltage adaptivity	15 kV to 21 kV			
Anode current variation range	0.6 A to 6 A			
Absolute Max. output power	100 kW			
Output voltage ripple	Less than 1 %			
Anode current ripple	Less than 2 %			
Active operating temperature	-20 °C to 50 °C			
Working humidity	20 % to 90 % RH, non-condensing			
Storage temperature, humidity	-30 °C to +70 °C, 10 % to 95 % RH non-condensing			
Withstand voltage	30 kV			
Dimension	2218 mm × 1221.5 mm × 1293 mm			

© 2026 Fricke und Mallah Microwave Technology GmbH
Technical modifications reserved

:fm
Fricke und Mallah Microwave Technology GmbH
Werner-Nordmeyer-Str. 25 I 31226 Peine I Germany
Tel.: +49 (0) 5171 54 57-0 I Fax: +49 (0) 5171 54 57-26
info@microwaveheating.net I www.microwaveheating.net

MAGNETRON GENERATOR

BPA Series, 100 kW 915 MHz

:fm

GENERAL INFORMATION OF MAGNETRON HEAD

The 100 kW / 915 MHz CW magnetron serves as the microwave generation core, coupling energy via an axial antenna into the waveguide. It is driven by the BPA100kW modular SMPS, which regulates anode voltage (15kV to 20 kV) and adaptively controls anode current, filament voltage, and electromagnet field. Acting as the central supervisory controller, the SMPS continuously monitors critical electrical parameters and enforces fast-acting protection against overcurrent and over/under voltage. Its fault-tolerant modular design allows derated operation upon module failure, preserving process continuity without interruption.

To extend magnetron service life, two arc-detection circuits at the waveguide output and isolator trigger immediate power inhibit on fault detection; a high-power isolator dumps reflected power to protect against VSWR transients; mechanical reflected power minimization; and a high-frequency power detector delivers real-time output power data for closed-loop control. Water flow, air flow, and all magnetron electrical parameters are continuously monitored by a PLC fully aligned with the SMPS, ensuring the magnetron head and power supply operate as a single integrated system.

FEATURES

- High-efficiency microwave generation (≈ 85%) at 915 MHz ISM frequency band
- Continuous wave (CW) operation enabling stable and uniform thermal processing
- Fully compatible with modular SMPS architecture for adaptive power control (10 kW to 100 kW)
- Direct-heated tungsten cathode ensuring reliable electron emission and long operational life
- Fast and precise power controllability via coordinated adjustment of anode current and magnetic field
- Optimized for closed-loop operation with high-resolution monitoring of anode voltage and current
- Dual arc detection circuits at the waveguide output and isolator for having immediate power inhibit triggered upon fault detection to prevent magnetron damage
- High-power isolator with reflected power dump to shield the magnetron from load-mismatch and VSWR transients
- Dedicated high-frequency power detector for accurate real-time measurement of magnetron output power, feeding directly into the closed-loop control algorithm
- Stable operation under varying load conditions with defined VSWR tolerance
- Dual cooling concept: water-cooled anode and forced-air cathode for effective thermal management
- External electromagnet configuration allowing flexible control of the magnetron operating point·Industrial-grade reliability suitable for
- continuous high-power applications
- Comprehensive PLC-based monitoring of all magnetron subsystems including water flow, air flow, and electrical parameters with coordinated interlocks and alarm management
- Full control and monitoring alignment between the magnetron head and the BPA100kW SMPS, operating as a single, tightly integrated system
- Compatible with fault-tolerant SMPS enabling derated operation under module failure

SPECIFICATION ELECTRICAL AND TECHNICAL DATA

Operating Mode	Continuous Wave (CW)
Efficiency	83 % to 88 %
Frequency	896 / 915 / 922 / 929 MHz (± 10 MHz variation)
Nominal Output Power	100 kW
Structure	Metal-ceramic
Anode Voltage (typ.)	19.5 kV to 20 kV
Anode Voltage (max.)	20 kV
Anode Current (typ.)	5.8 A to 6.0 A
Filament Voltage	12.0 V to 12.6 V
Filament Current (operation)	65 A to 115 A
Load VSWR	1.1: 1 (circulator required)
Cooling – Anode	Water-cooled
Water Flow Rate	≥ 4 gpm (15 L/min)
Cooling – Cathode	Forced air (≥ 5 cfm cathode, ≥ 40 cfm dome)
Electromagnet Cooling	Water-cooled (external electromagnet)
Typical Electromagnet Current	5 A
Total input water flow	90 L/min
Pressure	5 to 5.5 bar
WR-975 / R9	WR-975 / R9
Flange Type	CPR-975

© 2026 Fricke und Mallah Microwave Technology GmbH
Technical modifications reserved

:fm
Fricke und Mallah Microwave Technology GmbH
Werner-Nordmeyer-Str. 25 I 31226 Peine I Germany
Tel.: +49 (0) 5171 54 57-0 I Fax: +49 (0) 5171 54 57-26
info@microwaveheating.net I www.microwaveheating.net

DIMENSIONS OF SMPS

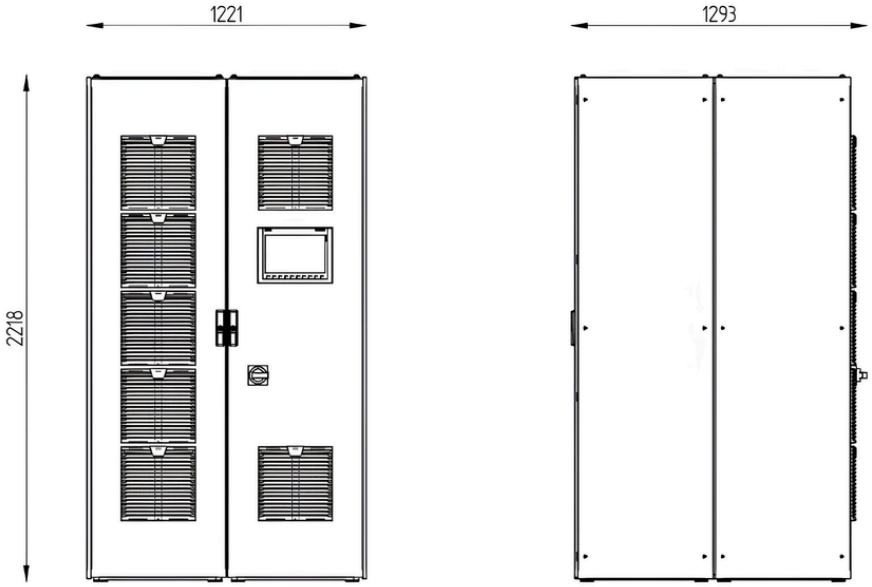

DIMENSIONS OF MAGNETRON HEAD

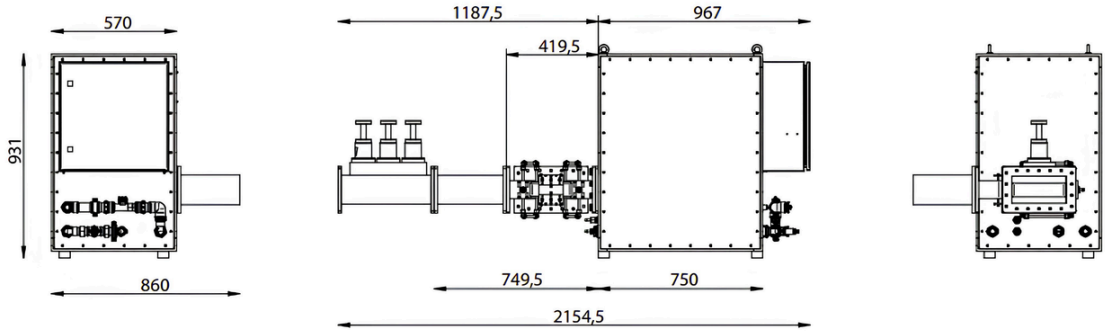

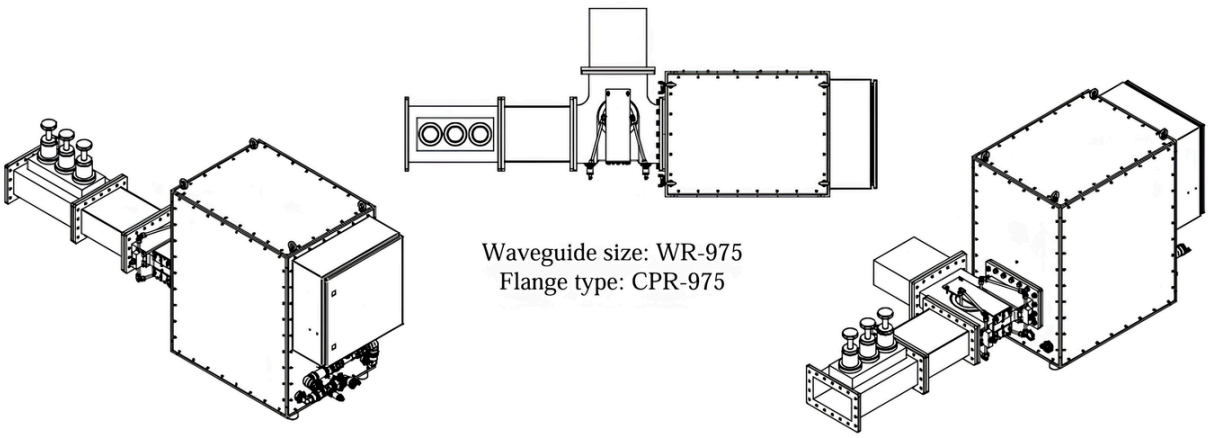

© 2026 Fricke und Mallah Microwave Technology GmbH
Technical modifications reserved

Fricke und Mallah Microwave Technology GmbH
Werner-Nordmeyer-Str. 25 I 31226 Peine I Germany
Tel.: +49 (0) 5171 54 57-0 I Fax: +49 (0) 5171 54 57-26
info@microwaveheating.net I www.microwaveheating.net