HS 5000 / 8000 / 10000 EO

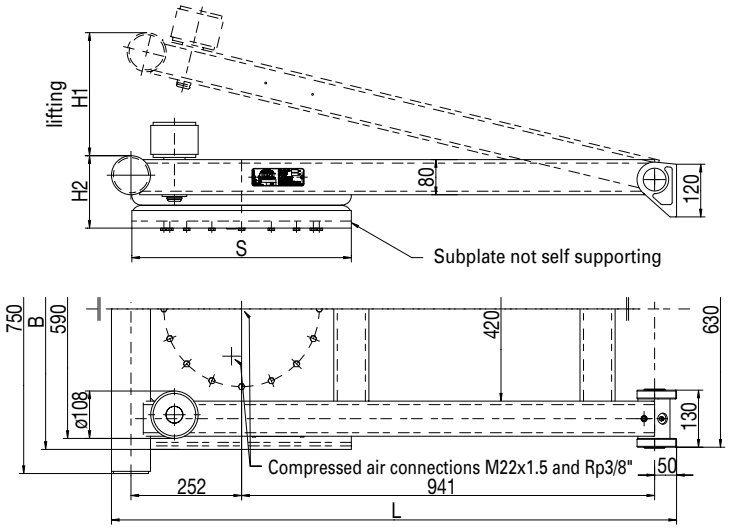

HS 5000 EO

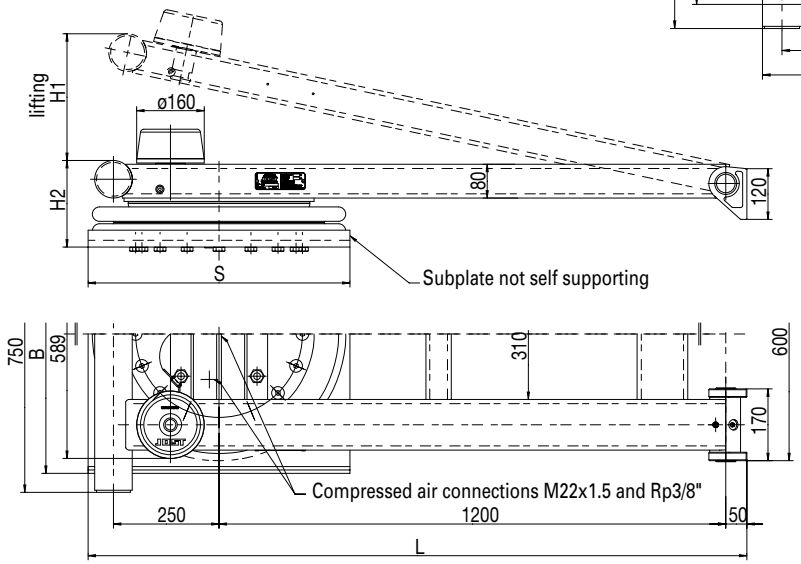

HS 8000 / 10000 EO

Selection table / available versions

Lifting capacity (kN)	Lifting (mm)	H1 (mm)	H2 (mm)	S (mm)	L (mm)	B (mm)	Weight (kg)	Order No.	Drawing No.
50	280	280	165	500	1288	640	100.0	HS 5000 EO	650.002.000
80 **	300	300	205	620	1560	660	146.0	HS 8000 EO	650.007.000
100	400	400	205	710	1605	740	160.0	HS 10000 EO	650.021.000

** 100 kN at a pressure of 0.8 Mpa (8 bar)

Free space of at least 15 mm around moving parts!

Maximum lift height for Swap Body (HS 5000) is 11" (280mm)