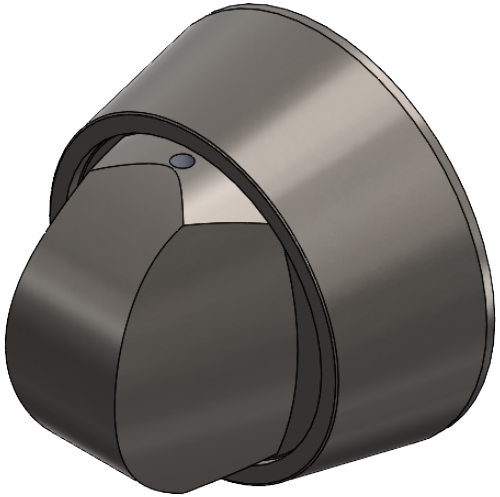

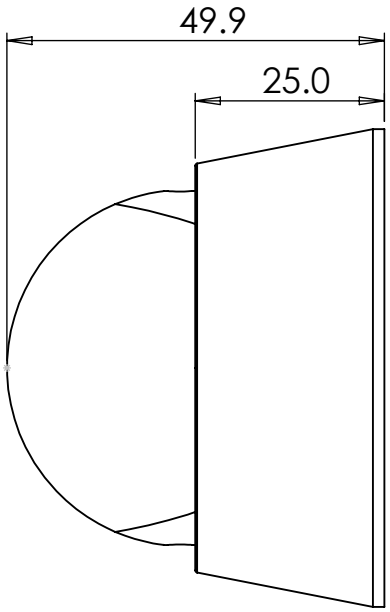

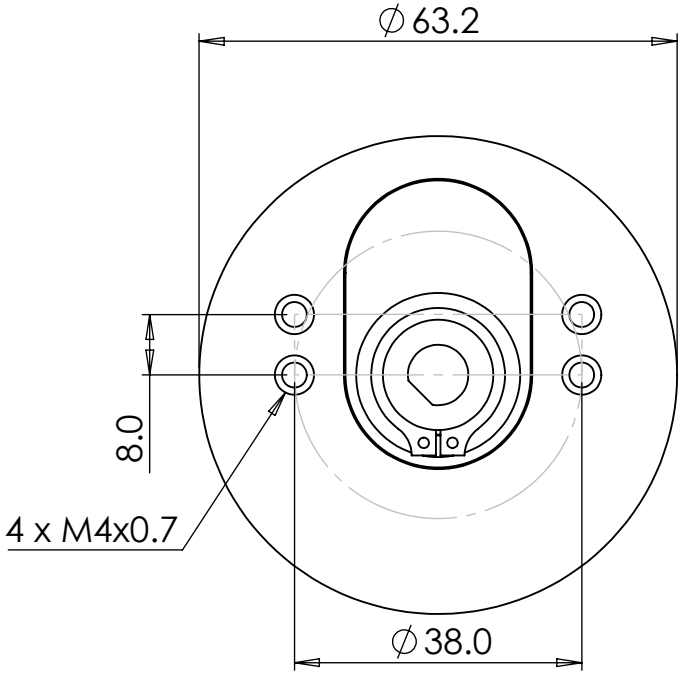

dortrend	FINISH: Satin			DEBURR AND BREAK SHARP EDGES IF IN DOUBT, ASK	DO NOT SCALE DRAWING	REVISION 1
					Dortrend International Ltd	
	NAME	SIGNATURE	DATE	Unless Otherwise Specified: Dimensions in mm Tolerances: Linear: ±0.2 mm Angular: ±0.5°	TITLE: Anti-Ligature Large Bathroom Turn	
DRAWN	P.Roberts		16/10/2024			
CHK'D						
APPV'D						
Dortrend International Ltd 86A Blackpole Trading Estate West Worcester WR3 8TJ				MATERIAL: Stainless Steel	DWG NO. ANTATIFM1	A4
				WEIGHT: 611 g	SCALE:1:1	SHEET 1 OF 1